1 ELECTRICAL DEMOLITON PLAN

SCALE: 1/8"=1'-0"

N

GENERAL NOTES:

A. REFER TO SHEET MEP-1.0 FOR GENERAL NOTES.

B. CONTRACTOR SHALL INCLUDE IN HIS BID TO OWNER MATERIAL AND LABOR REQUIRED TO SEAL ALL ROOF PENETRATIONS WHERE HVAC EQUIPMENT WILL BE COMPLETELY DEMOLISHED. SEAL WITH VAPOR BARRIER WEATHER TIGHT SEALANT.

C. REFER TO PANEL SCHEDULES FOR EQUIPMENT BRANCH CIRCUITS.

D. EXISTING ELECTRICAL PANEL TO REMAIN.

E. ELECTRICAL CONTRACTOR SHALL INCLUDE IN HIS BID TO OWNER MATERIAL AND LABOR REQUIRED TO DISCONNECT EXISTING AIR HANDLING UNIT. REFER TO MECHANICAL CONNECTION SCHEDULE FOR REQUIREMENTS.

KEY NOTES: (#)

1. CONTRACTOR SHALL INCLUDE IN HIS BID TO OWNER MATERIAL AND LABOR REQUIRED TO REPLACE EXISTING DUCT SMOKE DETECTORS. RETURN TO OWNER OR DISCARD AT THE OWNER'S REQUEST.

2. CONTRACTOR SHALL REMOVE EXISTING FEEDERS SERVING POWER TO EXISTING AIR HANDLING UNITS FROM THE UNIT ALL THE WAY TO THE ELECTRICAL PANEL WHERE IT IS BEING CONNECTED FROM. UPDATE-TYPED EXISTING PANEL CIRCUIT DIRECTORY TO IDENTIFY CIRCUIT MODIFICATIONS DONE UNDER THIS CONTRACT AND EXISTING CIRCUIT CONDITIONS.

BID PREPARATION

BASE BID:

BASE BID SHALL INCLUDE ALL BUILDING TRADES WORK ASSOCIATED WITH THE REPLACEMENT OF FAN COIL UNITS, FC-I, & FC-F WITH PACKAGED DX ROOFTOP UNITS, RTU-I, & RTU-F.

ALTERNATE #1:

ALTERNATE #1 SHALL INCLUDE ALL BUILDING TRADES WORK ASSOCIATED WITH THE REPLACEMENT OF FAN COIL UNIT, FC-G, WITH PACKAGED DX ROOFTOP UNIT, RTU-G.

DEMOLITION LEGEND	
//////	DEMOLISH TO BE REPLACED
– – – –	EXISTING TO REMAIN

SIGMAEEN ENGINEERS, PLLC
TBPE Firm No. F-14767
701 S. 15th Street
McAllen, Texas 78501

CITY OF EDINBURG FIRE STATION HVAC IMPROVEMENTS
EDINBURG, TX

STATE OF TEXAS
JOSE ANTONIO NICANOR
108783
LICENSED
PROFESSIONAL ENGINEER
04-17-2019

PROJECT NO.: 19011
ISSUED: 04/17/2019
REVISIONS:

NO.	DATE	DESCRIPTION

DRAWN BY: KA
CHECKED BY: JAN
SHEET TITLE:
ELECTRICAL DEMOLTION PLAN

ED-1.0

MECHANICAL EQUIPMENT CONNECTION

ROOF TOP UNITS		
UNIT MARK	BRANCH CIRCUIT	SAFETY DISCONNECT SWITCHES
RTU-1	3#6, 1#8G, 1"C	FACTORY PROVIDED
RTU-2	3#6, 1#8G, 1"C	FACTORY PROVIDED
RTU-3	3#6, 1#8G, 1"C	FACTORY PROVIDED

NOTES:

A. SAFETY DISCONNECT SWITCHES SHALL BE INSTALLED ON WITHIN 4-FEET OF

B. REFER TO PANELS FOR CIRCUIT DESIGNATIONS.

GENERAL NOTES:

A. REFER TO SHEET MEP-1.0 FOR GENERAL NOTES.

B. CONTRACTOR SHALL INCLUDE IN HIS BID TO OWNER MATERIAL AND LABOR REQUIRED TO SEAL ALL ROOF PENETRATIONS WHERE HVAC EQUIPMENT WILL BE COMPLETELY DEMOLISHED. SEAL WITH VAPOR BARRIER WEATHER TIGHT SEALANT.

C. REFER TO PANEL SCHEDULES FOR EQUIPMENT BRANCH CIRCUITS.

D. EXISTING ELECTRICAL PANELS TO REMAIN..

E. ELECTRICAL CONTRACTOR SHALL INCLUDE IN HIS BID TO OWNER MATERIAL AND LABOR REQUIRED TO DISCONNECT EXISTING EXISTING AIR HANDLING UNITS. REFER TO MECHANICAL CONNECTION SCHEDULE FOR REQUIREMENTS.

KEY NOTES: (#)

1. ELECTRICAL CONTRACTOR SHALL INCLUDE IN HIS BID TO OWNER MATERIAL AND LABOR REQUIRED TO CONNECT NEW ROOF TOP UNIT. FURNISH AND INSTALL NEW DUCT SMOKE DETECTORS & TEST SWITCHES; CONNECT SMOKE DETECTOR TO EXISTING FIRE ALARM. REFER TO MECHANICAL EQUIPMENT CONNECTION SCHEDULE FOR NEW FEEDER SIZE REQUIREMENTS.

2. FURNISH AND INSTALL POWER FOR MAINTENANCE PURPOSE HVAC PACKAGED ROOF MOUNTED GFCI. CONTRACTOR SHALL INCLUDE IN HIS BID MATERIAL AND LABOR REQUIRED TO CONNECT POWER CONSISTING OF (2#12, 1#12EGC, 1/2"C) BRANCH CIRCUIT FROM PANEL "TN". CONTRACTOR SHALL PROVIDE WARNING LABELS INDICATING THAT GFCI RECEPTACLE IS BEEN SERVED BY PANEL "TN". PROVIDE LABEL WITH CIRCUIT AND ELECTRICAL PANEL IDENTIFICATION AND LOCATION.

3. APPROXIMATE LOCATION OF EXISTING MAIN DISTRIBUTION PANEL "A". CONTRACTOR SHALL INCLUDE IN HIS BID TO OWNER MATERIAL AND LABOR REQUIRED TO REPLACE EXISTING 100AMP/3POLE SQUARE-D BRANCH BREAKER WITH NEW 200AMP/3 POLE FOR POWER TO NEW PANEL "TN". EXISTING 100 AMP BRANCH BREAKER AND FEEDERS CURRENTLY SERVING POWER TO PANEL "B" SHALL BE RETURNED TO OWNER OR DISCARDED AT THE OWNER'S REQUESTS. EXISTING MAIN DISTRIBUTION PANEL "A" IS A SQUARE D, TYPE ML 800AMP,208Y/120 VOLT, THREE PHASE, 4 WIRE CATALOG #10141.

4. APPROXIMATE LOCATION OF NEW PROPOSED PANEL "TN". CONTRACTOR SHALL INCLUDE IN HIS BID TO OWNER MATERIAL AND LABOR REQUIRED TO FURNISH AND INSTALL NEW FEEDERS AS FOLLOWS:
   A. QTY.(1) SET CONSISTING OF 3#3/0, 1#3/0-NEUTRAL, 1#6EGC, 2-1/2"EMT-CONDUIT. FROM NEW PANEL "TN" TO EXISTING MDP "A".
   B. QTY.(1) SET CONSISTING OF 3#3/0, 1#3/0-NEUTRAL, 1#6EGC, 2-1/2"EMT-CONDUIT FROM NEW PANEL "TN" TO EXISTING PANEL "B".

5. APPROXIMATE LOCATION OF EXISTING PANEL "B". RECONNECT POWER TO THIS ELECTRICAL PANEL USING NEW FEEDERS NOTED ON KEYNOTE#4, THIS SHEET.

6. EXISTING 250 AMP/3-POLE BRANCH BREAKER SERVING HVAC CHILLER TO BE TURNED TO THE OFF POSITION. ALL FEEDERS FROM PANEL "A" TO THE CHILLER SHALL BE REMOVED; CONDUIT TO REMAIN IN PLACE.

7. ELECTRICAL CONTRACTOR SHALL INCLUDE IN HIS BID TO OWNER MATERIAL AND LABOR REQUIRED TO FURNISH AND INSTALL NEW (2#12,1#12EGC, 1/2"C) BRANCH CIRCUIT FOR GPS, DUCT MOUNTED SENSORS.

BID PREPARATION

BASE BID:

BASE BID SHALL INCLUDE ALL BUILDING TRADES WORK ASSOCIATED WITH THE REPLACEMENT OF FAN COIL UNITS, FC-I, & FC-F WITH PACKAGED DX ROOFTOP UNITS, RTU-I, & RTU-F.

ALTERNATE #1:

ALTERNATE #1 SHALL INCLUDE ALL BUILDING TRADES WORK ASSOCIATED WITH THE REPLACEMENT OF FAN COIL UNIT, FC-G, WITH PACKAGED DX ROOFTOP UNIT, RTU-G.

LEGEND

——— NEW

- - - - - - - EXISTING TO REMAIN

SIGMAEN ENGINEERS, PLLC
TBPE Firm No. F-14767
701 S. 15th Street
McAllen, Texas 78501

CITY OF EDINBURG FIRE STATION HVAC IMPROVEMENTS

EDINBURG, TX

STATE OF TEXAS
JOSE ANTONIO NICANOR
108783
LICENSED
PROFESSIONAL ENGINEER

07-10-2019

PROJECT NO.: 19011
ISSUED: 04/17/2019
REVISIONS:

NO.	DATE	DESCRIPTION

DRAWN BY: KA
CHECKED BY: JAN
SHEET TITLE:
ELECTRICAL PLAN

E-1.0

1 ELECTRICAL PLAN & ELECTRICAL MECHANICAL CONNECTION SCHEDULE

SCALE: 1/8"=1'-0"

N

NEW PANELBOARD "TN"

VOLTAGE: 208Y/120 VOLT 3 PHASE 4 WIRE — LOCATION: ROOM

200 A MAIN BREAKER — MOUNTING: SURFACE, NEMA 1

BUSES: MAIN - 225 A; NEUTRAL -100%; EQUIPMENT GROUND — Isc = 10,000 A RMS SYM AVAILABLE

VA:L	VA:R	VA:O	LOAD	BKR	CKT	PH	CKT	BKR	LOAD	VA:L	VA:R	VA:O
0	0	4800	RTU-1	50/3	1	A	2	50/3	RTU-3	0	0	4680
0	0	4800	"	-	3	B	4	-	"	0	0	4680
0	0	4800	"	-	5	C	6	-	"	0	0	4680
0	0	4320	RTU-2	45/3	7	A	8	50/3	SPARE	0	0	
0	0	4320	"	-	9	B	10	-	"	0	0	
0	0	4320	"	-	11	C	12	-	"	0	0	
0	540		MAINTENANCE RTU'S RECEPT.	20/1	13	A	14	20/1	GPS SENSOR	0	180	
0	0		SPACE	20/1	15	B	16	20/1	SPACE	0	0	
0	0		SPACE	20/1	17	C	18	20/1	SPACE	0	0	
0	0		SPACE	20/1	19	A	20	20/1	SPACE	0	0	
0	0		SPACE	20/1	21	B	22	20/1	SPACE	0	0	
0	0		SPACE	20/1	23	C	24	20/1	SPACE	0	0	

VA:L (LIGHTING)	0	CONNECTED	0	DEMAND
VA:R (RECEPTACLES)	720	CONNECTED	720	DEMAND
VA:O (OTHER)	41400	CONNECTED	41400	DEMAND
VA: TOTAL	42120	CONNECTED	42120	DEMAND
AMPS: TOTAL	117	CONNECTED	117	DEMAND

L	R	O		TOTAL			
0	720	13800	VA CONNECTED TO A PHASE	14520	VA =	121	AMPS CONNECTED TO A PHASE @ 120 VOLTS
0	0	13800	VA CONNECTED TO B PHASE	13800	VA =	115	AMPS CONNECTED TO B PHASE @ 120 VOLTS
0	0	13800	VA CONNECTED TO C PHASE	13800	VA =	115	AMPS CONNECTED TO C PHASE @ 120 VOLTS
0	720	41400	**TOTAL**	42120	VA		

ELECTRICAL GENERAL LEGEND

ALL SYMBOLS SHOWN MAY NOT APPEAR IN ALL DRAWINGS.
SYMBOLS ARE SHOWN SCHEMATIC AND MAY NOT BE TO SCALE.

SYMBOL	DESCRIPTION	MNTG. HT. UNO (SEE NOTE 1)
	DUPLEX RECEPTACLE, 20A, GROUND FAULT INTERCEPTOR; C = CEILING MOUNTED.	15" AFF
J	JUNCTION BOX - SIZE & MOUNTING AS REQUIRED	-
	PANELBOARD	-
D	DUCT SMOKE DETECTOR	AS REQD.

GENERAL ABBREVIATIONS

ABS	ABOVE BACK SPLASH	NC (N.C.)	NORMALLY CLOSED
AFF	ABOVE FINISHED FLOOR	NF	NONFUSED
BFC	BELOW FINISHED CEILING	NIC	NOT IN CONTRACT
C	CONDUIT	NL	NIGHT LIGHT
CB	CIRCUIT BREAKER	NO (N.O.)	NORMALLY OPEN
CLG	CEILING	PNL	PANEL
EC	EMPTY CONDUIT	RCPT(S)	RECEPTACLE(S)
EP	ELECTRICAL PRIMARY	SO (S.O.)	SPACE ONLY
EX	EXISTING	SP	SPARE
F	FUSE	SPD	SURGE PROTECTION DEVICE
G	GROUND (EQUIPMENT)	ST (S.T.)	SHUNT TRIP
GFI	GROUND FAULT INTERRUPTER	SW	SWITCH
HCC	HORIZONTAL CROSS CONNECT	TYP	TYPICAL
IC	INTERRUPTING CAPACITY	UF	UNDERFLOOR
ICC	INTERMEDIATE CROSS CONNECT	UG	UNDERGROUND
IG	ISOLATED GROUND	UNO	UNLESS NOTED OTHERWISE
MTD	MOUNT OR MOUNTED	WG	WIRE GUARD
		WP	WEATHERPROOF
		XFMR	TRANSFORMER

1 ELECTRICAL PANEL SCHEDULE AND ELECTRICAL GENERAL LEGEND

SCALE: N.T.S.

SIGMA ENGINEERS, PLLC
TBPE Firm No. F-14767
701 S. 15th Street
McAllen, Texas 78501

CITY OF EDINBURG FIRE STATION
HVAC IMPROVEMENTS
EDINBURG, TX

STATE OF TEXAS
JOSE ANTONIO NICANOR
108783
LICENSED
PROFESSIONAL ENGINEER
04-17-2019

PROJECT NO.: 19011
ISSUED: 04/17/2019
REVISIONS:

NO.	DATE	DESCRIPTION

DRAWN BY: KA
CHECKED BY: JAN
SHEET TITLE:
ELECTRICAL SCHED. & GEN. LEGEND

E-2.0

CITY OF EDINBURG
FIRE STATION HVAC IMPROVEMENTS

OWNER: CITY OF EDINBURG
415 W. University Drive
Edinburg, Texas 78539

CONSULTANTS: SIGMA HN ENGINEERS, PLLC
701 S. 15th St.
McAllen, Texas 78501

CLH ENGINEERING, INC.
701 S. 15th St.
McAllen, Texas 78501

SITE LOCATION MAP

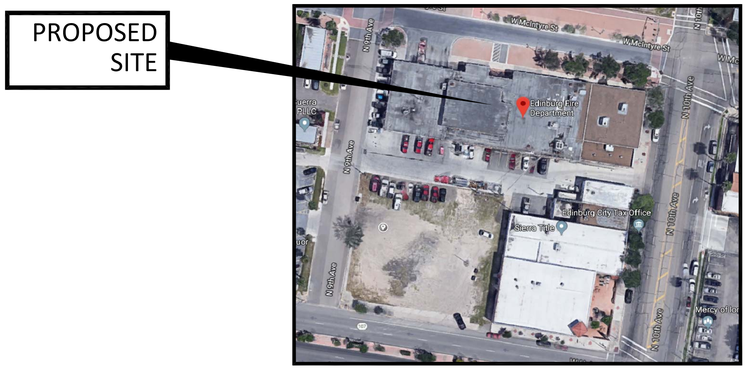

SIGMA HN ENGINEERS, PLLC
TBPE Firm No. F-14767
701 S. 15th Street
McAllen, Texas 78501

CITY OF EDINBURG FIRE STATION HVAC IMPROVEMENTS
EDINBURG, TX

PROJECT NO.: 19011
ISSUED: 04/17/2019
REVISIONS:

NO.	DATE	DESCRIPTION

STATE OF TEXAS — J. GABRIEL HINOJOSA — 96585 — LICENSED PROFESSIONAL ENGINEER — 07-10-2019

STATE OF TEXAS — JOSE ANTONIO NICANOR — 108783 — LICENSED PROFESSIONAL ENGINEER — 07-10-2019

DRAWN BY:
CHECKED BY:
SHEET TITLE:
MEP COVER PAGE

MEP-0.0

GENERAL NOTES

MECHANICAL

GENERAL MECHANICAL NOTES:

A. THESE DRAWINGS ARE DIAGRAMMATIC ONLY AND SHALL NOT BE SCALED. THE GENERAL CONTRACTOR IS RESPONSIBLE FOR COORDINATING ALL CONSTRUCTION EFFORTS. PROVIDE ALL NECESSARY OFFSETS AND FITTINGS AS REQUIRED BY FIELD CONDITIONS.

B. CONTRACTOR SHALL FIELD VERIFY EXISTING CONDITIONS PRIOR TO COMMENCING WORK. ANY DISCREPANCIES BETWEEN EXISTING CONDITIONS AND CONSTRUCTION DOCUMENTS SHALL BE REPORTED IMMEDIATELY TO THE ENGINEER AND/OR OWNER.

C. THE CONTRACTOR IS FULLY RESPONSIBLE FOR PERFORMING THE WORK IN FULL COMPLIANCE WITH ALL APPLICABLE LOCAL, STATE, AND FEDERAL CODES UNDER THIS SECTION OF THE CONTRACT. IF THE CONTRACTOR DETERMINES THAT THE CONTRACT DOCUMENTS AND PLANS ARE NOT IN COMPLIANCE WITH THE APPLICABLE LOCAL CODES, HE SHALL INFORM THE OWNER PRIOR TO CONSTRUCTION START FOR DIRECTION. FAILURE TO DO SO SHALL NOT RELIEVE THE CONTRACTOR OF HIS RESPONSIBILITY TO MEET APPLICABLE LOCAL CODES, AND REWORK SHALL BE AT CONTRACTOR'S EXPENSE.

D. CONTRACTOR SHALL HANG AND INSTALL ALL DUCTWORK TIGHT WITH THE BUILDING STRUCTURE TO ACCOMMODATE NEW CEILINGS. CONTRACTOR SHALL COORDINATE ALL INSTALLATION WORK WITH ARCHITECTURAL AND ELECTRICAL DESIGN. ALL DUCTWORK SHALL BE MODIFIED AS NECESSARY AND REQUIRED TO FIT AROUND BUILDING STRUCTURES, ARCHITECTURAL BUILD-OUT. MECHANICAL CONTRACTOR SHALL FAMILIARIZE HIMSELF WITH THE WORK SCOPE OF OTHER TRADES AND PARTICIPATE IN COORDINATING ALL CONSTRUCTION EFFORTS.

E. CONTRACTOR SHALL INSTALL ALL EXHAUST SYSTEMS, INCLUDING FANS AND EXHAUST DUCTS. PROVIDE COMPLETE NEW SYSTEMS AS INDICATED.

F. CONTRACTOR SHALL PROVIDE ALL CEILING DIFFUSERS AS SHOWN. CONNECT EACH DIFFUSER TO THE MAIN DISTRIBUTION DUCT WITH A FLEX-DUCT SECTION; CONNECTIONS SHALL BE COMPLETED IN ACCORDANCE WITH THE DETAIL SHOWN IN THESE PLANS. EACH FLEX-DUCT CONNECTION SHALL INCLUDE A BUTTERFLY DAMPER TO BE INSTALLED AT THE TRUNK DUCT.

G. CONTRACTOR SHALL PROVIDE ALL DUCTWORK REQUIRED TO COMPLETE THE HVAC SYSTEM. TIE IN BRANCH DUCTS TO MAIN DUCTS WITH SHEET METAL FLANGES. FLANGE CONNECTION SHALL BE FASTENED WITH CRIMPED SHEET METAL STRIPS AND SEALED WITH SILICONE CAULK.

H. ALL OPENINGS CUT IN MASONRY AND PLASTER WALLS OR CONCRETE FLOORS SHALL BE CORE DRILLED OR SAWED WHEN POSSIBLE. CONTRACTOR SHALL CHECK BUILDING CONSTRUCTION BEFORE MAKING PENETRATIONS TO AVOID CUTTING THROUGH STRUCTURAL BEAMS AND REINFORCING. CONTRACTOR SHALL INFORM THE ENGINEER IF REINFORCING IS CUT OR DAMAGED WHILE MAKING OPENINGS. CONTRACTOR SHALL REINFORCE ALL OPENINGS AS REQUIRED BY DRAWINGS AND SPECIFICATIONS. PATCH AND SEAL OPENINGS WITH 6000 PSI CEMENT GROUT. INSTALL DECORATIVE TRIM (EQUIPMENT FLANGES, FRAMING OR ESCUTCHEONS) AROUND OPENINGS IN FINISHED AREAS. COORDINATE ALL CUTTING AND PATCHING WITH THE OTHER TRADES.

I. ON ANY WORK SHOWN ON MECHANICAL DRAWINGS REQUIRING DEMOLITION OF EXISTING OR NEW BUILDING STRUCTURES AND FINISHES, IT SHALL BE THE RESPONSIBILITY OF THE CONTRACTOR TO COMPLETE THE NECESSARY DEMOLITION. CONTRACTOR SHALL PATCH AND REPAIR ALL DEMOLITION WORK. PATCHING SHALL BE COMPLETED WITH THE SAME MATERIALS AS THE SURROUNDING AREAS, OR WITH OWNER-APPROVED PATCHING MATERIALS. ALL REFINISHING SHALL BE APPROVED BY THE OWNER.

J. CONTRACTOR SHALL BE RESPONSIBLE FOR COMPLETING THE INSTALLATION OF THE AIR DISTRIBUTION SYSTEM SHOWN. DUCTWORK, DUCT ACCESSORIES AND CONTROLS SHOWN AND REQUIRED SHALL BE SUPPLIED AND INSTALLED. ALL INSTALLATION WORK SHALL BE DONE IN ACCORDANCE WITH APPLICABLE CODES, INCLUDING NFPA 90A AND 90B.

K. CONTRACTOR SHALL BALANCE ALL AIR DISTRIBUTION SYSTEMS TO ACHIEVE THE AIR VOLUME REQUIREMENTS INDICATED. BALANCING SHALL INCLUDE ADJUSTMENT OF ALL MANUAL VOLUME DAMPERS, SPLITTER DAMPERS, ZONE DAMPERS (IF REQUIRED), BUTTERFLY DAMPERS AND INDIVIDUAL DIFFUSER VOLUME DAMPERS (FINAL BALANCING ONLY). CONTRACTOR SHALL SUPPLY THE ENGINEER WITH A COMPLETE BALANCING REPORT WHICH INCLUDES VOLUME, ROOM REFERENCE AND ZONE VOLUME TOTALS.

L. MOUNT ALL THERMOSTATS (SENSORS) 48" ABOVE THE FINISHED FLOOR LEVEL UNLESS NOTED OTHERWISE THERMOSTATS SHOWN SHALL BE IN CONTROL OF THE ZONE SYSTEM WHICH IS SUPPLYING AIR TO THE AREA WHERE THE THERMOSTAT IS LOCATED. CONTRACTOR SHALL COORDINATE THE FINAL LOCATION OF EACH THERMOSTAT WITH THE ROOM FINISHES AND USES. CONTRACTOR SHALL SUPPLY AND INSTALL ALL CONTROL VOLTAGE WIRING AND CONDUIT FOR THERMOSTAT INSTALLATION.

M. CONTRACTOR SHALL COORDINATE THE FINAL LOCATIONS OF ALL CEILING DIFFUSERS WITH LIGHTING INSTALLATIONS AND ARCHITECTURAL REFLECTED CEILING PLANS. MOVE THE DIFFUSER LOCATIONS IF REQUIRED TO AVOID OBSTRUCTIONS FROM DUCTWORK AND LIGHT FIXTURES. COORDINATE RELOCATION WITH ENGINEER.

N. VERIFY THE LOCATION OF ALL WALLS, PARTITIONS, DOORS, CABINETS, AND CEILINGS FROM ACTUAL FIELD MEASUREMENTS.

O. PROVIDE SMOKE DETECTOR AND SHUTDOWN CONTROLS ON AIR HANDLERS AND SUPPLY FANS. SMOKE DETECTORS SHALL BE PROVIDED, INSTALLED AND WIRED FOR SHUT DOWN BY DIVISION 16. PROVIDE BOTH SUPPLY AND RETURN SIDE DEVICES.

MECHANICAL GENERAL DEMOLITION NOTES:

A. INFORMATION ON THE PLAN HAS BEEN OBTAINED FROM EXISTING DRAWINGS AND SITE SURVEY. CONTRACTOR SHALL VERIFY EXISTING CONDITIONS PRIOR TO COMMENCING WORK. ANY DISCREPANCIES BETWEEN EXISTING CONDITIONS AND CONSTRUCTION DOCUMENTS SHALL BE REPORTED IMMEDIATELY TO THE ENGINEER AND/OR ARCHITECT.

B. THE CONTRACTOR IS FULLY RESPONSIBLE FOR PERFORMING THE DEMOLITION WORK UNDER THIS SECTION OF THE PROJECT IN FULL COMPLIANCE WITH ALL APPLICABLE LOCAL, STATE, AND FEDERAL CODES. IF THE CONTRACTOR DETERMINES THAT THE CONTRACT DOCUMENTS AND PLANS ARE NOT IN COMPLIANCE WITH THE APPLICABLE CODES, HE SHALL INFORM THE ARCHITECT PRIOR TO CONSTRUCTION START FOR DIRECTION. FAILURE TO DO SO SHALL NOT RELIEVE THE CONTRACTOR OF HIS RESPONSIBILITY TO MEET CODE REQUIREMENTS AND REWORK SHALL BE AT CONTRACTOR'S EXPENSE. APPLICABLE CODES AND STANDARDS ON DEMOLITION WORK SHALL INCLUDE THOSE PUBLISHED BY OSHA AND EPA. AN ASBESTOS SURVEY SHALL BE KEPT ON SITE AT ALL TIMES PER TEXAS DEPARTMENT OF HEALTH REQUIREMENTS.

C. ALL DUST PRODUCTION, SMOKE PRODUCTION AND NOISE SHALL BE SUBJECT TO REAL TIME REVIEW BY THE ARCHITECT. WORK SHALL BE SHUT DOWN DURING CRITICAL ACTIVITIES BY FORMAL REQUEST FROM THE DESIGNATED AUTHORITY OR CONTRACTING ARCHITECT. WORK IN DUSTY AREAS SHALL BE CONTROLLED WITH TEMPORARY PARTIONS. FLAME CUTTING SHALL BE MINIMIZED TO ELIMINATE SMOKE PRODUCTION. PROVIDE FIRE EXTINGUISHERS IN THE IMMEDIATE AREA.

D. GENERAL CONTRACTOR SHALL BE ADVISED OF ALL NEW PROPOSED ROOF OPENINGS BY ANY SUB-CONTRACTOR.

E. ON ANY WORK SHOWN ON MECHANICAL DRAWINGS WHICH REQUIRES DEMOLITION OF BUILDING STRUCTURES AND FINISHES, IT SHALL BE THE RESPONSIBILITY OF THE CONTRACTOR TO COMPLETE THE NECESSARY DEMOLITION. CONTRACTOR SHALL PATCH AND REPAIR ALL BUILDING DAMAGE CREATED BY DEMOLITION WORK. PATCHING SHALL BE COMPLETED WITH THE SAME MATERIALS AS THE SURROUNDING AREAS, OR WITH ARCHITECT APPROVED PATCHING MATERIALS.

F. ALL OPENINGS CUT IN MASONRY AND PLASTER WALLS OR CONCRETE FLOORS SHALL BE CORE-DRILLED OR SAWED WHEN POSSIBLE. CONTRACTOR SHALL CHECK BUILDING CONSTRUCTION WITH STRUCTURAL ENGINEER BEFORE MAKING PENETRATIONS TO AVOID CUTTING THROUGH STRUCTURAL BEAMS AND REINFORCING. CONTRACTOR SHALL INFORM THE ENGINEER IF REINFORCING IS CUT OR DAMAGED WHILE MAKING OPENINGS AS REQUIRED BY DRAWINGS AND SPECIFICATIONS. PATCH AND SEAL OPENINGS WITH 8000 PSI CEMENT GROUT. INSTALL DECORATIVE TRIM (EQUIPMENT FLANGES, FRAMING, OR ESCUTCHEONS) AROUND OPENINGS IN FINISHED AREAS. COORDINATE ALL CUTTING AND PATCHING WITH THE OTHER TRADES.

G. ALL SURFACES COVERED BY "SPRAY POLY" AND PROTECTED BY TEMPORARY PARTITIONS SHALL REMAIN PROTECTED THROUGHOUT THE PROJECT. REMOVE THE PROTECTIVE BARRIERS ONLY AFTER THE NEW EQUIPMENT PIPING AND DUCTWORK IS INSTALLED. PATCH AND MAINTAIN THE PROTECTIVE BARRIERS DURING CONSTRUCTION. COVER ALL EQUIPMENT OPENINGS WITH 4 MIL. POLY AND DUCT TAPE IN PLACE.

H. ALL NEW ROOF PENETRATIONS SHALL BE ROUTED THRU ANY EXISTING OPENING WHEREVER POSSIBLE. LARGER AND NEW OPENINGS SHALL BE KEPT TO A MINIMUM.

I. CONTRACTOR SHALL BE FULLY RESPONSIBLE FOR ALL UNDERGROUND UTILITIES IN AREAS OF EXCAVATION WORK.

J. CONTRACTOR SHALL REMOVE AND RETURN ANY AND ALL EXISTING EQUIPMENT/MATERIALS TO OWNER. OWNER SHALL HAVE FULL RIGHT OF OWNERSHIP UNLESS SPECIFIED OTHERWISE. IF THE OWNER WAIVES THIS OPTION, ANY EQUIPMENT, MATERIAL, ETC SHALL BECOME THE PROPERTY OF THE CONTRACTOR.

K. CONTRACTOR SHALL KEEP THE ENTIRE MEP DEMOLITION SITE CLEAN AT ALL TIMES.

L. CONTRACTOR AND OWNER SHALL BE FULLY RESPONSIBLE TO IDENTIFY ANY AND ALL ASBESTOS PRESENT IN THE BUILDING PRIOR TO DEMOLITION AS REQUIRED BY LAW.

M. COORDINATION AMONG OTHER CONSTRUCTION DISCIPLINES PRIOR TO DEMOLITION IS MANDATORY.

N. CONTRACTOR SHALL IDENTIFY ALL WATER CONNECTION LINES, NATURAL GAS LINES AND SANITARY SEWER LINES PRIOR TO COMMENCING DEMOLITION WORK.

ELECTRICAL

GENERAL POWER NOTES:

A. ELECTRICAL CONTRACTOR SHALL INSTALL ALL UNDERGROUND CONDUIT, CONDUCTORS AND CABLES AS SPECIFIED. REFER TO SPECIFICATION SECTIONS FOR REQUIREMENTS.

TABLE OF CONTENTS

MEP-0.0	-	COVER SHEET
MEP-1.0	-	GENERAL NOTES
MD-1.0	-	MECHANICAL DEMOLITION PLAN
M-1.0	-	MECHANICAL PLAN
M-1.1	-	MECHANICAL ROOF PLAN
M-2.0	-	MECHANICAL DETAILS
M-3.0	-	MECHANICAL SCHEDULES
ED-1.0	-	ELECTRICAL DEMOLITION PLAN
E-1.0	-	ELECTRICAL PLAN AND ELECTRICAL MECH. CONNECTION SCHEDULE
E-2.0	-	ELECTRICAL PANEL SCHEDULE AND ELECTRICAL GENERAL LEGEND
S-1.0	-	GENERAL NOTES
S-2.0	-	REINFORCING PLAN
SD-1.0	-	STRUCTURAL DETAILS

BID PREPARATION

BASE BID:

BASE BID SHALL INCLUDE ALL BUILDING TRADES WORK ASSOCIATED WITH THE REPLACEMENT OF FAN COIL UNITS, FC-I, & FC-F WITH PACKAGED DX ROOFTOP UNITS, RTU-I, & RTU-F.

ALTERNATE #1:

ALTERNATE #1 SHALL INCLUDE ALL BUILDING TRADES WORK ASSOCIATED WITH THE REPLACEMENT OF FAN COIL UNIT, FC-G, WITH PACKAGED DX ROOFTOP UNIT, RTU-G.

STATE OF TEXAS
J. GABRIEL HINOJOSA
96585
LICENSED
PROFESSIONAL ENGINEER
07-10-2019

STATE OF TEXAS
JOSE ANTONIO NICANOR
108783
LICENSED
PROFESSIONAL ENGINEER
07-10-2019

SIGMA ENGINEERS, PLLC
TBPE Firm No. F-14767
701 S. 15th Street
McAllen, Texas 78501

CITY OF EDINBURG FIRE STATION
HVAC IMPROVEMENTS
EDINBURG, TX

PROJECT NO.: 19011
ISSUED: 04/17/2019
REVISIONS:

NO.	DATE	DESCRIPTION

DRAWN BY:
CHECKED BY:
SHEET TITLE:
MEP
COVER PAGE

MEP-1.0

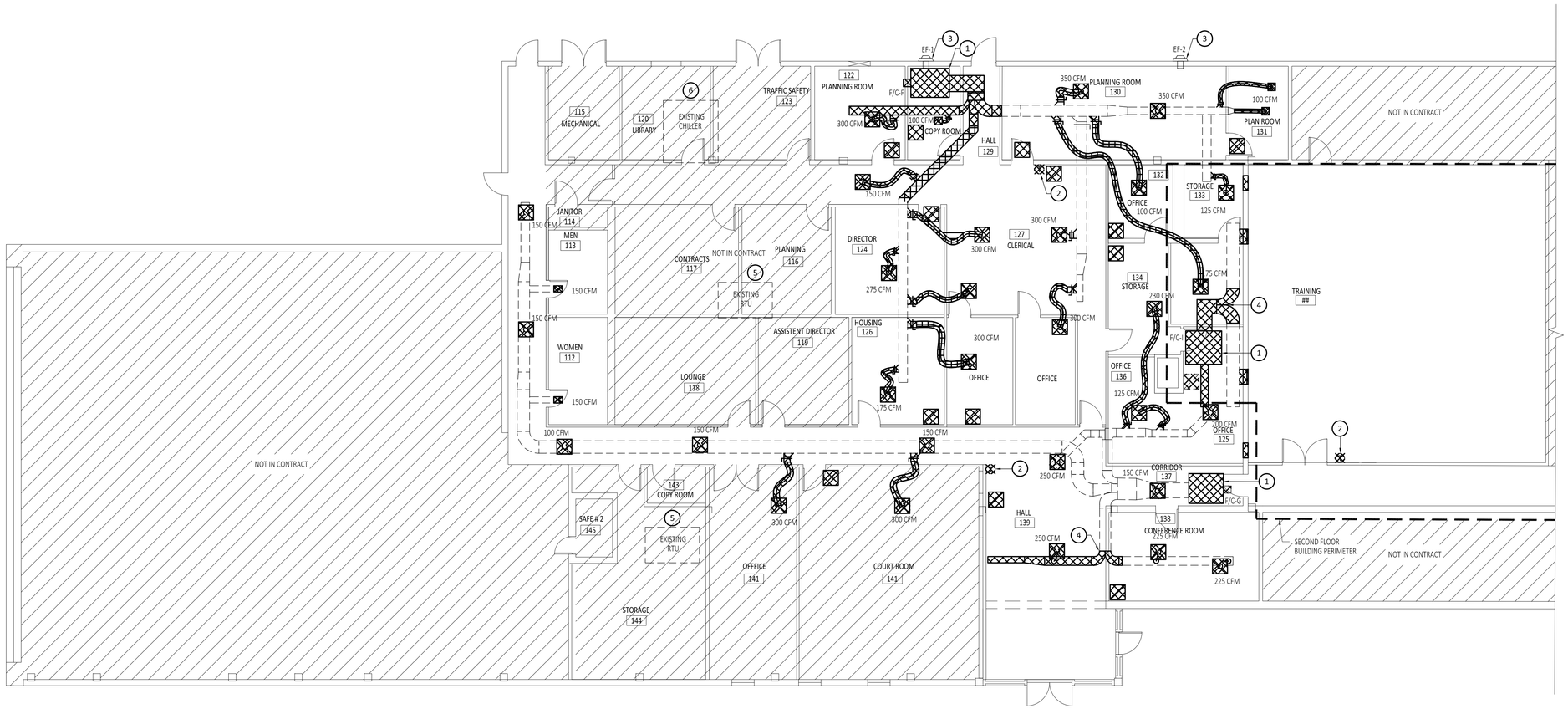

1 MECHANICAL DEMO PLAN

SCALE: 1/8"=1'-0"

N

GENERAL NOTES:

1. REFER TO SHEET MEP-1.0 FOR GENERAL NOTES.
2. WHERE EXISTING BRANCH DUCT IS REMOVED, REMAINING TRUNK DUCT SHALL BE PATCHED, SEALED, AND RE-INSULATED WITH NEW VAPOR BARRIER EQUAL TO CHILDERS CP-38. THE EXISTING INSULATION SHALL BE STRIPPED A MINIMUM OF 6" ON BOTH SIDES OF DUCT OPENING TO ALLOW FOR PATCH/REPAIR OF TRUNK DUCT. TYPICAL OF ALL SUCH LOCATIONS.
3. CONTRACTOR AND OWNER SHALL BE FULLY RESPONSIBLE TO IDENTIFY ANY AND ALL ASBESTOS PRESENT IN THE BUILDING PRIOR TO DEMOLITION AS REQUIRED BY LAW. OWNER HAS REPORTED ASBESTOS IN THE CHILLED WATER PIPING INSULATION AND ON THE FLOORING. CONTRACTOR SHALL USE APPROPRIATE PRECAUTIONS AS REQUIRED BY LAW. CONTRACTOR SHALL CUT EXISTING CHILLED WATER PIPING AT FAN COIL UNIT WHERE THERE IS NO ASBESTOS CONTAINING INSULATION. CHILLED WATER PIPING SHALL BE DRAINED AND ABANDONED IN PLACE.

KEY NOTES: (#)

1. REMOVE CHILLED WATER FAN COIL UNIT WHICH IS SUSPENDED ABOVE CEILING. DISCONNECT ASSOCIATED ELECTRICAL POWER, CHILLED WATER PIPING, CONTROLS, AND DUCT. PREPARE EXISTING DUCT FOR CONNECTION TO NEW PACKAGE DX ROOFTOP UNIT. FIELD VERIFY EXISTING CONDITIONS.
2. DEMOLISH EXISTING TEMPERATURE SENSOR. FIELD VERIFY EXISTING LOCATION OF SENSOR. PREPARE J-BOX FOR INSTALLATION OF NEW THERMOSTAT.
3. EXISTING EXHAUST FAN SHALL REMAIN AND BE DE-ENERGIZED. SEAL WITH COUNTER-BALANCED BACK DRAFT DAMPER EQUAL TO RUSKIN MODEL CBD6.
4. DEMOLISH EXISTING DUCT AND PREPARE FOR INSTALLATION OF NEW TEE-FITTING. FIELD VERIFY EXISTING DUCT DIMENSIONS PRIOR TO FABRICATION.
5. EXISTING PACKAGE DX ROOFTOP UNIT TO REMAIN.
6. EXISTING AIR COOLED CHILLER MOUNTED ON ROOF. DISCONNECT POWER AND CONTROLS FOR EXISTING CHILLER AND ABANDON IN PLACE.

BID PREPARATION

BASE BID:

BASE BID SHALL INCLUDE ALL BUILDING TRADES WORK ASSOCIATED WITH THE REPLACEMENT OF FAN COIL UNITS, FC-I, & FC-F WITH PACKAGED DX ROOFTOP UNITS, RTU-I, & RTU-F.

ALTERNATE #1:

ALTERNATE #1 SHALL INCLUDE ALL BUILDING TRADES WORK ASSOCIATED WITH THE REPLACEMENT OF FAN COIL UNIT, FC-G, WITH PACKAGED DX ROOFTOP UNIT, RTU-G.

DEMOLITION LEGEND

▨	EXISTING DUCT & EQUIPMENT TO BE DEMOLISH
- - - -	EXISTING DUCT & EQUIPMENT TO REMAIN

SIGMA ENGINEERS, PLLC
TBPE Firm No. F-14767
701 S. 15th Street
McAllen, Texas 78501

CITY OF EDINBURG FIRE STATION HVAC IMPROVEMENTS

EDINBURG, TX

STATE OF TEXAS
J. GABRIEL HINOJOSA
96585
LICENSED PROFESSIONAL ENGINEER
07-10-2019

PROJECT NO.:	19011
ISSUED:	04/17/2019
REVISIONS:	

NO.	DATE	DESCRIPTION

DRAWN BY:	CC
CHECKED BY:	GH
SHEET TITLE:	MECANICAL DEMO PLAN

MD-1.0

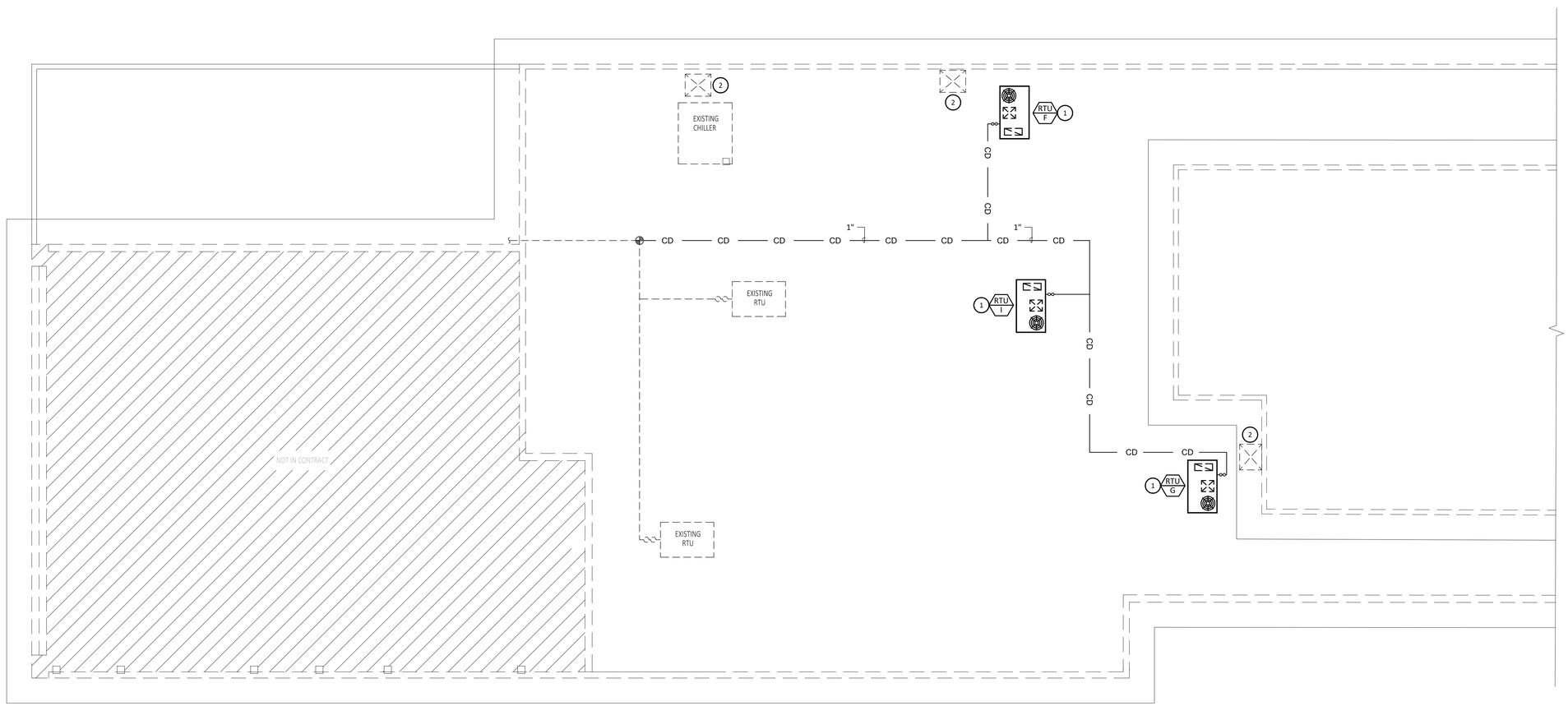

1 MECHANICAL PLAN

SCALE:1/8"=1'-0"

N

GENERAL NOTES:

1. REFER TO SHEET MEP-1.0 FOR GENERAL NOTES.
2. PROVIDE FLEXIBLE DUCT CONNECTIONS AT ALL RTU SUPPLY AND RETURN DUCT CONNECTIONS.
3. CONTRACTOR SHALL MAKE ALL ROOF REPAIRS ASSOCIATED WITH THIS PROJECT WITH MATERIALS TO MATCH EXISTING. CONTRACTOR SHALL COORDINATE WITH THE OWNER AND WORK WITH THE ROOFING MANUFACTURER HOLDING THE BOND AND/OR WARRANTY ON THE EXISTING ROOF. ANY MODIFICATIONS OR ALTERATIONS MADE TO THE ROOF WILL NEED TO BE COMPLETED BY ROOFING MANUFACTURER HOLDING THE BOND AND/OR WARRANTY.
4. CONTRACTOR SHALL REMOVE INTERIOR ACOUSTICAL CEILING GRID AND TILE AS NECESSARY TO MAKE REVISIONS, CONNECTIONS, AND MODIFICATIONS TO DUCTWORK. UPON COMPLETION, CONTRACTOR SHALL REINSTALL ACOUSTICAL CEILING GRID AND TILE TO ORIGINAL CONDITION. DAMAGED CEILING TILES SHALL BE REPLACED. FIELD VERIFY EXISTING CONDITIONS.
5. DELEGATED DESIGN: PROVIDE DELEGATED DESIGN SUBMITTAL FOR ALL MATERIAL AND EQUIPMENT ATTACHMENTS ON THE ROOF WHERE NECESSITATED BY WINDSTORM REQUIREMENTS, INCLUDING RTU TO CURB AND CURB TO EXISTING STRUCTURE. INCLUDE COMPREHENSIVE ENGINEERING ANALYSIS BY A QUALIFIED PROFESSIONAL ENGINEER USING PERFORMANCE REQUIREMENTS AND DESIGN CRITERIA INDICATED BELOW:
   - BUILDING CLASSIFICATION: GROUP B
   - RISK CATEGORY: IV.
   - EXPOSURE CATEGORY: B.
   - ULTIMATE DESIGN WIND SPEED, 3 SEC GUST: 140 MPH.

KEY NOTES: (#)

1. FULL SIZE COPPER CONDENSATE DRAIN LINE. INSULATE LINE ABOVE ROOF DECK WITH 1" FLEXIBLE ELASTOMERIC INSULATION. SLOPE PIPING 1/8" PER FOOT. PROVIDE PIPE HANGER SUPPORTS MAXIMUM 5'-0" O.C. SPACING. CONTRACTOR SHALL CONNECT FULL SIZE CONDENSATE PIPE TO EXISTING DRAIN. FIELD VERIFY EXISTING CONDITIONS.
2. EXISTING OUTSIDE AIR INTAKE HOOD TO REMAIN. CONTRACTOR SHALL SEAL DUCT/OPENING AIR TIGHT.

BID PREPARATION

BASE BID:

BASE BID SHALL INCLUDE ALL BUILDING TRADES WORK ASSOCIATED WITH THE REPLACEMENT OF FAN COIL UNITS, FC-I, & FC-F WITH PACKAGED DX ROOFTOP UNITS, RTU-I, & RTU-F.

ALTERNATE #1:

ALTERNATE #1 SHALL INCLUDE ALL BUILDING TRADES WORK ASSOCIATED WITH THE REPLACEMENT OF FAN COIL UNIT, FC-G, WITH PACKAGED DX ROOFTOP UNIT, RTU-G.

LEGEND

- NEW EQUIPMENT
- NEW DUCT
- EXISTING TO REMAIN

SIGMAEN ENGINEERS, PLLC
TBPE Firm No. F-14767
701 S. 15th Street
McAllen, Texas 78501

CITY OF EDINBURG FIRE STATION HVAC IMPROVEMENTS

EDINBURG, TX

STATE OF TEXAS
J. GABRIEL HINOJOSA
96585
LICENSED PROFESSIONAL ENGINEER
07-10-2019

PROJECT NO.: 19011
ISSUED: 04/17/2019
REVISIONS:

NO.	DATE	DESCRIPTION

DRAWN BY: CC
CHECKED BY: GH
SHEET TITLE:
MECANICAL ROOF PLAN

M-1.0

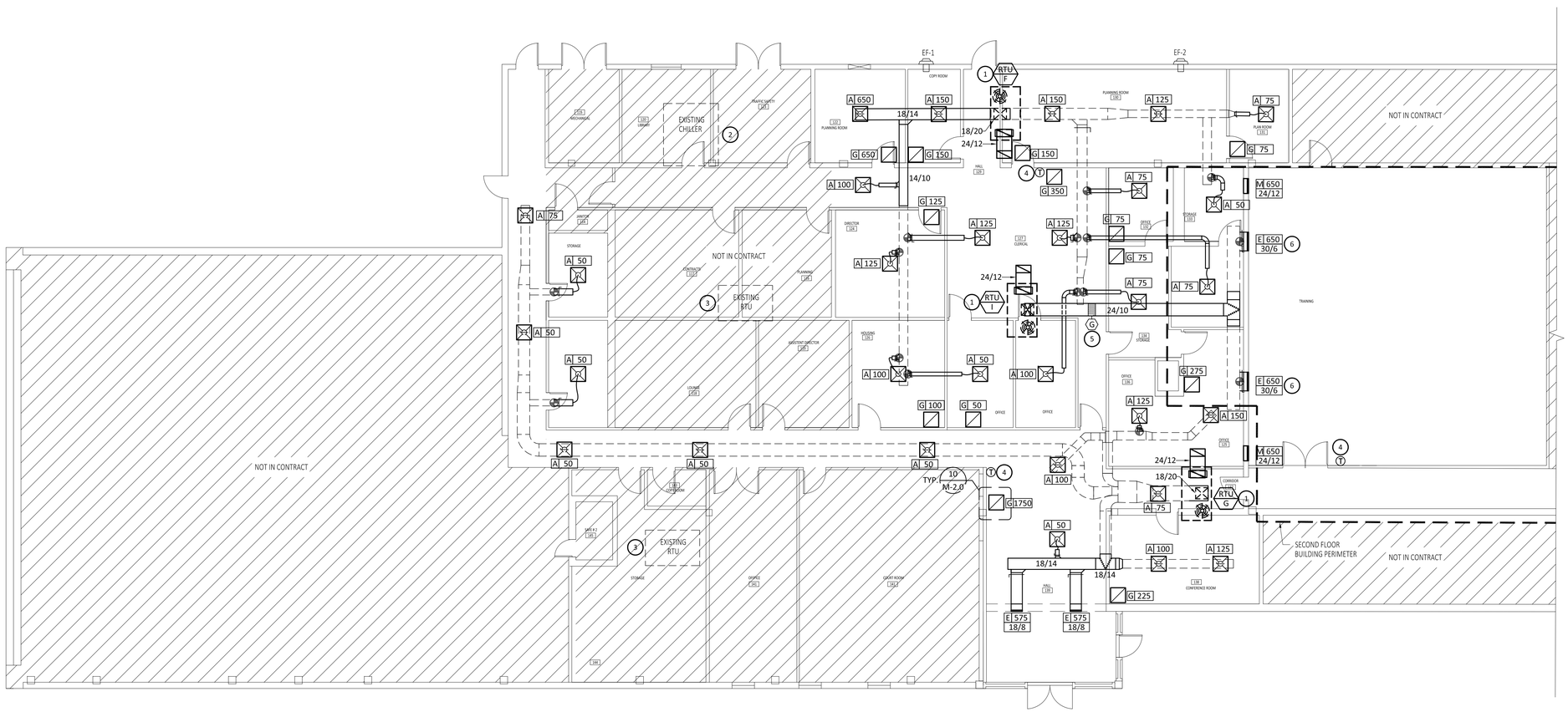

1 MECHANICAL PLAN

SCALE: 1/8"=1'-0"

GENERAL NOTES:

1. REFER TO SHEET MEP-1.0 FOR GENERAL NOTES.
2. PROVIDE FLEXIBLE DUCT CONNECTIONS AT ALL RTU SUPPLY AND RETURN DUCT CONNECTIONS.
3. CONTRACTOR SHALL MAKE ALL ROOF REPAIRS ASSOCIATED WITH THIS PROJECT WITH MATERIALS TO MATCH EXISTING. CONTRACTOR SHALL COORDINATE WITH THE OWNER AND WORK WITH THE ROOFING MANUFACTURER HOLDING THE BOND AND/OR WARRANTY ON THE EXISTING ROOF. ANY MODIFICATIONS OR ALTERATIONS MADE TO THE ROOF WILL NEED TO BE COMPLETED BY ROOFING MANUFACTURER HOLDING THE BOND AND/OR WARRANTY.
4. CONTRACTOR SHALL REMOVE INTERIOR ACOUSTICAL CEILING GRID AND TILE AS NECESSARY TO MAKE REVISIONS, CONNECTIONS, AND MODIFICATIONS TO DUCTWORK. UPON COMPLETION, CONTRACTOR SHALL REINSTALL ACOUSTICAL CEILING GRID AND TILE TO ORIGINAL CONDITION. DAMAGED CEILING TILES SHALL BE REPLACED. FIELD VERIFY EXISTING CONDITIONS.
5. COORDINATE FINAL PLACEMENT OF PACKAGED DX ROOFTOP UNITS WITH EXISTING ROOF CONCRETE BEAMS.
6. DELEGATED DESIGN: PROVIDE DELEGATED DESIGN SUBMITTAL FOR ALL MATERIAL AND EQUIPMENT ATTACHMENTS ON THE ROOF WHERE NECESSITATED BY WINDSTORM REQUIREMENTS, INCLUDING RTU TO CURB AND CURB TO EXISTING STRUCTURE. INCLUDE COMPREHENSIVE ENGINEERING ANALYSIS BY A QUALIFIED PROFESSIONAL ENGINEER USING PERFORMANCE REQUIREMENTS AND DESIGN CRITERIA INDICATED BELOW:
   - BUILDING CLASSIFICATION: GROUP B
   - RISK CATEGORY: IV.
   - EXPOSURE CATEGORY: B.
   - ULTIMATE DESIGN WIND SPEED, 3 SEC GUST: 140 MPH.

KEY NOTES: (#)

1. INSTALL NEW PACKAGED DX ROOFTOP UNIT. COORDINATE WITH ROOFING CONTRACTOR FOR NEW CURB INSTALLATION.
2. EXISTING ROOF MOUNTED AIR COOLED CHILLER TO BE DISCONNECTED AND ABANDONED IN PLACE.
3. EXISTING PACKAGED DX ROOFTOP UNIT TO REMAIN.
4. NEW PROGRAMMABLE THERMOSTAT INSTALLED IN SAME LOCATION AS PREVIOUS SENSOR. FIELD VERIFY EXISTING LOCATION.
5. GLOBAL PLASMA SOLUTIONS GPS-4800-AC BIPOLAR IONIZTION DEVICE. INSTALL IN ORIENTATION WHERE DEVICE FACE PANEL IS ACCESSIBLE. FIELD VERIFY EXISTING CONDITIONS.
6. REPLACE EXISTING WALL MOUNTED DIFFUSER WITH DRUM LOUVER.

BID PREPARATION

BASE BID:

BASE BID SHALL INCLUDE ALL BUILDING TRADES WORK ASSOCIATED WITH THE REPLACEMENT OF FAN COIL UNITS, FC-I, & FC-F WITH PACKAGED DX ROOFTOP UNITS, RTU-I, & RTU-F.

ALTERNATE #1:

ALTERNATE #1 SHALL INCLUDE ALL BUILDING TRADES WORK ASSOCIATED WITH THE REPLACEMENT OF FAN COIL UNIT, FC-G, WITH PACKAGED DX ROOFTOP UNIT, RTU-G.

LEGEND

- NEW EQUIPMENT
- NEW DUCT
- EXISTING DUCT & EQUIPMENT TO REMAIN

SIGMA ENGINEERS, PLLC
TBPE Firm No. F-14767
701 S. 15th Street
McAllen, Texas 78501

CITY OF EDINBURG FIRE STATION HVAC IMPROVEMENTS
EDINBURG, TX

STATE OF TEXAS
J. GABRIEL HINOJOSA
96585
LICENSED PROFESSIONAL ENGINEER
07-10-2019

PROJECT NO.: 19011
ISSUED: 04/17/2019
REVISIONS:

NO.	DATE	DESCRIPTION

DRAWN BY: CC
CHECKED BY: GH
SHEET TITLE: MECANICAL PLAN

M-1.1

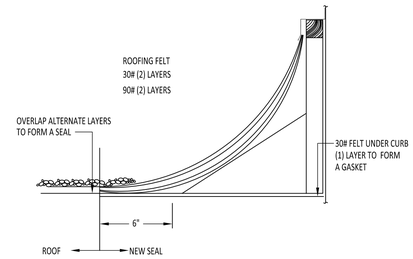

*CURB SEAL - USE WHEN NOT SPECIFIED OTHERWISE BY ARCHITECTURAL

1 CURB SEAL
SCALE: N.T.S.

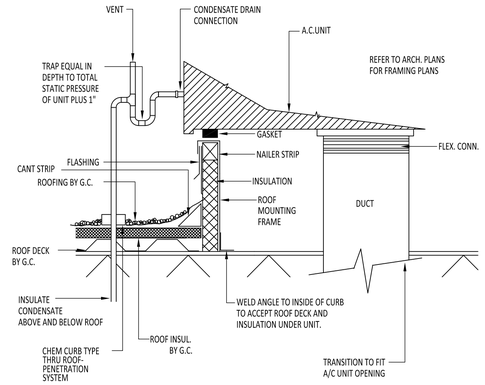

2 ROOF TOP UNIT MOUNTING
SCALE: N.T.S.

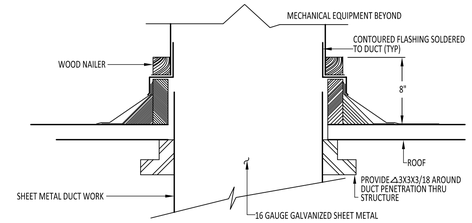

NOTE: PENETRATIONS THROUGH SKYLIGHTS SHALL BE MADE WATERPROOF. SEAL OPEN AREAS OF SKYLIGHT WITH SHEETMETAL AND PROVIDE SHEETMETAL CANT ANGLED TO DRAIN WATER AWAY FROM DUCT PENETRATION AND ONTO ROOF. ALL PENETRATIONS SHALL BE MADE IN ACCORDANCE WITH SMACNA MANUAL OR AS APPROVED BY THE CONTRACTING OFFICER.

3 DUCT ROOF PENETRATION
SCALE: N.T.S.

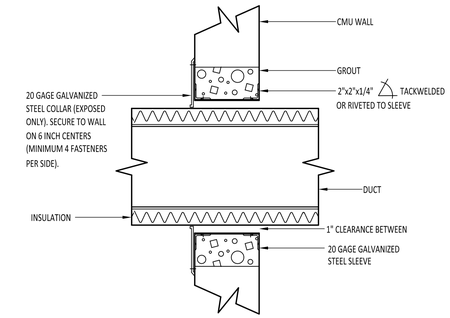

4 DUCT PENETRATION THRU WALL
SCALE: N.T.S.

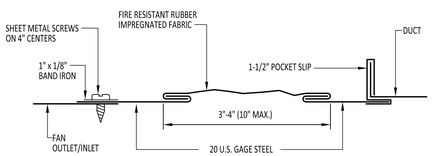

FINISH GRADE

5 FLEXIBLE CONNECTION DETAILS
SCALE: N.T.S.

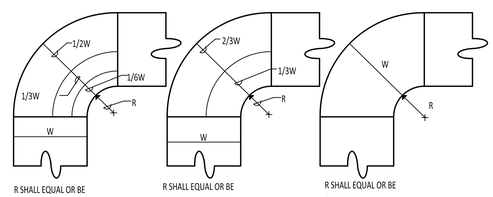

NOTES:

1. THE INTERIOR SURFACE OF ALL RADIUS ELBOWS SHALL BE MADE ROUND
2. ALL STANDARD RADIUS ELBOWS SHOWN ON PLANS MAY BE MADE SHORT RADIUS ELBOWS. ALL SHORT RADIUS ELBOWS SHALL HAVE VANES. VANES SHALL BE CONSTRUCTED, SUPPORTED AND FASTENED AS RECOMMENDED BY SMACNA.

6 RADIUS DUCT ELBOW DETAIL
SCALE: N.T.S.

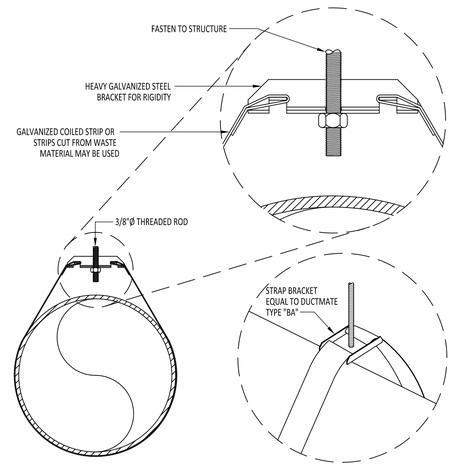

7 ROUND DUCT STRAP BRACKET
SCALE: N.T.S.

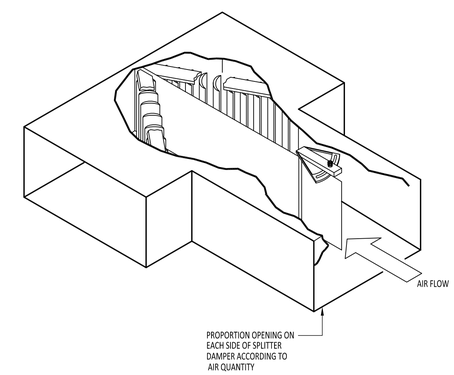

8 TYPICAL SPLITTER DAMPER
SCALE: N.T.S.

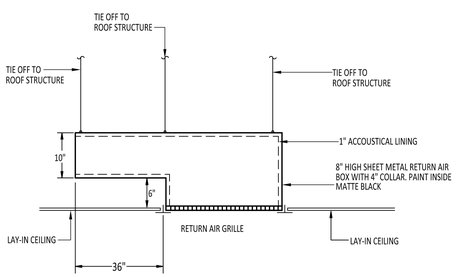

9 RETURN AIR BOOT DETAIL
SCALE: N.T.S.

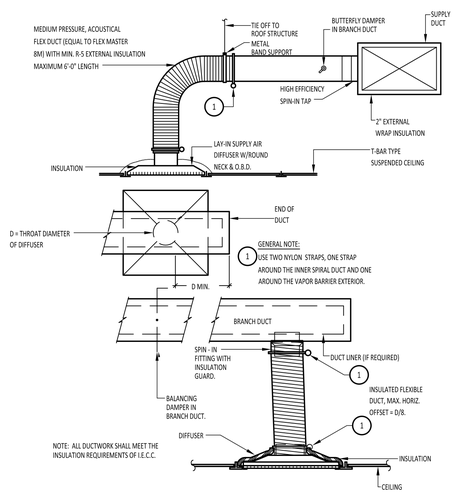

10 SUPPLY AIR DIFFUSER
SCALE: N.T.S.

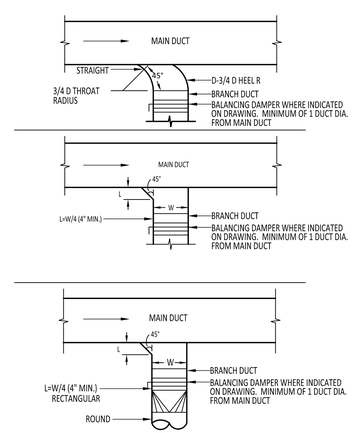

11 TYPICAL BRANCH CONNECTION
SCALE: N.T.S.

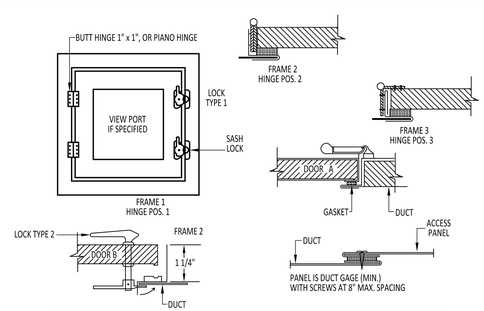

	DOOR SIZE	NO. HINGES	NO. LOCKS	METAL GAGE FRAME	METAL GAGE DOOR	METAL GAGE BACK
2" W.G. STATIC AND LESS	12" x 12" 16" x 20" 24" x 24"	2 2 3	1-S 2-S 2-S	24 22 22	26 24 22	26 26 26
3" W.G. STATIC	12" x 12" 16" x 20" 24" x 24"	2 2 3	1-S 1-S,1-T,1-B 2-S,1-T,1-B	22 20 20	22 20 20	26 26 24
4" W.G. TO 10" W.G.	12" x 12" 16" x 20" 24" x 24"	2 3 3	1-S,1-T,1-B 2-S,1-T,1-B 2-S,2-T,2-B	20 18 18	20 18 18	26 24 24
S = SIDE OPPOSITE HINGES, T = TOP, B = BOTTOM						

12 DUCT ACCESS DOOR DETAIL
SCALE: N.T.S.

SIGMAEN ENGINEERS, PLLC
TBPE Firm No. F-14767
701 S. 15th Street
McAllen, Texas 78501

CITY OF EDINBURG FIRE STATION HVAC IMPROVEMENTS
EDINBURG, TX

STATE OF TEXAS
J. GABRIEL HINOJOSA
96585
LICENSED PROFESSIONAL ENGINEER
07-10-2019

PROJECT NO.: 19011
ISSUED: 04/17/2019
REVISIONS:

NO.	DATE	DESCRIPTION

DRAWN BY: CC
CHECKED BY: GH
SHEET TITLE:
MECHANICAL DETAILS

M-2.0

PACKAGED DX ROOFTOP UNIT SCHEDULE

BASIS OF DESIGN								SUPPLY FAN								DX COIL							ELECTRIC HEAT					FILTER		POWER			NOTES	
MARK	MANUF.	MODEL	LXWXH (IN)	WEIGHT (LB)	AMBIENT TEMP. °F	IEER / SEER	EER	TYPE	DRIVE	AIRFLOW (CFM)	VENT. (CFM)	E.S.P. (IN H20)	T.S.P. (IN H20)	BHP	POWER (HP)	TOTAL CAPACITY (BTU/HR)	SENSIBLE CAPACITY (BTU/HR)	EAT DB/WB °F	LAT DB/WB °F	ROWS (MIN)	FPI (MAX)	MIN COOLING STAGES	EAT(°F) DB	LAT(°F) DB	HEAT (BTU/HR)	HEAT KW	STAGES	FILTER TYPE	DEPTH (IN)	VOLTAGE	MCA	MOCP		PHASE BID
RTU-I	LENNOX	KCB048S4B	84 X 47 X 37	720	102	14 SEER	11.5	DWDI	BELT	1300	250	1.0	1.16	0.55	1	43,744	33,299	79.8/65.4	55.5/53.8	3	14	1	62	89.4	38,470	15.0	1	MERV 8	2	208/3/60	45	45	ALL	BASE BID
RTU-F	LENNOX	KCB060S4B	84 X 47 X 44	828	102	14 SEER	11.8	DWDI	BELT	2150	200	1.0	1.35	1.12	2	59,247	49,612	77.3/64.0	55.5/54.4	4	14	1	67	83.6	38,469	15.0	1	MERV 8	2	208/3/60	49	50	ALL	ALTERNATE #1
RTU-G	LENNOX	KCB060S4B	84 X 47 X 44	828	102	14 SEER	11.8	DWDI	BELT	2250	150	1.0	1.37	1.22	2	59,728	50,732	76.7/63.6	55.5/54.4	4	14	1	68	83.8	38,469	15.0	1	MERV 8	2	208/3/60	49	50	ALL	ALTERNATE #2

NOTES:
1. SINGLE POINT POWER WITH INTEGRAL, NON-FUSED, DISCONNECT.
2. 120V GFCI SERVICE OUTLET, FACTORY MOUNTED, FIELD WIRED.
3. HINGED ACCESS DOORS WITH QUARTER-TURN HANDLES.
4. HAIL GUARDS OR ANGLED CONDENSER COIL.
5. 1 YEAR PARTS, 2ND-5TH YEAR COMPRESSOR PARTS WARRANTY.
6. ON/OFF HOT GAS REHEAT COIL.
7. PROVIDE PROGRAMMABLE THERMOSTAT.
8. PROVIDE WIND RATED ROOF CURB. WIND RATED ATTACHMENTS (CURB TO STRUCTURE AND RTU TO CURB) SHALL BE COMPLIANT WITH THE APPLICABLE IBC, ASCE, AND TEXAS DEPARTMENT OF INSURANCE CODES. WIND CALCS SHALL BE SIGNED AND SEALED BY A TEXAS P.E.
9. PROVIDE 0-30% MOTORIZED OA HOOD.
10. PROVIDE FIELD WIRED GPS IONIZATION DEVICE FOR RTU-I ONLY.
11. CONTACT PERRY MECHANICAL SYSTEMS AT 956-357-2928.

MECHANICAL GENERAL LEGEND DUCTWORK SYMBOLS

DESCRIPTION	SINGLE LINE	DOUBLE LINE
ACCESS DOOR	AD	AD
BACKDRAFT DAMPER	BDD	BDD
FIRE DAMPER	F	F
FLEXIBLE CONNECTION	FC	FC
MOTORIZED DAMPER	M	M
CONTROL DAMPER	CD M	CD M
VOLUME DAMPER, MANUAL	VD	VD
DUCT ELBOW WITH TURNING VANES		
DUCT SECTION - SUPPLY AIR		
DUCT SECTION - EXHAUST AIR		
DUCT SECTION - RETURN, OUTSIDE, OR RELIEF AIR		
DUCT, INCLINED DROP		
DUCT, INCLINED RISE		
FLEXIBLE DUCT - ROUND		8"Ø
DUCT TRANSITION	14/10 10/10	14/10 10/10
DUCT TRANSITION (SQUARE OR RECTANGULAR TO ROUND)	10/10 8"Ø	12/12 8"Ø
RECTANGULAR DUCT, SIZE IN INCHES, FIRST DIMENSION IS SIDE SHOWN (NET CLEAR INSIDE DIMENSION)	10/14	10/14

DESCRIPTION	SINGLE LINE	DOUBLE LINE
ROUND DUCT, DIAMETER IN INCHES (NET CLEAR INSIDE DIMENSION)	8"Ø	8"Ø
AIR FLOW IN DIRECTION OF ARROW		
45°BRANCH TAKE-OFFS		
CONICAL LATERAL BRANCH TAKE-OFFS		
CEILING SUPPLY DIFFUSERS		
DIRECTION SUPPLY GRILLE, HATCH INDICATES BLOCKED QUADRANT		
CEILING RETURN GRILLE/REGISTER		
CEILING EXHAUST FAN (EF-_)		EF-_
CEILING EXHAUST GRILLE/REGISTER		
SIDEWALL SUPPLY GRILLE/REGISTER		
SIDEWALL RETURN/EXHAUST GRILLE/REGISTER		
EXTRACTOR		
DUCT TEE WITH SPLITTER DAMPER		
DOOR UNDERCUT	UC	UC
DOOR LOUVER	L	L

MISCELLANEOUS SYMBOLS

P	DUCT STATIC PRESSURE SENSOR
SD	DUCT SMOKE DETECTOR
CO_2	CARBON DIOXIDE SENSOR
	NEW CONNECTION TO EXISTING
H	HUMIDISTAT
RH	RELATIVE HUMIDITY SENSOR
EJ	EXPANSION JOINT
T	THERMOSTAT OR TEMPERATURE SENSOR (MOUNT 48" AFF)
T	DUCT TEMPERATURE SENSOR
TC	TIME CLOCK
F	FREEZESTAT
	MATCHLINE
	LINE WITH HATCHING DESIGNATES DEMOLITION WORK

- DIFFUSER, GRILLE OR REGISTER MARK
- A 250 / 12"Ø / 6 TYP.: AIR FLOW (CFM); NECK SIZE/ RECTANGULAR FACE SIZE / NOTES; QUANTITY / NOTES (WHERE APPLICABLE)
- 1@300 / 300: QUANTITY OF EXISTING OUTSIDE AIR DIFFUSERS; AIR FLOW (CFM) PER DIFFUSER; TOTAL AIR FLOW (CFM)
- 1@300 / 300: QUANTITY OF EXISTING SUPPLY DIFFUSERS; AIR FLOW (CFM) PER DIFFUSER; TOTAL AIR FLOW (CFM)
- AHU 1: EQUIPMENT MARK; EQUIPMENT NUMBER
- 01 / M2.01: DIRECTION OF SECTION; IDENTIFYING NUMBER OR LETTER FOR SECTIONS; NUMBER OF REFERENCE DRAWING WHERE SECTION IS SHOWN.
- 01 / M2.01: IDENTIFYING NUMBER OR LETTER FOR DETAILS; NUMBER OF REFERENCE DRAWING WHERE DETAIL IS SHOWN.
- ENLARGED DETAIL REFERENCE

GRILLE/DIFFUSER/REGISTER SCHEDULE

MARK	SERVICE	DESCRIPTION	MANUFACTURER MODEL NO.	MAX. NC. LEVEL (1)	REMARKS
A	SUPPLY	24"X24" MODULE SIZE, ALUMINUM, PLAQUE, LAY IN DIFFUSER WITH 4 WAY THROW, ROUND NECK.	TITUS OMNI-AA	30	WHITE FINISH
E	SUPPLY	ALUMINUM DRUM LOUVER WITH INDIVIDUALLY ADJUSTABLE BLADES, MINIMUM 50° ANGLE OF ROTATION, OPPOSED BLADE DAMPER.	TITUS DL	35	WHITE FINISH
G	RETURN	24"X24" EGGCRATE FACE, CEILING RETURN GRILL WITH BORDER FOR LAY-IN CEILING, ALUMINUM CONSTRUCTION.	TITUS 50F	30	WHITE FINISH
M	RETURN	HEAVY DUTY SURFACE MOUNTED ALUMINUM RETURN GRILLE WITH 1/2" BLADE SPACING AND 30° FIXED DEFLECTION.	TITUS 63FL	30	WHITE FINISH

F = THIS WILL DESIFNATE A STEEL FIRE RATED AIR DEVICE TYPE.

CBA = COLOR BY ARCHITECT

* = SEE ARCHITECTURAL DRAWINGS PROPER BORDER TYPES

AIR OUTLET DESIGNATION ON PLANS

MARK — A 250 — AIR FLOW (CFM; 12"Ø — RECTANGULAR FACE SIZE; 6 TYP. — (WHERE APPLICABLE

CAPACITY	FACE	NECK/FLEXIBLE CONNECTION
0-150	6 X 6	6"
151-285	9 X 9	8"
286-440	12 X 12	10"
441-550	12 X 12	12"
551-750	15 X 15	14"
750-1000	18 X 18	16"

NOTE: COORDINATE ALL AIR DEVICE TYPE WITH ARCHITECTURAL RCP.

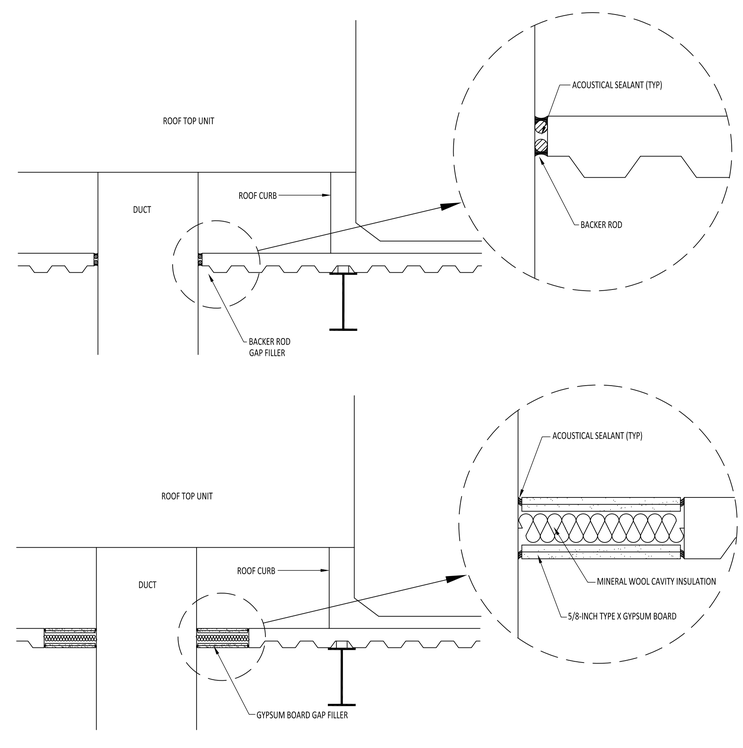

1 MECHANICAL SCHEDULES
SCALE:N.T.S.

2 DUCT PENETRATION DETAIL
SCALE:N.T.S.

SIGMA ENGINEERS, PLLC
TBPE Firm No. F-14767
701 S. 15th Street
McAllen, Texas 78501

CITY OF EDINBURG FIRE STATION HVAC IMPROVEMENTS
EDINBURG, TX

STATE OF TEXAS
J. GABRIEL HINOJOSA
96585
LICENSED
PROFESSIONAL ENGINEER
07-10-2019

PROJECT NO.: 19011
ISSUED: 04/17/2019
REVISIONS:

NO.	DATE	DESCRIPTION

DRAWN BY: CC
CHECKED BY: GH
SHEET TITLE: MECH. SCHEDULES & DETAILS

M-3.0

GENERAL NOTES

GENERAL

1. THE STRUCTURE IS DESIGNED TO BE SELF-SUPPORTING AND STABLE AFTER THE BUILDING IS FULLY COMPLETED. IT IS SOLELY THE CONTRACTOR'S RESPONSIBILITY TO DETERMINE ERECTION PROCEDURE AND SEQUENCE AND TO INSURE THE SAFETY OF THE BUILDING AND ITS COMPONENT PARTS DURING ERECTION. THIS INCLUDES THE ADDITION OF WHATEVER SHORING, SHEETING, TEMPORARY BRACING, GUYS OR TIE DOWNS WHICH MIGHT BE NECESSARY. SUCH MATERIAL SHALL REMAIN THE CONTRACTOR'S PROPERTY AFTER THE COMPLETION OF THE PROJECT.
2. IT IS SOLELY THE CONTRACTOR'S RESPONSIBILITY TO FOLLOW ALL APPLICABLE SAFETY CODES AND REGULATIONS DURING ALL PHASES OF CONSTRUCTION.
3. EQUIPMENT FRAMING LOADS, OPENINGS AND STRUCTURE IN ANY WAY RELATED TO HVAC, PLUMBING, OR ELECTRICAL REQUIREMENTS ARE SHOWN FOR BIDDING PURPOSES ONLY. CONTRACTOR SHALL OBTAIN APPROVAL OF THE INVOLVED TRADES BEFORE PROCEEDING WITH SUCH PORTION OF THE WORK. EXCESS COST RELATED TO VARIATION IN THESE REQUIREMENTS TO BE BORNE BY THE APPROPRIATE CONTRACTOR.
4. SHOULD ANY OF THE DETAILED INSTRUCTIONS SHOWN ON THE PLANS CONFLICT WITH THESE STRUCTURAL NOTES, THE SPECIFICATIONS, OR WITH EACH OTHER, THE STRICTEST PROVISION SHALL GOVERN.
5. REFER TO THE ARCHITECTURAL, MECHANICAL ELECTRICAL AND PLUMBING FOR SLEEVES, CURBS, INSERTS, ETC. NOT SHOWN ON STRUCTURAL DRAWINGS.
6. THE CONTRACTOR SHALL BE RESPONSIBLE FOR COORDINATING THE WORK OF ALL TRADES AND SHALL CHECK ALL DIMENSIONS. ANY DISCREPANCIES SHALL BE CALLED TO THE ATTENTION OF THE ARCHITECT AND BE RESOLVED BEFORE PROCEEDING WITH ANY WORK.
7. THE CONTRACTOR SHALL BE SOLELY RESPONSIBLE FOR ALL EXCAVATION PROCEDURES INCLUDING LAGGING, SHORING AND PROTECTION OF ADJACENT PROPERTY, STRUCTURES, STREETS AND UTILITIES IN ACCORDANCE WITH ALL NATIONAL, STATE, AND LOCAL SAFETY ORDINANCES.
8. THE STRUCTURAL INTEGRITY OF ANY BUILDING RELIES ON THE FULL INTERACTION OF ALL ITS COMPONENT PARTS, WITH NO PROVISIONS MADE FOR CONDITIONS AND/OR SEQUENCES OF CONSTRUCTION AND THE STRUCTURAL DESIGN IS BASED ON THIS PREMISE. THEREFORE THE CONTRACTOR SHALL PROVIDE ADEQUATE BRACING OF SUPERSTRUCTURED DURING CONSTRUCTION.
9. CONTRACTOR SHALL BE RESPONSIBLE FOR RIGID BRACING OF ALL WALLS, FORMWORK, SHORING AND FALSE WORK DURING CONSTRUCTION.
10. CONTRACTOR SHALL VERIFY ALL DROPS, OFFSETS, BLOCKOUTS, FINISHES, AND DIMENSIONS. WITH ARCHITECTURAL PLANS PRIOR TO PROJECT LAYOUT.
11. THE USE OF REPRODUCTION OF THESE CONTRACT DRAWINGS BY ANY CONTRACTOR, ERECTOR, FABRICATOR OR MATERIAL SUPPLIER IN LIEU OF PREPARATION OF SHOP DRAWINGS SIGNIFIES HIS ACCEPTANCE OF ALL INFORMATION SHOWN HEREON AS CORRECT, AND OBLIGATES HIMSELF TO ANY JOB EXPENSE, REAL OR IMPLIED, DUE TO ANY ERRORS THAT MAY OCCUR.
12. CONTRACTOR IS RESPONSIBLE FOR ALL METHODS AND PROCEDURES DURING CONSTRUCTION. CONTRACTOR SHALL TAKE ALL NECCESSARY PRECAUTIONS TO MAINTAIN INTEGRITY OF STRUCTURE DURING CONSTRUCTION.
13. ALL MATERIAL AND WORKMANSHIP SHALL COMPLY WITH THE DRAWINGS, SPECIFICATIONS AND REFERENCE CODE.
14. STRUCTURAL MEMBERS HAVE BEEN LOCATED AND DESIGNED TO ACCOMMODATE THE MECHANICAL EQUIPMENT AND OPENINGS SPECIFIED BY THE MECHANICAL CONSULTANT. ANY SUBSTITUTIONS RESULTING IN REVISIONS TO THE STRUCTURE SHALL BE THE RESPONSIBILITY OF THE CONTRACTOR TO COORDINATE WITH THE STRUCTURAL ENGINEER.
15. THE GENERAL CONTRACTOR AND SUBCONTRACTORS SHALL DETERMINE THE SCOPE OF THE STRUCTURAL WORK FROM THE CONTRACT DOCUMENTS TAKEN AS A WHOLE INCLUDING ARCHITECTURAL AND MECHANICAL DRAWINGS. THE STRUCTURAL SHALL NOT BE CONSIDERED SEPARATELY FOR THE PURPOSES OF BIDDING THE STRUCTURAL WORK. CONTRACTOR SHALL REVIEW THE ENTIRE DRAWING PACKAGE IN ORDER TO DETERMINE THE SCOPE OF STRUCTURAL WORK INCLUDING NECCESSARY COORDINATION SHOWN IN OTHER CONSULTANT DRAWINGS.
16. NOTED SCALES ARE FOR INFORMATIONAL PURPOSES ONLY. CONTRACTOR SHALL NOT SCALE THE DRAWINGS FOR THE PURPOSE OF DETERMINING DIMENSIONAL INFORMATION.
17. ANY ALTERNATES ACCEPTED BY THE OWNER, GENERAL CONTRACTOR OF SUBCONTRACTOR SHALL BE THE RESPONSIBILITY OF THE GENERAL CONTRACTOR TO COORDINATE.
18. PRINCIPAL OPENINGS ARE INDICATED ON THE STRUCTURAL DRAWINGS. OTHER OPENINGS (SLEEVES, BLOCKOUTS, ETC.) ARE SHOWN IN THE ARCHITECTURAL AND MECHANICAL DRAWINGS. CONTRACTOR SHALL SUBMIT TO ARCHITECT AND ENGINEER A PLAN WITH ALL PROPOSED OPENINGS COORDINATED WITH ALL THE TRADES. ADDITIONAL REINFORCEMENT AND/OR STRUCTURAL MEMBERS MAY BE REQUIRED UPON REVIEW.

COORDINATION

1. ONLY LARGER SLEEVE OPENINGS AND FRAMED OPENINGS IN STRUCTURAL FRAMING COMPONENET MEMBERS ARE INDICATED ON THE STRUCTURAL DRAWINGS. HOWEVER, ALL SLEEVES, INSERTS AND OPENINGS, INCLUDING FRAMES AND/OR SLEEVES SHALL BE PROVIDED FOR PASSAGE, PROVISION AND/OR INCORPORATION OF THE WORK OF THE CONTRACT, INCLUDING BUT NOT LIMITED TO ARCHITECTURAL, MECHANICAL, ELECTRICAL AND PLUMBING WORK. THIS WORK SHALL INCLUDE THE COORDINATION OF SIZES, ALIGNMENT, DIMENSIONS, POSITION, LOCATIONS, ELEVATIONS AND GRADES AS REQUIRED TO SERVE THE INTENDED PURPOSE. OPENINGS NOT INDICATED ON THE STRUCTURAL DRAWINGS, BUT REQUIRED AS NOTED ABOVE, SHALL BE SUBMITTED TO THE ENGINEER FOR REVIEW.
2. REFER TO ARCHITECTURAL, MECHANICAL, ELECTRICAL AND PLUMBING DRAWINGS FOR FLOOR ELEVATIONS, SLOPES, DRAINS AND LOCATION OF DEPRESSED AND ELEVATED FLOOR AREAS.
3. COMPABILITY OF THE STRUCTURE AND PROVISIONS FOR BUILDING EQUIPMENT SUPPORTED ON OR FROM STRUCTURAL COMPONENTS SHALL BE VERIFIED AS TO SIZE, DIMENSIONS, CLEARANCES, ACCESSIBILITY, WEIGHTS AND REACTION WITH THE EQUIPMENT FOR WHICH THE STRUCTURE HAS BEEN DESIGNED PRIOR TO SUBMISSION OF SHOP DRAWINGS AND DATA FOR EACH PIECE OF EQUIPMENT AND FOR STRUCTURAL COMPONENTS. DIFFERENCES SHALL BE NOTED ON THE SUBMITTALS.
4. SHOP DRAWINGS SHALL BE PREPARED FOR ALL STRUCTURAL ITEMS AND SUBMITTED FOR REVIEW BY THE ENGINEER. CONTRACT DRAWINGS SHALL NOT BE REPRODUCED AND USED AS SHOP DRAWINGS. ALL ITEMS DEVIATING FROM THE CONTRACT DRAWINGS OR FROM PREVIOUSLY SUBMITTED SHOP DRAWINGS SHALL BE CLOUDED.
5. THE DETAILS DESIGNATED AS "TYPICAL DETAILS" APPLY GENERALLY TO THE DRAWINGS IN ALL AREAS WHERE CONDITIONS ARE SIMILAR TO THOSE DESCRIBED IN THE DETAILS.
6. THE DESIGN AND PROVISION OF ALL TEMPORARY SUPPORTS SUCH AS GUYS, BRACES, FALSEWORK, SUPPORTS AND ANCHORS FOR SAFETY LINES, CRIBBING, OR ANY OTHER TEMPORARY ELEMENTS REQUIRED FOR THE EXECUTION OF THE CONTRACT ARE NOT INCLUDED IN THESE DRAWINGS AND SHALL BE THE RESPONSIBILITY OF THE CONTRACTOR. TEMPORARY SUPPORTS SHALL NOT RESULT IN THE OVERSTRESS OR DAMAGE OF THE ELEMENTS TO BE BRACED NOR ANY ELEMENTS USED AS BRACE SUPPORTS.

CODES

1. BUILDING CODE: 2012 INTERNATIONAL BUILDING CODE WITH CITY OF EDINBURG, TEXAS AMENDMENTS.
2. STRUCTURAL CONCRETE: BUILDING CODE REQUIREMENTS FOR REINFORCED CONCRETE, AMERICAN CONCRETE INSTITURE, ACI 318.
3. STRUCTURAL STEEL: MANUAL OF STEEL CONSTRUCTION, ALLOWABLE STRESS DESIGN, AMERICAN INSTITUTE OF STEEL CONSTRUCTION, NINITH EDITION.
4. ASCE 7–05

DESIGN CRITERIA

1. FRAMING DESIGN IS IN ACCORDANCE WITH THE INTERNATIONAL BUILDING CODE 2012.

WELDING

1. REFERENCES:
   AWS D1.1–86 – "STRUCTURAL WELDING CODE – STEEL"
   AWS D1.3–81 – "STRUCTURAL WELDING CODE – SHEET STEEL"
2. ALL WELDING BY AWS QUALIFIED OPERATORS.

STRUCTURAL STEEL CONNECTIONS

1. WELDING SHALL CONFORM TO ANSI/AWS DI.I, LATEST EDITION.
2. BOLTS SHALL CONFORM TO ASTM A325. BOLTS SHALL BE DESIGNED USING VALUES FOR BEARING TYPE BOLTS WITH THREAD ALLOWED IN THE SHEAR PLANE.
3. ANCHOR BOLTS SHALL BE: ASTM F1554 GR. 36
4. STRUCTURAL STEEL CONNECTION NOT SPECIFICALLY DETAILED ON THE DRAWINGS SHALL BE DESIGNED AND DETAILED BY THE CONTRACTOR UNDER THE DIRECT SUPERVISION OF A REGISTERED ENGINEER LICENSED IN THE STATE OF TEXAS. SEALED CALCULATIONS FOR ALL CONNECTIONS DESIGNED BY THE CONTRACTOR SHALL BE SUBMITTED FOR THE ARCHITECT'S FILES.
5. BEAM CONNECTIONS SHALL BE DESIGNED AND DETAILED AS FOLLOWS, UNLESS NOTED OTHERWISE ON THE DRAWINGS:
   A. CONNECTION SHALL BE AISC TYPE 2 SIMPLE FRAMING CONNECTIONS. SHEAR TAB CONNECTIONS SHALL NOT BE USED.
   B. IN GENERAL, SHOP CONNECTIONS SHALL BE BOLTED OR WELDED AND FIELD CONNECTIONS SHALL BE BOLTED.
   C. WHERE INDICATED, CONNECTIONS SHALL BE DESIGNED FOR THE SCHEDULED SHEAR FORCE, THE SHEAR FORCE INDICATED ON THE DRAWINGS AS "V=", AND THE HORIZONTAL FORCE INDICATED AS "H=".
   D. IF NOT INDICATED ON THE DRAWINGS, CONNECTIONS SHALL BE DESIGNED FOR 55 PERCENT OF THE TOTAL LOAD CAPACITY FOR THE BEAM SPAN SHOWN IN THE BEAM TABLES IN SECTION 2 OF THE AISC MANUAL, NINTH EDITION.
   E. THE MINIMUM NUMBER OF ROWS OF BOLTS SHALL BE 1/6 OF THE BEAM DEPTH WITH ANY FRACTION BE ROUNDED TO THE NEXT HIGHER NUMBER.
   F. BOLTS SHALL BE "SNUG TIGHT", U.N.O.
   G. SHORT SLOTTED HOLES SHALL BE PERMITTED PROVIDED WASHERS ARE INSTALLED IN ACCORDANCE WITH AISC REQUIREMENTS. WASHERS SHALL BE HARDENED WHERE A325 BOLTS ARE UTILIZED.
6. WIND BRACE CONNECTION SHALL BE DESIGNED AND DETAILED AS FOLLOWS, UNLESS NOTED OTHERWISE ON THE DRAWINGS:
   A. CONNECTIONS SHALL BE WELDED.
   B. CONNECTIONS SHALL BE DESIGNED AND DETAILED FOR THE FORCES SHOWN ON THE DRAWINGS.
   C. IF FORCES ARE NOT INDICATED ON THE DRAWINGS, CONNECTIONS SHALL BE DESIGNED TO DEVELOP THE FULL TENSILE CAPACITY OF THE MEMBERS.
7. FOR CONNECTIONS NOT SPECIFICALLY ADDRESSED BY THESE NOTES OR THE DRAWINGS, PROVIDE FILLET WELDS AT ALL CONTACT SURFACES SUFFICIENT TO DEVELOP THE TENSILE STRENGTH OF THE SMALLER MEMBER AT THE JOINT.
8. MOMENT CONNECTIONS INDICATED ON DRAWINGS SHALL BE WELDED TO DEVELOP THE FULL CAPACITY OF THE MEMBER.
9. ROOF EDGE ANGLES SHALL BE CONTINOUS AND SHALL BE SPLICED ONLY AT SUPPORTS. SPLICES SHALL BE BUTT WELDED TO DEVELOP FULL CAPACITY OF THE MEMBER.
10. FILLET WELDS WITH NO SIZE SPECIFIED SHALL BE 3/16" OR MINIMUM SIZE REQUIRED BY AISC, WICHEVER IS LARGER.

STRUCTURAL STEEL

1. MATERIALS:
   A. STRUCTURAL STEEL: W SECTIONS ASTM– A572 FY= 50 KSI
      HSS SECTIONS ASTM– A500 GRADE B
      ALL OTHER SECTIONS ASTM– A36
      HIGH STRENGTH BOLTS: ASTM A325 OR A490
      ANCHOR BOLTS: ASTM A307 OR A36:
      ELECTRODES: SERIES E70
      STRUCTURAL PIPES: ASTM A53 OR A501, FY = 35 KSI
      EXPANSION BOLTS: HILTI "KWIK BOLTS" OR APPROVED EQUAL.
2. SPECIFICATIONS: WELDING PERSONNEL AND PROCEDURES ARE TO BE QUALIFIED PER AWS D1.1. UNLESS SPECIFICALLY SHOWN OTHERWISE, DESIGN, FABRICATION AND ERECTION TO BE COVERNED BY
   A. AISC SPECIFICATION FOR STRUCTURAL STEEL BUILDINGS (JUNE 1, 1989).
   B. AISC CODE OF STANDARD PRACTICE (SEPTEMBER 1, 1986).
   C. STRUCTURAL WELDING CODE, AWS D1.1–88 OF THE AMERICAN WELDING SOCIETY.
   D. SPECIFICATIONS FOR STRUCTURAL JOINTS USING ASTM A325 OR A490 BOLTS (NOVEMBER 13, 1985).
3. CONNECTIONS:
   A. CONNECTIONS TO BE DESIGNED BY THE FABRICATOR TO DEVELOP FULL STRENGTH OF MEMBER.
      FOLLOW INSTRUCTIONS ON DRAWINGS FOR GENERAL ARRANGEMENT OR PARTICULAR DETAILS. FIELD CONNECTIONS TO BE BOLTED. SHOP CONNECTIONS TO BE WELDED OR BOLTED.
   B. FULL PENETRATION AND PARTIAL PENETRATION FIELD WELDS IN MATERIAL OVER 5/16 INCH THICK SHALL BE SUBJECT TO NON–DESTRUCTIVE TESTING (OTHER THAN VISUAL INSPECTION) BY AN INDEPENDENT LABORATORY.
   C. ALL BOLTS IN BRACED FRAMES AND BOLTS IN SHEAR CONNECTIONS USED IN CONJUNCTION WITH FULL PENETRATION FLANGE WELDS SHALL BE SLIP CRITICAL (FRICTION) TYPE.
4. PAINT:
   A. DO NOT PAINT ANY STEEL WHICH WILL BE CONCEALED FROM VIEW. PAINT ALL VISIBLE STEEL GRAY.
5. GALVANIZING: ALL SHELF ANGLES, LINTELS IN EXTERIOR WALLS, AND ALL EXTERIOR STEEL EXPOSED TO THE ELEMENTS SHALL BE GALVANIZED.
6. MISCELLANEOUS:
   A. PROVIDE HOLES FOR OTHERS. IF OPENING IS NOT SHOWN ON THE STRUCTURAL DRAWINGS, OBTAIN PRIOR APPROVAL.
   B. STEEL SUPPORTING OR CONNECTED TO HVAC AND OTHER EQUIPMENT AND ROOF OPENINGS AS SHOWN ON THE DRAWINGS IS SHOWN FOR BIDDING PURPOSES ONLY. CONTRACTOR SHALL RECONCILE EXACT SIZE AND LOCATION BEFORE PROCEEDING WITH HIS WORK.
   C. GROUT UNDER BEARING PLATES, BASE PLATES, AND SETTING PLATES TO BE NON–SHRINKING TYPE.
   D. STEEL BELOW GRADE TO BE PROTECTED BY A MINIMUM OF 3 INCHES OF CONCRETE.
   E. PROVIDE 1/4 INCH THICK SETTING PLATES FOR ALL BEAMS BEARING ON MASONRY WHICH DO NOT REQUIRE A BEARING PLATE.
   F. PROVIDE SHOP WELDED ANCHORS FOR ATTACHMENTS OF MASONRY. SPACING TO BE 16 INCHES ON COLUMNS AND BEAMS.
   G. PROVIDE HEAVY WASHER AT ALL ANCHOR BOLTS.
   H. FINISH ENDS OF ALL COLUMNS, STIFFENERS AND ALL OTHER MEMBERS IN DIRECT BEARING.
   I. PROVIDE BOLT HOLES FOR JOISTS BOLTED TO BEAMS AND ATTACHMENT FOR JOINING EXTENDED JOIST BOTTOM CHORDS.
   J. MINIMUM BEAM BEARING ON MASONRY = 8 INCHES UNLESS NOTED OTHERWISE.
   L. EMBEDMENT LENGTH OF EXPANSION BOLTS INTO SOLID MASONRY OR CONCRETE SHALL BE AS FOLLOWS:
      1/2 INCH DIAMETER BOLTS --- 3 1/2 INCHES EMBEDMENT
      3/4 INCH DIAMETER BOLTS --- 5 INCHES EMBEDMENT
   M. PROVIDE 8,000 LBS. OF RED IRON ALLOWANCE. ALLOWANCE SHALL INCLUDE THE COST OF LABOR.
   N. PROVIDE ADEQUATE AND APPROPRIATE STRUCTURAL STEEL FRAMING APPROVED BY THE ENGINEER, FOR THE SUPPORT AND MOUNTING OF MECHANICAL EQUIPMENT ESTING ON, OR SUSPENDED FROM, STEEL JOISTS, MAXIMUM WEIGHT TO BE HUNG OFF JOISTS BETWEEN "PANEL POINTS" (THE JUNCTURES OF CHORDS AND DIAGONAL WEB MEMBERS) IS 50 LBS. LOADS IN EXCESS OF 50 LBS. REQUIRED JOISTS TO BE MODIFIED OR STRENGTHENED TO CARRY SUCH LOADS.
   O. STEEL STAIRS TO BE DESIGNED AND DETAILED FOR LL=100 PSF BY STEEL FABRICATOR UNDER DIRECT SUPERVISION OF A REGISTERED PROFESSIONAL ENGINEER. SHOP DRAWINGS TO BE SIGNED AND SEALED BY THE SPECIALTY ENGINEER.
   P. QUALITY ASSURANCE:
      A) INSTALLER QUALIFICATIONS: A QUALIFIED INSTALLER SPECIALIZING IN PERFORMING THE WORK OF THIS SECTION WITH A MINIMUM 5 YEARS DOCUMENTED EXPERIENCE.
      B) FABRICATOR QUALIFICATIONS: A QUALIFIED FABRICATOR, SPECIALIZING IN PERFORMING THE WORK OF THIS SECTION WITH A MINIMUM OF 10 YEARS DOCUMENTED EXPERIENCE,THAT PARTIOPATES IN THE AISC QUALITY CERTIFICATION PROGRAM AND IS DESIGNATED AN AISC–CERTIFIED PLANT, CATEGORY STD.
      C) WELDING: QUALITY PROCEDURES AND PERSONNEL ACCORDING TO AWS D1.1, "STRUCTURAL WELDING CODE–STEEL."
   Q. STRUCTURAL FRAMING CONNECTIONS SHALL BE SEATED COLUMN CAPS, CLIP ANGLES WEB PLATES AS SHOWN ON DETAILS. USE A325 HIGH STRENGTH BOLTS OR WELDS SUFFICIENT TO DEVELOP REACTION CAPACITY SHOWN IN AISC MANUAL (9TH EDITION) AS THE ALLOWABLE UNIFORM LOAD/SPAN DIVIDED BY TWO AS SHOWN IN THE (9TH EDITION) OR THE MAXIMUM TOTAL UNIFORM LOAD/SPAN DIVIDED BY TWO AS SHOWN IN TABLES 3–6 THROUGH 3–9 OF THE 13TH EDITION (ASD).

7-10-19
STATE OF TEXAS
C. HINOJOSA, JR.
90636
LICENSED
PROFESSIONAL ENGINEER

CLH
ENGINEERING, INC.
TBPE FIRM No. F-8719
701 S. 15th STREET McALLEN, TX. 78501
(956) 687-5560 (956) 687-5561 FAX

SIGMA ENGINEERS, PLLC
TBPE Firm No. F-14767
701 S. 15th Street
McAllen, Texas 78501

CITY OF EDINBURG FIRE STATION
HVAC IMPROVEMENTS
EDINBURG, TX

PROJECT NO.:
ISSUED: 07/10/2019
REVISIONS:

NO.	DATE	DESCRIPTION

DRAWN BY:
CHECKED BY:
SHEET TITLE:
GENERAL NOTES

S-1.0

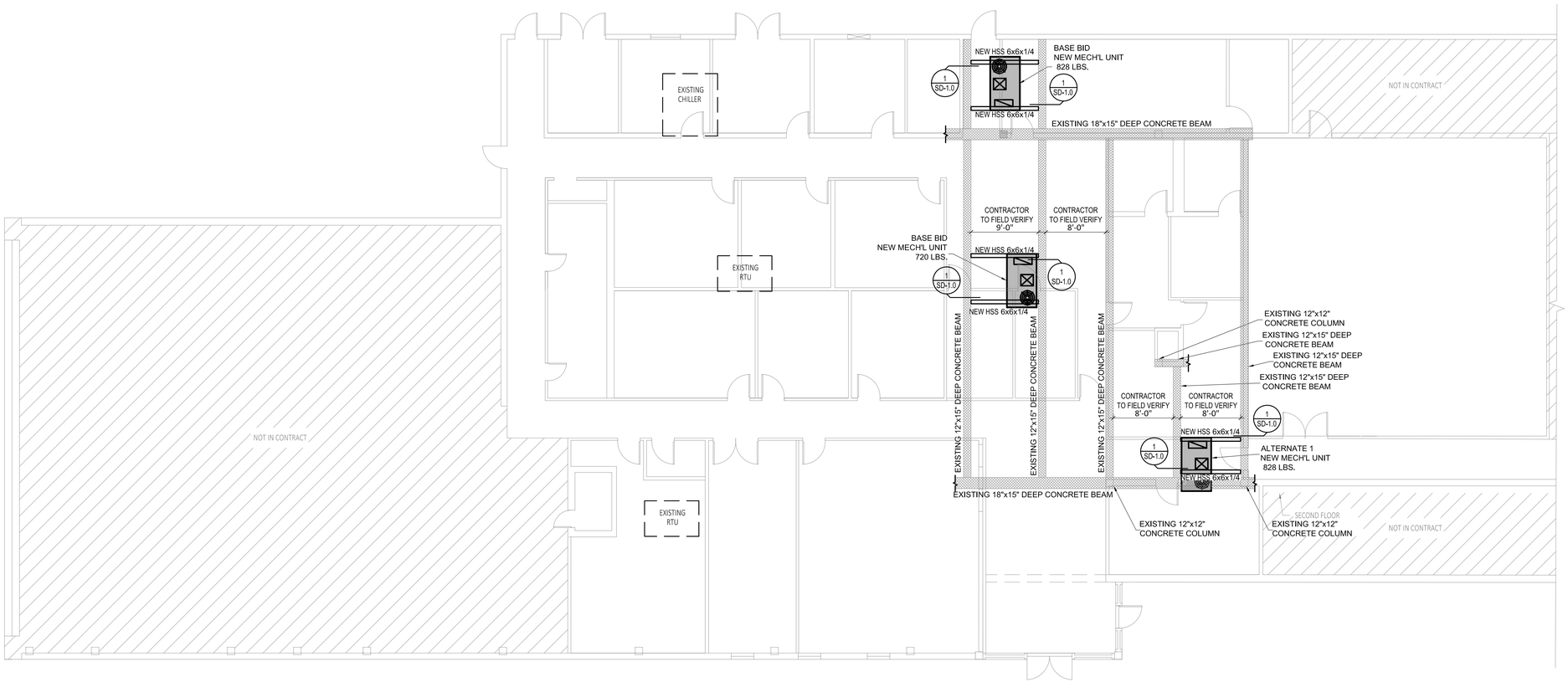

NOTES:

1. ALL STRUCTURAL REINFORCING SHALL BE PLACED WHERE REQUIRED PRIOR TO PLACING NEW MECH'L UNITS.

1 REINFORCING PLAN
SCALE: 1/8"=1'-0"

N

7-10-19
STATE OF TEXAS
C. HINOJOSA, JR.
90636
LICENSED
PROFESSIONAL ENGINEER

CLH
ENGINEERING, INC.
TBPE FIRM No. F-8719
701 S. 15th STREET McALLEN, TX. 78501
(956) 687-5560 (956) 687-5561 FAX

SIGMA ENGINEERS, PLLC
TBPE Firm No. F-14767
701 S. 15th Street
McAllen, Texas 78501

CITY OF EDINBURG FIRE STATION
HVAC IMPROVEMENTS
EDINBURG, TX

PROJECT NO.:
ISSUED: 07/10/2019
REVISIONS:

NO.	DATE	DESCRIPTION

DRAWN BY:
CHECKED BY:
SHEET TITLE:
REINFORCING PLAN

S-2.0

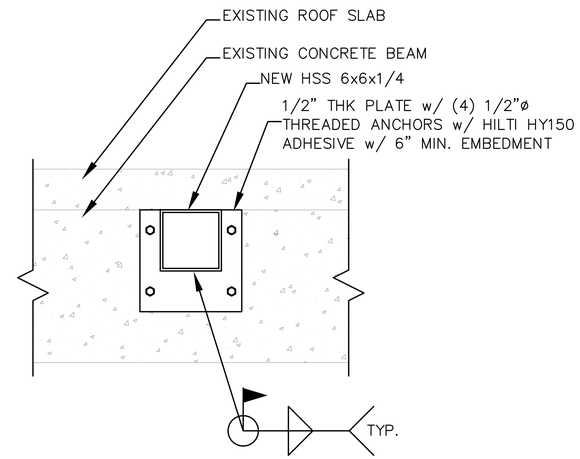

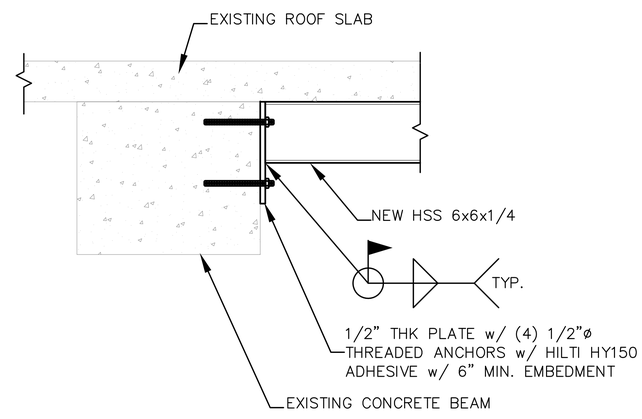

1 REINFORCING DETAIL

SIGMA ENGINEERS, PLLC
TBPE Firm No. F-14767
701 S. 15th Street
McAllen, Texas 78501

CITY OF EDINBURG FIRE STATION
HVAC IMPROVEMENTS
EDINBURG, TX

PROJECT NO.:
ISSUED: 07/10/2019
REVISIONS:

NO.	DATE	DESCRIPTION

DRAWN BY:
CHECKED BY:
SHEET TITLE:
DETAILS PLAN

SD-1.0

7-10-19
STATE OF TEXAS
C. HINOJOSA, JR.
90636
LICENSED
PROFESSIONAL ENGINEER

CLH ENGINEERING, INC.
TBPE FIRM No. F-8719
701 S. 15th STREET McALLEN, TX. 78501
(956) 687-5560 (956) 687-5561 FAX