RAW WATER SUPPLY AND DISTRIBUTION ADDITIONS TO EDINBURG WEST WTP RESERVOIR TWBD - DWSRD

PROJECT NUMBER: 2020-53

CITY OFFICIALS

MR. RICHARD MOLINA	MAYOR
GILBERT ENRIQUEZ	COUNCIL MEMBER
HOMER JASSO JR.	COUNCIL MEMBER
JORGE SALINAS	COUNCIL MEMBER
DAVID TORRES	MAYOR PRO-TEM
RICHARD HINOJOSA	INTERIM CITY MANAGER

APPROVALS:

SUBMITTED FOR APPROVAL BY:

APPROVED BY:

CITY ENGINEER **DATE**

MARDOQUEO HINOJOSA

CONTRACTOR **DATE**

2020

DANNENBAUM

ENGINEERING COMPANY-McALLEN, LLC
1109 Nolana Loop, Suite 208 McAllen, TX 78504 (956) 682-3677
TBPE REGISTRATION No. F-8999

ISSUED FOR BID

Jun 09, 2020 – 11:08am matias.ramos3
G:\1540\4658-02 E Edinburg WTP Reservoir Imps (2019-05)\08 Const Doc Ph\08.01 IFB Dwgs\Sheet Files\001 0000G-001.dwg

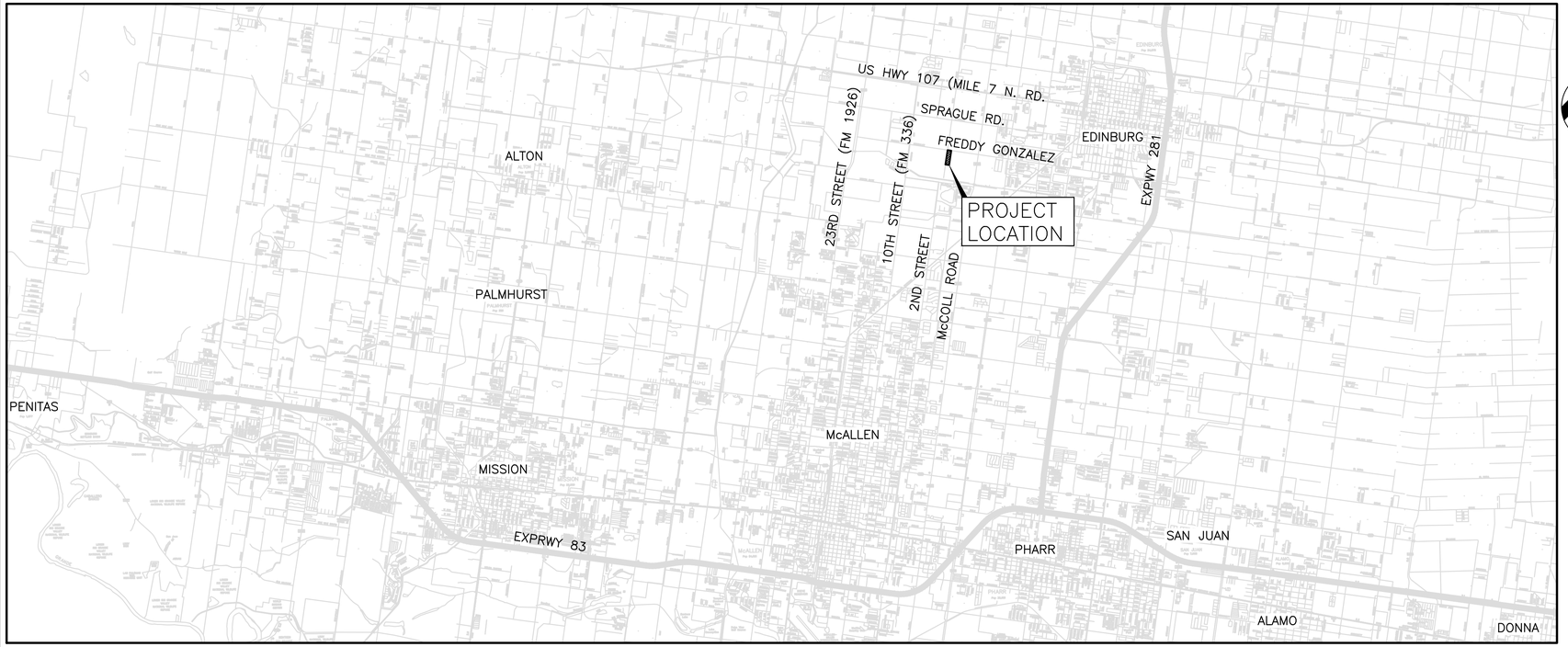

0 6000 12000 18000
SCALE IN FEET

LOCATION MAP

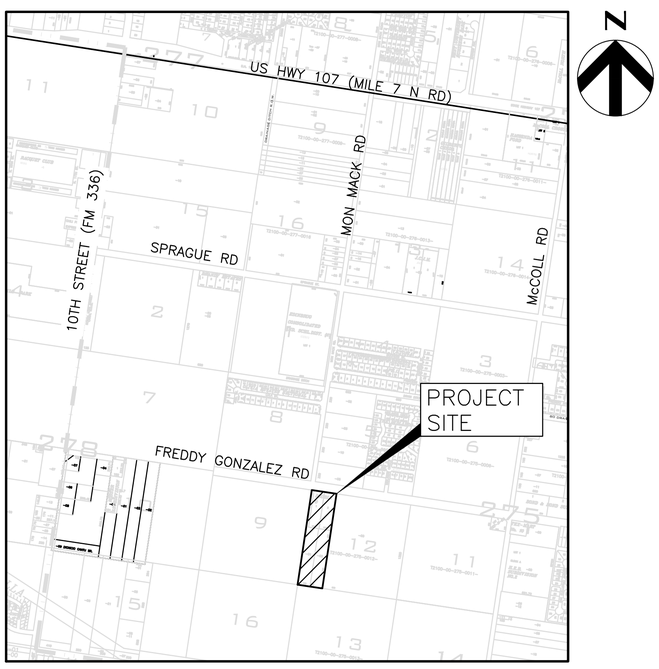

0 1000 2000 3000
SCALE IN FEET

VICINITY MAP

REVISIONS

NO.	DATE		APP.
A	09/01/19	ISSUED FOR REVIEW	
B	06/10/20	ISSUED FOR BID	

DESIGNED BY: CAP
DRAWN BY: MRIII
CHECKED BY: JV
APPROVED BY: RS
DATE: SEPTEMBER 2019

DANNENBAUM
ENGINEERING COMPANY-McALLEN, LLC
1109 Nolana Loop, Suite 209 McAllen, TX 78504 (956) 682-3977
TBPE REGISTRATION No. F-8999

STATE OF TEXAS
NORMAN D. SITZ
63424
REGISTERED PROFESSIONAL ENGINEER
Norman D. Sitz P.E.
6-10-2020

CITY OF EDINBURG
WEST WATER TREATMENT PLANT
RESERVOIR IMPROVEMENTS

LOCATION AND VICINITY MAPS

0 1"
SCALE BAR IS ONE INCH ON ORIGINAL DRAWINGS

PROJECT NO:
4658-02

DRAWING NO:
0000G-002

SHEET NO:
2

May 22, 2020 – 12:25pm matias.ramos3
G:\1540\4658-02 E Edinburg WTP Reservoir Imps (2019-05)\08 Const Doc Ph\08.01 IFB Dwgs\Sheet Files\002 0000G-002.dwg

SHEET INDEX

SHT NO	DWG NO	DESCRIPTION
1	0000G-001	COVER SHEET
2	0000G-002	LOCATION AND VICINITY MAPS
3	0000G-003	SHEET INDEX
4	0000G-004	GENERAL NOTES (1 OF 1)
5	0000G-005	COMMON SYMBOLOGY AND PROCESS FUNCTIONS ABBREVIATIONS

SERIES 0100 RESERVOIR MODIFICATIONS

SHT NO	DWG NO	DESCRIPTION
6	0100C-001	NEW CONSTRUCTION KEY MAP
7	0100C-002	PROPOSED CELL 5 GATEWELL, PIPE, AND PIPE END SECTION PLAN AND PROFILE
8	0100S-001	CELL 5 GATEWELL DETAIL (SHEET 1 OF 2)
9	0100S-002	CELL 5 GATEWELL DETAIL (SHEET 2 OF 2)
10	0100S-003	CELL 5 GATEWELL STAIR DETAILS
11	0100S-004	CELL 5 GATEWELL RAILING DETAILS
12	0100S-005	CELL 5 GATEWELL GRATE REPAIR DETAILS
13	0100S-006	CELL 5 GATEWELL PIPE END SECTION & SLOPE PROTECTION DETAILS
14	0100C-003	PROPOSED CELL 1 PIPE AND HEADWALL PLAN AND PROFILE
15	0100C-004	PROPOSED CELL 2 PIPE AND HEADWALL PLAN AND PROFILE
16	0100S-007	CELL 1 & 2 SLOPE PROTECTION DETAIL
17	0100C-005	DIKE/PIPE EXCAVATION/BACKFILL DIAGRAM
18	0100S-008	CELL 1 AND 2 HEADWALL DETAIL
19	0100S-009	CELL 1 AND 2 DUCKBILL CHECK VALVE DETAIL
20	0100S-010	SLUICE GATE KEY MAP
21	0100S-011	STAND PIPE #1
22	0100S-012	STAND PIPE #2
23	0100S-013	SPLITTER BOX #3
24	0100S-014	GATEWELL #4
25	0100S-015	GATEWELL #9
26	0100S-016	GATEWELL #5
27	0100S-017	STAND PIPE #6
28	0100S-018	STAND PIPE #7
29	0100S-019	SLUICE GATE STEM INSTALLATION DETAILS (SHEET 1 OF 1)
30	EC(1)-09	SW3P: FENCE & BALED HAY
31	EC(3)-93	SW3P: CONSTRUCTION EXITS

GENERAL NOTES:

1. THESE ABBREVIATIONS APPLY TO THE ENTIRE SET OF CONTRACT DRAWINGS.
2. LISTING OF ABBREVIATIONS DOES NOT IMPLY THAT ALL ABBREVIATIONS ARE USED IN THE CONTRACT DRAWINGS.
3. ABBREVIATIONS SHOWN ON THIS SHEET INCLUDE VARIATIONS OF A WORD. FOR EXAMPLE, "MOD" MAY MEAN MODIFY OR MODIFICATION; "INC" MAY MEAN INCLUDED OR INCLUDING AND "REINF" MAY MEAN EITHER REINFORCE OR REINFORCING.

ABBREVIATIONS

ALUM	ALUMINUM
BC	BASE CABINET, BOTTOM CHORD, BOLT CENTER, BOLT CIRCLE
BLK	BLOCK
CLR	CLEAR
CONC	CONCRETE
CONST	CONSTRUCTION
DEG	DEGREE
DIA	DIAMETER
DP	DEPTH
E	EAST
EL	ELEVATION, ELBOW
EXST/EXIST	EXISTING
FL	FLOW LINE, FLOW
HWM	HIGH WATER MARK
IRR	IRRIGATION
LF	LINEAR FOOT
LG	LONG
MACH	MACHINED
MAX	MAXIMUM
MIN	MINIMUM
RCP/RCPS	REINFORCED CONCRETE PIPE/S
REF	REFERENCE
S	SOUTH
SCH	SCHEDULE
SHT	SHEET
SL	SLOPE, STEEL LINLET
SPEC	SPECIFICATION
SS	SERVICE SINK, STAINLESS STEEL
THK	THICK
TYP	TYPICAL
W	WEST, WIDE
WSE	WATER SURFACE ELEVATION
E.S.C.	EROSION/SEDIMENT CONTROL

REVISIONS

NO.	DATE		APP.
A	09/01/19	ISSUED FOR REVIEW	
B	06/10/20	ISSUED FOR BID	R.S.

DESIGNED BY: CAP
DRAWN BY: MRIII
CHECKED BY: JV
APPROVED BY: RS
DATE: SEPTEMBER 2019

DANNENBAUM
ENGINEERING COMPANY-McALLEN, LLC
1109 Nolana Loop, Suite 209 McAllen, TX 78504 (956) 682-3977
TBPE REGISTRATION No. F-8999

STATE OF TEXAS
ROBERT L. SCOTT
63424
REGISTERED PROFESSIONAL ENGINEER
6-10-2020

CITY OF EDINBURG
WEST WATER TREATMENT PLANT
RESERVOIR IMPROVEMENTS

SHEET INDEX

0 1"
SCALE BAR IS ONE INCH ON ORIGINAL DRAWINGS

PROJECT NO: 4658-02
DRAWING NO: 0000G-003
SHEET NO: 3

May 22, 2020 – 12:40pm matias.ramos3
G:\1540\4658-02 E Edinburg WTP Reservoir Imps (2019-05)\08 Const Doc Ph\08.01 IFB Dwgs\Sheet Files\003 0000G-003.dwg

GENERAL NOTES

GENERAL

1. THESE NOTES ARE INTENDED TO SUPPLEMENT THE TECHNICAL SPECIFICATIONS AND SHOULD NOT BE CONSIDERED A SUBSTITUTE FOR THE DETAILED REQUIREMENTS SET FORTH IN THE SPECIFICATIONS. WHERE THERE IS A CONFLICT BETWEEN THE DRAWINGS AND THE SPECIFICATIONS, THE DRAWINGS SHALL GOVERN.
2. REMAINS OF ANY PREVIOUS CONSTRUCTION DETERMINED TO BE IN CONFLICT WITH NEW CONSTRUCTION SHALL BE REMOVED FROM THE SITE DURING SITE PREPARATION. VOIDS LEFT ON THE SITE FROM THE REMOVAL OF PREVIOUS CONSTRUCTION SHALL BE FILLED WITH A MATERIAL APPROVED BY THE ENGINEER.
3. THE OWNER WILL PAY FOR WATER AND ELECTRICAL PERMITS AND PROVIDE WATER.
4. THIS PROJECT IS SUBJECT TO THE AMERICAN IRON AND STEEL (AIS) REQUIREMENTS OF FEDERAL LAW, INCLUDING FEDERAL APPROPRIATION ACTS AND SECTION 1452(a)(4) OF THE SAFE DRINKING WATER ACT (42 §300j–12(A)(4), AS APPLICABLE. ALL IRON AND STEEL PRODUCTS FOR CONSTRUCTION, ALTERATIONS, MAINTENANCE, OR REPAIRS INCORPORATED IN THESE PLANS MUST BE PRODUCED IN THE UNITED STATES.
5. CONTRACTOR SHALL CONTACT DANNENBAUM ENGINEERING COMPANY 48 HOURS PRIOR TO START OF ANY CONSTRUCTION WITHIN PROJECT SITE.
6. THE CONTRACTOR SHALL IMMEDIATELY NOTIFY THE PROJECT ENGINEER OF ANY UNREPORTED OBSTACLES THAT MAY IMPEDE OR PREVENT THE PROPER CONSTRUCTION OF THIS PROJECT.
7. ALL CONSTRUCTION OPERATIONS SHALL BE ACCOMPLISHED IN ACCORDANCE WITH THE APPLICABLE WITH LOCAL REQUIREMENTS, STATE STATUES AND THE U.S. OCCUPATIONAL SAFETY AND HEALTH ADMINISTRATION REGULATIONS (OSHA). COPIES OF THE O.S.H.A. STANDARDS MAY BE PURCHASED FROM THE U.S. GOVERNMENT PRINTING OFFICE. INFORMATION AND RELATED REFERENCE MATERIALS MAY BE OBTAINED FROM O.S.H.A. AT 611 EAST 6TH STREET, ROOM 303, AUSTIN, TEXAS.
8. WORK PERFORMED UNDER THIS CONTRACT IS GOVERNED BY REQUIREMENTS OF SEVERAL PUBLIC, GOVERNMENTAL, AND PRIVATE ENTITIES. CONTRACTOR SHALL COMPLY WITH ALL REQUIREMENTS OF SAID ENTITIES.
9. THE CONTRACTOR SHALL MAINTAIN THE JOB SITE IN A SAFE, NEAT AND WORKMAN LIKE MANNER AT ALL TIMES. JOB SAFETY SHALL NOT BE COMPROMISED. ANY UNSAFE OR UNATTRACTIVE NUISANCE SHALL BE REMOVED OR OTHERWISE TAKEN CARE OF BY THE CONTRACTOR WHEN DIRECTED BY THE OWNER OR PROJECT ENGINEER.
10. CONTRACTOR IS RESPONSIBLE FOR CLEANING MUD AND/OR DIRT TRACKED ONTO EXISTING STREETS BY HIS WORKMEN'S, SUPPLIER'S, OR SUBCONTRACTOR'S VEHICLES. STREETS MUST BE CLEANED WITHIN 2 HOURS OF WHEN THE TRACKING OCCURS. NO SEPARATE PAY.
11. PAVED SURFACES SHALL BE PROTECTED FROM DAMAGE BY TRACKED EQUIPMENT.
12. CONSTRUCTION OF THIS PROJECT WILL BE SUBJECT TO INSPECTIONS AND TESTING AS DEEMED NECESSARY OR APPROPRIATE BY THE OWNER. THE CONTRACTOR SHALL FURNISH INCIDENTAL LABOR AND EQUIPMENT TO ALLOW THE TESTING PERSONNEL ACCESS TO THE WORK AND WILL COOPERATE FULLY WITH THE PERSONS CONDUCTING THE TESTING AND INSPECTION PROGRAM
13. COORDINATION WITH SUPPLIERS OF ATTENDANT COMPONENTS OF A TOTAL SYSTEM WILL BE THE RESPONSIBILITY OF THE CONTRACTOR.
14. A PART OF THE WORK THAT IS NECESSARY OR REQUIRED TO MAKE EACH SYSTEM OR INSTALLATION SATISFACTORY AND OPERABLE FOR ITS INTENDED PURPOSE, EVEN THOUGH IT IS NOT SPECIFICALLY INCLUDED IN THE SPECIFICATIONS OR DRAWINGS, SHALL BE PERFORMED AS INCIDENTAL WORK AS IF IT WERE DESCRIBED IN THE SPECIFICATIONS AND SHOWN ON THE DRAWINGS.
15. THERE WILL BE NO BLASTING ALLOWED ON THIS PROJECT.
16. PRIOR TO CONSTRUCTION, THE CONTRACTOR SHALL PROVIDE DETAILED SHOP DRAWINGS OF ALL MATERIALS AND EQUIPMENT TO BE FURNISHED UNDER THIS CONTRACT. APPROVAL OF SUBMITTALS DOES NOT RELIEVE THE CONTRACTOR FROM COMPLYING WITH THE PLANS AND SPECIFICATIONS.
17. CONTRACTOR SHALL BE RESPONSIBLE FOR MAINTAINING ADEQUATE DRAINAGE AT ALL TIMES DURING CONSTRUCTION OF PROPOSED FACILITIES. CONTRACTOR TO USE PUMPS, TEMPORARY DITCHES, ETC. TO MAINTAIN A WELL DRAINED SITE FREE OF STANDING WATER AND WATER SOFTENED SOILS. ALL REINFORCING STEEL SHALL CONFORM TO ASTM SPECIFICATION A–165, GRADE 60. ALL BARS SHALL CONFORM TO ASTM SPECIFICATION A–305.
18. AREAS USED FOR THE CONTRACTOR'S JOB TRAILER, PERSONNEL PARKING, MATERIAL STORAGE, SPOILS STOCKPILE, MATERIAL FABRICATION AND RELATED CONSTRUCTION USES MUST BE APPROVED BY THE PROJECT ENGINEER AND WILL NOT BE A BONA FIDE EMERGENCY. SPOIL DIRT MAY BE STORED AT THE NORTH END OF THE RESERVOIRS.
19. CONSTRUCTION OPERATIONS SHALL BE CONDUCTED IN SUCH A MANNER TO PROTECT THE EXISTING FACILITIES AT ALL TIMES.
20. THE CONTRACTOR SHALL MAINTAIN ACCESS TO THE PLANT EQUIPMENT FOR THE TREATMENT PLANT OPERATORS AT ALL TIMES DURING THE CONSTRUCTION OF THIS PROJECT.
21. CONTRACTOR SHALL MAINTAIN SECURITY AND OPERATION OF THE TREATMENT FACILITY AT ALL TIMES.
22. ALL EXISTING PAVEMENT, UTILITIES, FENCING, ETC. WHICH IS TO REMAIN AND WHICH IS DAMAGED OR REMOVED WILL BE REPAIRED TO THE SATISFACTION OF THE OWNER AT THE CONTRACTOR'S EXPENSE.
23. CONTRACTOR SHALL OBTAIN ALL CONSTRUCTION PERMITS NOT SUPPLIED BY OWNER AT HIS EXPENSE PRIOR TO COMMENCEMENT OF WORK. REQUIRED PERMITS THAT CAN ONLY BE ISSUED TO CONTRACTOR WILL BE OBTAINED AT HIS EXPENSE.

GENERAL NOTES (CONT.)

24. OFF–SITE DISPOSAL: THE CONTRACTOR SHALL BE RESPONSIBLE FOR DISPOSING OF ALL SPOILS MATERIAL FROM THE CONSTRUCTION SITE. ALL SPOILS MATERIAL SHALL BE DISPOSED OF BY THE CONTRACTOR AT AN APPROVED SPOIL SITE. THE CONTRACTOR SHALL BE RESPONSIBLE FOR LOCATING AND SECURING A PERMIT FOR THE SITE AND SHALL NOTIFY GENERAL PERMIT INSPECTOR AT LEAST FORTY–EIGHT (48) HOURS PRIOR TO DISPOSAL OF THE MATERIAL. THIS ITEM WILL NOT BE PAID FOR DIRECTLY, BUT IT WILL BE CONSIDERED SUBSIDIARY TO OTHER BID ITEMS.
25. STAGING AREA FOR CONSTRUCTION: ALL CONSTRUCTION ACTIVITIES, INCLUDING MATERIAL STORAGE AND STAGING AREA, SHALL BE WITHIN THE CONSTRUCTION LIMITS INDICATED ON THE DRAWINGS. ANY ADDITIONAL AREAS NEEDED FOR CONSTRUCTION AT THIS PROJECT SHALL BE RESPONSIBILITY OF THE CONTRACTOR AND MUST BE APPROVED BY THE OWNER'S REPRESENTATIVE. PERMITS AND ASSOCIATED COSTS SHALL BE THE RESPONSIBILITY OF THE CONTRACTOR.

UTILITIES

1. THE INFORMATION SHOWN ON THESE DRAWINGS INDICATING TYPE AND LOCATION AND ELEVATION OF UNDERGROUND UTILITIES AND SERVICE LINES (WATER, WASTEWATER, GAS, TELEPHONE, ELECTRICAL ETC.) ARE NOT GUARANTEED TO BE EXACT OR COMPLETE. THE LOCATIONS AND SIZES HAVE BEEN TAKEN FROM EXISTING RECORDS AND THE BEST AS–BUILT INFORMATION AVAILABLE; HOWEVER, IT IS EXPECTED THAT THERE MAY BE SOME DISCREPANCIES AND OMISSIONS IN THE LOCATIONS, QUALITIES AND SIZES SHOWN.
2. CONTRACTOR SHALL VERIFY LOCATION AND ELEVATION OF EXISTING FACILITIES PRIOR TO CONSTRUCTION OF PROPOSED FACILITIES (NO SEPARATE PAY). ANY DISCREPANCIES SHALL BE BROUGHT TO THE ATTENTION OF DANNENBAUM ENGINEERING CORPORATION IN WRITING PRIOR TO COMMENCEMENT OF CONSTRUCTION.
3. THE CONTRACTOR SHALL ARRANGE FOR THE REPAIR AND RESTORATION OF CONTRACTOR DAMAGED UTILITIES. THE COST OF ANY REPAIR OR REPLACEMENT SHALL BE THE RESPONSIBILITY OF THE CONTRACTOR.
4. IT IS THE CONTRACTOR'S RESPONSIBILITY TO CONTACT THE CURRENT LINE SPOTTING TOLL FREE NUMBER AND COORDINATE WITH ALL THE UTILITY COMPANIES FOR ACTUAL LOCATING AND UNCOVERING OF EXISTING LINE 48 HOURS PRIOR TO EXCAVATION OPERATIONS.
5. CONTRACTOR SHALL PROTECT EXISTING UNDERGROUND FACILITIES DURING INSTALLATION OF PROPOSED WORK.
6. OVERHEAD LINES MAY EXIST ON THE PROPERTY. LINES HAVE NOT BEEN MARKED SINCE THEY ARE CLEARLY VISIBLE, BUT CONTRACTOR SHOULD LOCATE THEM PRIOR TO CONSTRUCTION. TEXAS LAW, SECTION 752, HEALTH & SAFETY CODE, FORBIDS ALL ACTIVITIES IN WHICH PERSONS OR THINGS MAY COME WITHIN SIX (6) FEET OF LIVE OVERHEAD HIGH VOLTAGE LINES. CONTRACTORS AND OWNERS ARE LEGALLY RESPONSIBLE FOR SAFETY OF CONSTRUCTION WORKERS UNDER THIS LAW. THIS LAW CARRIES BOTH CRIMINAL AND CIVIL LIABILITY.
7. CONTRACTOR TO MAKE ARRANGEMENTS WITH THE APPROPRIATE UTILITY COMPANY FOR SECURING POLES, IF NECESSARY, WHILE CONSTRUCTION PASSES BY POLES. COSTS OF SECURING POLES WILL BE PAID FOR BY THE CONTRACTOR, NO SEPARATE PAY.
8. MAINTAIN A MINIMUM 12–INCHES VERTICAL CLEARANCE BETWEEN ALL UTILITIES, UNLESS OTHERWISE NOTED.
9. RETESTING OF ALL UTILITIES AND ACCEPTANCE BY OWNER SUBSEQUENT TO THE PAVEMENT CONSTRUCTION WILL BE THE UTILITY CONTRACTOR'S RESPONSIBILITY. NO SEPARATE PAY.
10. CONTRACTOR SHALL GIVE NOTICE TO ALL AUTHORIZED INSPECTORS, SUPERINTENDENTS, OR PERSONS IN CHARGE OF PRIVATE AND PUBLIC UTILITIES AFFECTED BY HIS OPERATIONS PRIOR TO COMMENCEMENT OF WORK.

ARCHEOLOGY

1. IF ARCHEOLOGICAL SITES OR HISTORIC STRUCTURES WHICH MAY QUALIFY FOR DESIGNATION AS A STATE ARCHEOLOGICAL LANDMARK ACCORDING TO THE CRITERIA IN 13 TAC 41.6–41.10, OR THAT MAY BE ELIGIBLE FOR LISTING ON THE NATIONAL REGISTER OF HISTORIC PLACES IN ACCORDANCE WITH 36 CFR, PART 800, ARE DISCOVERED AFTER CONSTRUCTION OPERATIONS ARE BEGUN, THE CONTRACTOR SHALL IMMEDIATELY CEASE OPERATIONS IN THE PARTICULAR AREA AND NOTIFY THE OWNER, THE TWDB, AND THE TEXAS HISTORICAL COMMISSION, 1511 N COLORADO ST, PO BOX 12276, CAPITOL STATION, AUSTIN, TEXAS 78711–2276. THE CONTRACTOR SHALL TAKE REASONABLE STEPS TO PROTECT AND PRESERVE THE DISCOVERIES UNTIL THEY HAVE BEEN INSPECTED BY THE OWNER'S REPRESENTATIVE AND THE TWDB. THE OWNER WILL PROMPTLY COORDINATE WITH THE STATE HISTORICAL PRESERVATION OFFICER AND ANY OTHER APPROPRIATE AGENCIES TO OBTAIN ANY NECESSARY APPROVALS OR PERMITS TO ENABLE THE WORK TO CONTINUE. THE CONTRACTOR SHALL NOT RESUME WORK IN THE AREA OF DISCOVERY UNTIL AUTHORIZED TO DO SO BY THE OWNER.
2. STANDARD EMERGENCY CONDITIONS FOR ENDANGERED SPECIES IF A THREATENED OR ENDANGERED SPECIES IS ENCOUNTERED DURING CONSTRUCTION, THE CONTRACTOR SHALL IMMEDIATELY CEASE WORK IN THE ARE OF THE ENCOUNTER AND NOTIFY THE OWNER, WHO WILL IMMEDIATELY IMPLEMENT ACTIONS IN ACCORDANCE WITH ESA AND APPLICABLE STATE STATUES . THESE ACTIONS SHALL INCLUDE REPORTING THE ENCOUNTER TO THE TWDB, THE US FISH AND WILDLIFE SERVICE AND THE TEXAS PARKS AND WILDLIFE DEPARTMENT, OBTAINING ANY NECESSARY APPROVALS OR PERMITS TO ENABLE THE WORK TO CONTINUE, OR IMPLEMENT OTHER MITIGATON ACTIONS. THE CONTRACTOR SHALL NOT RESUME CONSTRUCTION IN THE AREA OF THE ENCOUNTER UNTIL AUTHORIZED TO DO SO BY OWNER.

GENERAL NOTES (CONT.)

REINFORCING STEEL

1. ALL REINFORCING STEEL SHALL CONFORM TO ASTM SPECIFICATION A–165, GRADE 60. ALL BARS SHALL CONFORM TO ASTM SPECIFICATION A–305.
2. ALL STEEL REINFORCEMENT CLEARANCES ABOVE GROUND TO BE 2" AND BELOW GROUND TO BE 3" UNLESS SHOWN OTHERWISE.
3. ALL BAR LAPS SHALL HAVE A MINIMUM LENGTH OF 40 BAR DIAMETER (12" MINIMUM) AT SPLICES, UNLESS OTHERWISE NOTED.

CONCRETE

1. ALL CONCRETE AND FORM WORK SHALL CONFORM TO CURRENT ACI CODE REQUIREMENTS.
2. CONCRETE SHALL DEVELOP 4,000 PSI COMPRESSIVE STRENGTH AT 28 DAYS MIN.
3. ALL GROUT AROUND PIPES EXPOSED TO SEWAGE OR GROUND WATER BE NON–SHRINKING TYPE.
4. CHAMFER ALL EXPOSED CONCRETE EDGES 1".

GATEWELLS/STAND PIPES

1. ALL OUTSIDE ANCHOR BOLTS, WALL INSERTS, ETC. TO BE STAINLESS STEEL OR AS SPECIFIED BY ENGINEER, SHALL BE CAST INTO CONCRETE AT TIME OF POUR. ANCHOR BOLTS, PIPE BRACKETS, ETC. INSIDE OF WETWELL SHALL BE STAINLESS STEEL.
2. HATCH COVERING WETWELL MUST BE SIZED FOR GATES OR PUMPS SUPPLIED. IT IS THE CONTRACTOR'S SOLE RESPONSIBILITY TO INSURE THAT THE HATCH OPENINGS ARE SIZED CORRECTLY FOR THE EASY REMOVAL OF ALL EQUIPMENT SUPPLIED.
3. DIVERS, IF REQUIRED, FOR PLUGGING OF PIPES TO GATEWELLS/STAND PIPES ARE THE RESPONSIBILITY OF THE CONTRACTOR. COST FOR DIVERS, AND THEIR EQUIPMENT AND SUPPLIES SHALL BE INCIDENTAL TO THE COST OF THE SLUICE GATE REMOVAL/REPLACEMENT.

BYPASS PUMPING

1. BYPASS PUMPING MAY BE REQUIRED, SUBJECT TO CONTRACTOR'S CONSTRUCTION "MEANS AND METHODS".
2. THE CONTRACTOR SHALL MAINTAIN A MINIMUM FLOW OF 12 MGD TO THE WEST WTP AND 8 MGD TO THE NORTH WTP. FOR A COMBINING RATE OF 20 MGD. BOTH PLANTS ARE FED OUT OF THE WEST WTP RESERVOIR.
3. THE CONTRACTOR IS TO SUBMIT PUMPING PLAN TO THE ENGINEER FOR APPROVAL PRIOR TO COMMENCING WORK.

GRADING

1. FINISHED GRADE ELEVATIONS SHOWN ARE INTENDED TO PROVIDE DRAINAGE AWAY FROM THE TREATMENT PLANT FACILITIES, MINOR FIELD CHANGES MAY BE NECESSARY TO PROVIDE ADEQUATE DRAINAGE. GRADE UNIFORMLY BETWEEN ELEVATIONS SHOWN ON THE PLANS.

SURVEY

1. IRON RODS DISTURBED DURING CONSTRUCTION TO BE REPLACED BY REGISTERED PUBLIC LAND SURVEYOR TO ORIGINAL PROPERTY CORNER AT NO SEPARATE PAY.
2. CONSTRUCTION STAKING (ALIGNMENT AND GRADE) TO BE PROVIDED BY THE CONTRACTOR AT NO SEPARATE PAY.

GEOTECHNICAL

1. GEOTECHNICAL INFORMATION WAS PREPARED FOR USE IN ESTABLISHING THE DESIGN CONTROLS FOR THIS PROJECT. GEOTECHNICAL INFORMATION INCLUDED IN THESE DOCUMENTS IS PROVIDED FOR INFORMATIONAL PURPOSES ONLY , AND IS NOT TO BE CONSTRUCTED AS BEING ACCURATE REPRESENTATION OF SUB SOIL CONDITIONS. IT SHALL BE THE CONTRACTOR'S RESPONSIBILITY TO DETERMINE WHAT THE ACTUAL SUBSURFACE CONDITIONS ARE.
2. ANY ADDITIONAL SOIL BORINGS THE CONTRACTOR REQUIRES ARE TO BE DONE BY THE CONTRACTOR AT HIS EXPENSE.

EXCAVATION & BACKFILL

1. ALL EXCAVATION FOR THIS PROJECT SHALL BE UNCLASSIFIED.
2. SURPLUS EXCAVATED MATERIAL. IF THE ENGINEER NOTIFIES THE CONTRACTOR THAT THE OWNER DOES NOT HAVE USE FOR THIS MATERIAL, THE SURPLUS MATERIAL BECOMES THE PROPERTY OF THE CONTRACTOR AND IT IS HIS RESPONSIBILITY TO DISPOSE OF THE MATERIAL OFF–SITE.
3. AS SOON AS PRACTICAL, ALL PORTIONS OF EXCAVATIONS NOT OCCUPIED BY THE PERMANENT STRUCTURE SHALL BE BACKFILLED. BACKFILL MATERIAL SHALL BE FREE FROM LUMPS, WOOD OR OTHER EXTRANEOUS MATERIAL LARGER THAN 2–INCHES IN DIAMETER. BACKFILL SHALL BE PLACED IN 8–INCH MAXIMUM LOOSE LIFTS AND SHALL BE COMPACTED TO A DENSITY COMPARABLE WITH THE ADJACENT UNDISTURBED MATERIAL.
4. AT THE END OF THE PROJECT, ANY EXCESS DIRT NOT DESIGNATED AS SURPLUS MATERIAL SHALL BE SMOOTHLY GRADED TO MERGE CONTOURS WITH THE BERM, AND SHALL BE SEEDED IN ACCORDANCE WITH SECTION 02921 HYDROMULCH SEEDING.

GENERAL NOTES (CONT.)

TRAFFIC CONTROL PLAN

1. WHERE CONTRACTOR'S WORK AND/ OR EQUIPMENT CAUSES AN OBSTRUCTION TO TRAFFIC, CONTRACTOR SHALL PROVIDE AND INSTALL TRAFFIC CONTROL DEVICES IN ACCORDANCE WITH PART VI OF THE "TEXAS MANUAL ON UNIFORM TRAFFIC CONTROL DEVICES" (TEXAS M.U.T.C.D., MOST RECENT EDITION AS REVISED) DURING CONSTRUCTION. A WRITTEN TRAFFIC CONTROL PLAN SHALL BE SUBMITTED PRIOR TO CONSTRUCTION FOR REVIEW BY THE ENGINEER & OTHER APPROPRIATE PERSONS.

SEQUENCE OF CONSTRUCTION

1. INSTALL TEMPORARY EROSION CONTROLS PER APPROVED SWPPP PLANS PRIOR TO BEGINNING CONSTRUCTION. INSTALL CONSTRUCTION ACCESS AND BEGIN SETUP TRUCK WASHDOWN AREAS AND STAGING AREAS. (NO ADDITIONAL PAY FOR SETTING UP WASHDOWN AND STAGING AREAS)
2. THE CONTRACTOR SHALL SUBMIT A DETAILED SCHEDULE OF CONSTRUCTION THAT REFLECTS THE CONSTRUCTION PHASES AND UNDERLINES CRITICAL PATHS.
3. CONTACT CITY'S REPRESENTATIVE TO SCHEDULE ON–SITE PRE–CONSTRUCTION COORDINATION MEETING.
4. SITE CLEARING AND PREPARATION.
5. CONDUCT CONSTRUCTION SURVEY AND SET TWO PERMANENT BENCHMARKS. (NO ADDITIONAL PAY FOR PERMANENT BENCHMARKS)
6. BEGIN EXCAVATION FOR UNDERGROUND STRUCTURES, CONSTRUCT PIPE LINES, WET WELL(S) WITH ALL THE APPURTENANCES, AND ALL OTHER STRUCTURES PER CONSTRUCTION DRAWINGS.
7. ESTABLISH PERMANENT VEGETATION.
8. SCHEDULE SUBSTANTIAL COMPLETION WALK–THROUGH
9. SCHEDULE FINAL WALK–THROUGH
10. CLEAN, REMOVE ALL EROSION CONTROLS.

STRUCTURAL

1. ANY REQUIRED CHANGES TO THE STRUCTURAL DRAWINGS RESULTING FROM THE ACCEPTANCE OF ALTERNATES AND/OR SUBSTITUTIONS ARE THE RESPONSIBILITY OF THE CONTRACTOR AND SHALL BE SUBMITTED TO THE ENGINEER FOR APPROVAL.

CLEARING AND GRUBBING

1. CONTRACTOR SHALL LIMIT CLEARING OF VEGETATION ON RESERVOIR DIKES TO THAT REQUIRED FOR ACCESS TO THE CONSTRUCTION AREAS.
2. CLEARING SHALL BE PERFORMED BY CUTTING ONLY WITHOUT DISTURBING THE DIKES.
3. ANY DAMAGE TO THE DIKES SHALL BE REPAIRED BY THE CONTRACTOR AS DIRECTED BY THE ENGINEER
4. DISPOSAL OF REMOVED VEGETATION SHALL BE THE RESPONSIBILITY OF THE CONTRACTOR. (NO SEPARATE PAY)

EROSION/SEDIMENT CONTROL

1. TEMPORARY EROSION/SEDIMENTATION CONTROL AND TREE/NATURAL AREA PROTECTION MEASURES:

a. THE CONTRACTOR SHALL INSTALL EROSION/SEDIMENTATION CONTROLS (E.S.C.) PRIOR TO ANY SITE PREPARATION WORK (CLEARING, GRUBBING, GRADING, OR EXCAVATION).

b. THE PLACEMENT OF EROSION/SEDIMENTATION CONTROLS(E.S.C) SHALL BE IN ACCORDANCE WITH TCEQ STANDARDS.

c. PRE–CONSTRUCTION CONFERENCE SHALL BE HELD PRIOR TO BEGINNING CONSTRUCTION. THIS CONFERENCE IS TO TAKE PLACE ON THE SITE AT WHICH TIME THE PLAN FOR EROSION AND SEDIMENT CONTROL SHALL BE DEVELOPED IF NEEDED. PRESENTLY IT IS ANTICIPATED THAT APPROXIMATELY 100 LINEAR FEET OF SEDIMENT CONTROL FENCING MAY BE REQUIRED AT CELL #5.

d. ANY SEDIMENT BUILD–UP OCCURRING AFTER A SIGNIFICANT RAIN SHALL BE REMOVED AND PLACED IN THE AGREED UPON DESIGNATED SPOIL DISPOSAL SITE.

CHAINLINK FENCE

1. REMOVE AND REPLACE EXISTING CHAINLINK AND APPURTENANCES AS NECESSARY TO PERFORM CONSTRUCTION.
2. DAMAGED FENCING AND APPURTENANCES SHALL BE REPLACED AT CONTRACTOR'S EXPENSE.

SAFETY

1. EXCAVATIONS, TRENCHES AND OTHER HAZARDOUS AREAS SHALL BE ADEQUATELY PROTECTED BY BARRICADES, FENCING, LIGHTS AND/OR OTHER PROTECTIVE DEVICES AT ALL TIMES.

REVISIONS

NO.	DATE		APP.
A	09/01/19	ISSUED FOR REVIEW	
B	06/10/20	ISSUED FOR BID	R.S.

DESIGNED BY: CAP
DRAWN BY: MRIII
CHECKED BY: JV
APPROVED BY: RS
DATE: SEPTEMBER 2019

DANNENBAUM
ENGINEERING COMPANY-McALLEN, LLC
1109 Nolana Loop, Suite 209 McAllen, TX 78504 (956) 682-3977
TBPE REGISTRATION No. F-8999

STATE OF TEXAS
JOSEPH VALDEZ
JR. JOSEPH VALDEZ
REGISTERED PROFESSIONAL ENGINEER
108018
6-10-2020

CITY OF EDINBURG
WEST WATER TREATMENT PLANT
RESERVOIR IMPROVEMENTS

GENERAL NOTES
1 OF 1

0 1"
SCALE BAR IS ONE INCH ON ORIGINAL DRAWINGS

PROJECT NO: 4658-02
DRAWING NO: 0000G-004
SHEET NO: 4

May 22, 2020 – 12:25pm matias.ramos3
G:\1540\4658-02 E Edinburg WTP Reservoir Imps (2019-05)\08 Const Doc Prh\08.01 IFB Dwgs\Sheet Files\004 0000G-004.dwg

SITE PLAN SYMBOLOGY

- EMBANKMENT SLOPE
- 50.5 — PROP CONTOUR
- 50.5 — EXIST CONTOUR
- VEGETATION (SIZE)
- CO — CLEANOUT
- MH — MANHOLE
- MW — MONITORING WELL
- PZ — PIEZOMETER
- CB — STORM DRAIN CATCH BASIN
- UV — UTILITY VAULT
- PP — POWER POLE
- TP — TELEPHONE POLE
- FH — FIRE HYDRANT
- YH–X — YARD HYDRANT
- 75.5 — EXISTING SPOT ELEVATION
- 75.8 — FINISHED SPOT ELEVATION
- CP–X — HORIZONTAL CONTROL POINT
- BENCHMARK
- TH–"X" — IDENTIFICATION AND APPROXIMATE LOCATION OF SOIL TEST HOLE
- DOWNGUY
- EXTERIOR PAD MOUNTED TRANSFORMER
- POLE – MOUNTED TRANSFORMER
- Y — ELECTRICAL HANDHOLE OR MANHOLE Y – MHX OR HHX, WHERE X INDICATES SEQUENCE NUMBER

NOTES:

1. UTILITIES THAT ARE SUSPENDED ABOVE GRADE ARE DESIGNATED BY THE PREFIX "OH" (OVERHEAD).

- T — TELEPHONE LINE
- E — ELECTRIC LINE
- F — FIBER OPTIC
- C — COMMUNICATION
- HANDRAIL AND GUARDRAIL
- PIPELINE
- LARGE PIPELINE
- UTILITY BENEATH STRUCTURE
- RAILROAD
- DRAINAGE FLOW
- NATURAL WATERWAY
- X — X — CHAIN LINK FENCE
- X — X — FIELD FENCE
- PROPERTY LINE
- CENTERLINE
- RB — ROCK BERM
- SF — SILT FENCE
- EASEMENT
- LIMITS OF CONSTRUCTION
- ROW

MATERIALS IN PLAN/SECTION

- ACOUSTICAL CEILING TILE (SECTION)
- ASPHALT (PLAN OR SMALL–SCALE SECTION)
- ASPHALT (LARGE–SCALE SECTION)
- BATT INSULATION (SECTION)
- BRICK MASONRY (PLAN AND/OR SECTION)
- CHECKERED PLATE (PLAN)
- CONCRETE (PLAN AND/OR SECTION)
- CONCRETE MASONRY (PLAN AND/OR SECTION)
- DEMOLITION (PLAN AND/OR SECTION)
- EARTH (SECTION)
- FILTER POINT MAT (PLAN)
- FINISHED WOOD (SECTION)
- GLULAM LUMBER (SECTION)
- GRANULAR FILL (SECTION)
- GRATING (SECTION)
- GRATING (PLAN)
- GROUT (SECTION)
- GYPSUM BOARD (SECTION)
- METAL (SECTION)
- ORIENTED STRAND BOARD (SECTION)
- PARTICLE BOARD (SECTION)
- PLYWOOD (LARGE–SCALE SECTION)
- PLYWOOD (SMALL–SCALE SECTION)
- PRECAST CONCRETE (PLAN AND/OR SECTION)
- RIGID INSULATION (SECTION)
- RIPRAP (PLAN AND/OR SECTION)
- SAND (SECTION)
- SOD (SECTION)
- WEEP JOINT MORTAR PROTECTION SYSTEM (SECTION)
- WOOD – CONTINUOUS (SECTION)
- WOOD BLOCKING (SECTION)

GENERAL SYMBOLOGY

ARROW INDICATES DIRECTION OF PLAN NORTH — N

PLAN
SCALE: 1/4" = 1'–0"
PLAN TITLE

SECTION LETTER
FLAG INDICATES DIRECTION OF SECTION CUT
X / XXX
SHEET WHERE SECTION IS LOCATED *
SECTION CUT MARKER

SECTION LETTER
SECTION
SCALE: 3/8" = 1'–0"
X / XXX
SHEET WHERE SECTION VIEW IS FIRST CUT *
SECTION TITLE

DETAIL NUMBER
X / XXX
SHEET WHERE DETAIL IS LOCATED *
DETAIL MARKER
FOR REFERENCING DETAILS INCLUDED IN DRAWING SET.

XXXXXXXXX
DETAIL MARKER
FOR REFERENCING DETAILS BOUND IN SPECIFICATIONS OR SEPARATE VOLUME.

DETAIL NUMBER
DETAIL
SCALE: 3" = 1'–0"
X / XXX
SHEET WHERE DETAIL WAS CALLED OUT
DETAIL TITLE

ELEVATION NUMBER
ARROW INDICATES POINT OF VIEW
X / XXX
SHEET WHERE ELEVATION IS LOCATED *
SINGLE ELEVATION OR PHOTO MARKER

ELEVATION NUMBER
ARROW INDICATES POINT OF VIEW ELEVATION
A B C D
X / XXX
INDICATES SHEET WHERE ELEVATION IS LOCATED
MULTIPLE ELEVATION OR PHOTO MARKER

ELEVATION IDENTIFICATION NUMBER
ELEVATION
SCALE: 3" = 1'–0"
X / XXX
SHEET WHERE POINT OF VIEW MARKER CAN BE FOUND *
ELEVATION TITLE

* FOR COMMON DETAILS AND SECTIONS OR DETAILS THAT ARE CUT OR CALLED OUT ON MULTIPLE SHEETS, THE SHEET NUMBER IS REPLACE BY A DASH (–).

TARGET ELEVATION

ARCHITECTURAL

- ROOM NAME / XX–XX — ROOM NUMBER
- XXX / X — DOOR NUMBER
- A — COLUMN GRID LINE
- X — WALL TYPE
- X — WINDOW TYPE
- X — LOUVER
- X — ACCESSORY, FURNITURE, AND MISCELLANEOUS EQUIPMENT IDENTIFIER

KEY NOTE DESIGNATION

- # — KEY NOTE NUMBER

GENERAL LINE SYMBOLOGY

- 4–HOUR FIRE RATED WALL
- 3–HOUR FIRE RATED WALL
- 2–HOUR FIRE RATED WALL
- 1–HOUR FIRE RATED WALL
- COLUMN GRID LINE/CENTERLINE

IDENTIFICATION SYMBOLOGY

PIPING

FIGURE: 36–RW
- LINE SIZE — 36"
- SERVICE — PLANT EFFLUENT

EXAMPLE

EQUIPMENT IDENTIFICATION

FIGURE: RWP–0201
- SERVICE ABBREVIATION — INDICATES RAW WATER PUMP
- AREA DESIGNATION — AREA 0200
- EQUIPMENT NUMBER — PUMP 01

EXAMPLE

SHEET NAMING CONVENTION

AREA DESIGNATION

0000	GENERAL
0100	SITE
0110	GRADING
0120	YARD PIPING
0130	SERVICE WATER & CHEMICAL LINES
0140	ROADS
0150	RAW WATER PUMP STATION
0160	SWPPP
0200	RAPID MIXER
0300	CLARIFIERS & CLARIFIER SLUDGE PUMP STATION
0400	FILTRATION & BACKWASH PUMPING
0500	GROUND STORAGE TANK & HIGH SERVICE PUMP STATION
0600	WASHWATER RECOVERY BASIN
0700	MAINTENANCE BUILDING
0800	CHEMICAL FEED BUILDING
0900	SLUDGE THICKENER PUMP STATION
1000	SLUDGE DEWATERING FACILITY
1100	ELECTRICAL BUILDING

DISCIPLINE DESIGNATOR & DISCIPLINE ORDER

G	GENERAL
V	SURVEYING/MAPPING
B	GEOTECHNICAL
C	CIVIL
S	STRUCTURAL
A	ARCHITECTURAL
D	PROCESS
M	MECHANICAL (HVAC)
P	PLUMBING
E	ELECTRICAL
Y	INSTRUMENTATION

EXAMPLE

FILTERS PLAN PROCESS, SHEET 01

0	4	0	0					

AREA DESIGNATION

				D				

DISCIPLINE DESIGNATOR

					–	0	0	1

SHEET NUMBER

GENERAL NOTES:

1. THIS IS A STANDARD SHEET SHOWING COMMON SYMBOLOGY. ALL SYMBOLS ARE NOT NECESSARILY USED ON THIS PROJECT.
2. SCREENING OR SHADING OF WORK IS USED TO INDICATE EXISTING COMPONENTS OR TO DE–EMPHASIZE PROPOSED IMPROVEMENTS TO HIGHLIGHT SELECTED TRADE WORK. REFER TO CONTEXT OF EACH SHEET FOR USAGE.

REVISIONS

NO.	DATE		APP.
A	09/01/19	ISSUED FOR REVIEW	
B	06/10/20	ISSUED FOR BID	

DESIGNED BY: CAP
DRAWN BY: MRIII
CHECKED BY: JV
APPROVED BY: RS
DATE: SEPTEMBER 2019

DANNENBAUM
ENGINEERING COMPANY-McALLEN, LLC
1109 Nolana Loop, Suite 209 McAllen, TX 78504 (956) 682-3977
TBPE REGISTRATION No. F-8999

STATE OF TEXAS — RICHARD SCOTT FLETCHER — 63424 — REGISTERED PROFESSIONAL ENGINEER — 6-10-2020

CITY OF EDINBURG
WEST WATER TREATMENT PLANT
RESERVOIR IMPROVEMENTS

COMMON SYMBOLOGY
AND PROCESS FUNCTION ABBREVIATIONS

0 — 1"
SCALE BAR IS ONE INCH ON ORIGINAL DRAWINGS

PROJECT NO: 4658-02
DRAWING NO: 0000G-005
SHEET NO: 5

May 22, 2020 – 12:25pm matias.ramos3
G:\1540\4658–02 E Edinburg WTP Reservoir Imps (2019–05)\08 Const Doc Ph\08.01 IFB Dwgs\Sheet Files\005 0000G–005.dwg

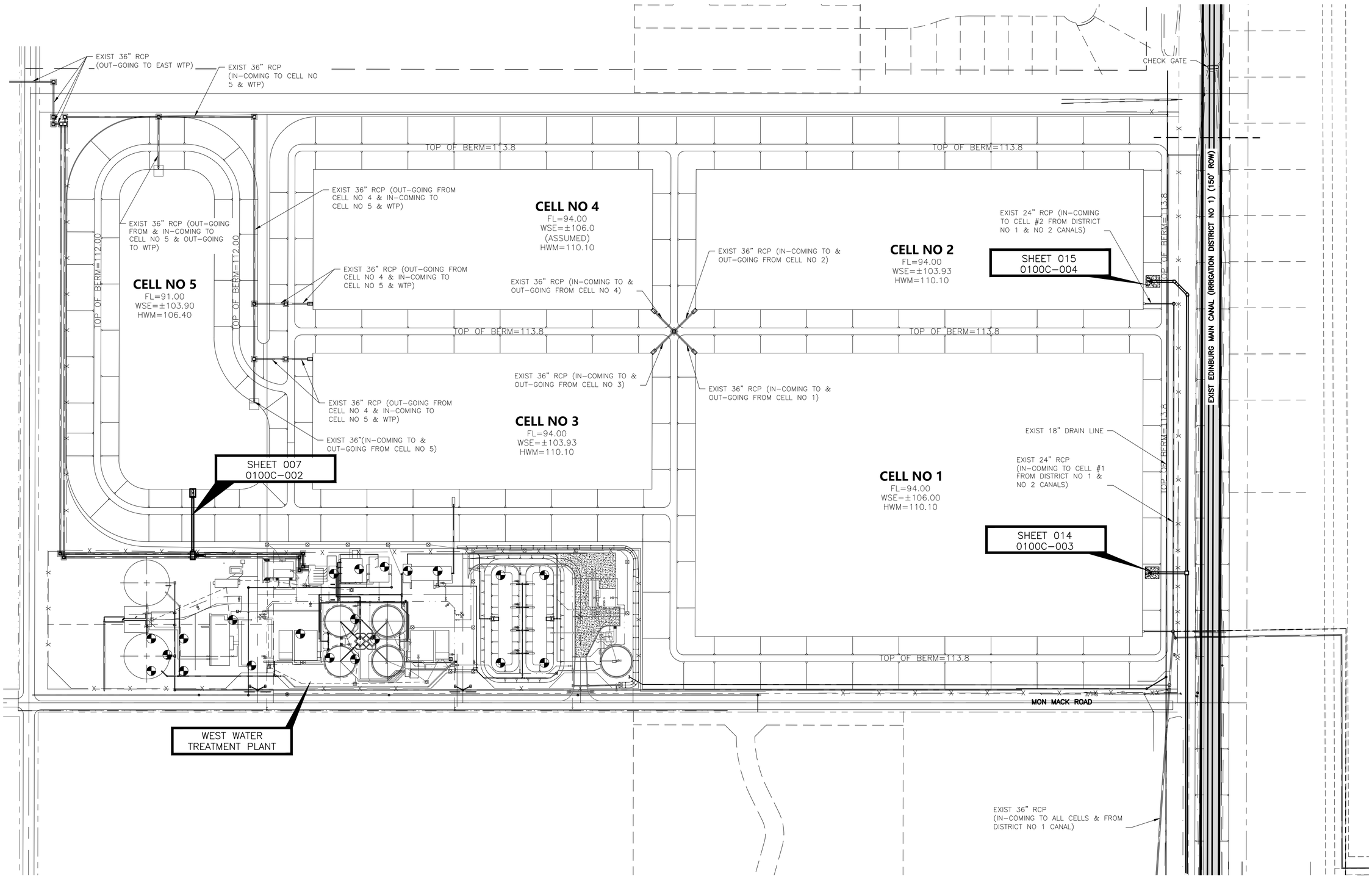

OVERALL SITE LAYOUT

SCALE: 1" = 100'

N

REVISIONS			
NO.	DATE		APP.
A	09/01/19	ISSUED FOR REVIEW	
B	06/10/20	ISSUED FOR BID	R.S.

DESIGNED BY: CAP
DRAWN BY: MRIII
CHECKED BY: JV
APPROVED BY: RS
DATE: SEPTEMBER 2019

DANNENBAUM
ENGINEERING COMPANY-McALLEN, LLC
1109 Nolana Loop, Suite 209 McAllen, TX 78504 (956) 682-3977
TBPE REGISTRATION No. F-8999

STATE OF TEXAS
RICHARD S. SOTO
REGISTERED PROFESSIONAL ENGINEER
61424
6-10-2020

CITY OF EDINBURG
WEST WATER TREATMENT PLANT
RESERVOIR IMPROVEMENTS

NEW CONSTRUCTION
KEY MAP

0 1"
SCALE BAR IS ONE INCH ON ORIGINAL DRAWINGS

PROJECT NO: 4658-02

DRAWING NO: 0100C-001

SHEET NO: 6

May 22, 2020 – 12:26pm matias.ramos3
G:\1540\4658-02 E Edinburg WTP Reservoir Imps (2019-05)\08 Const Doc Ph\08.01 IFB Dwgs\Sheet Files\006 0100C-001.dwg

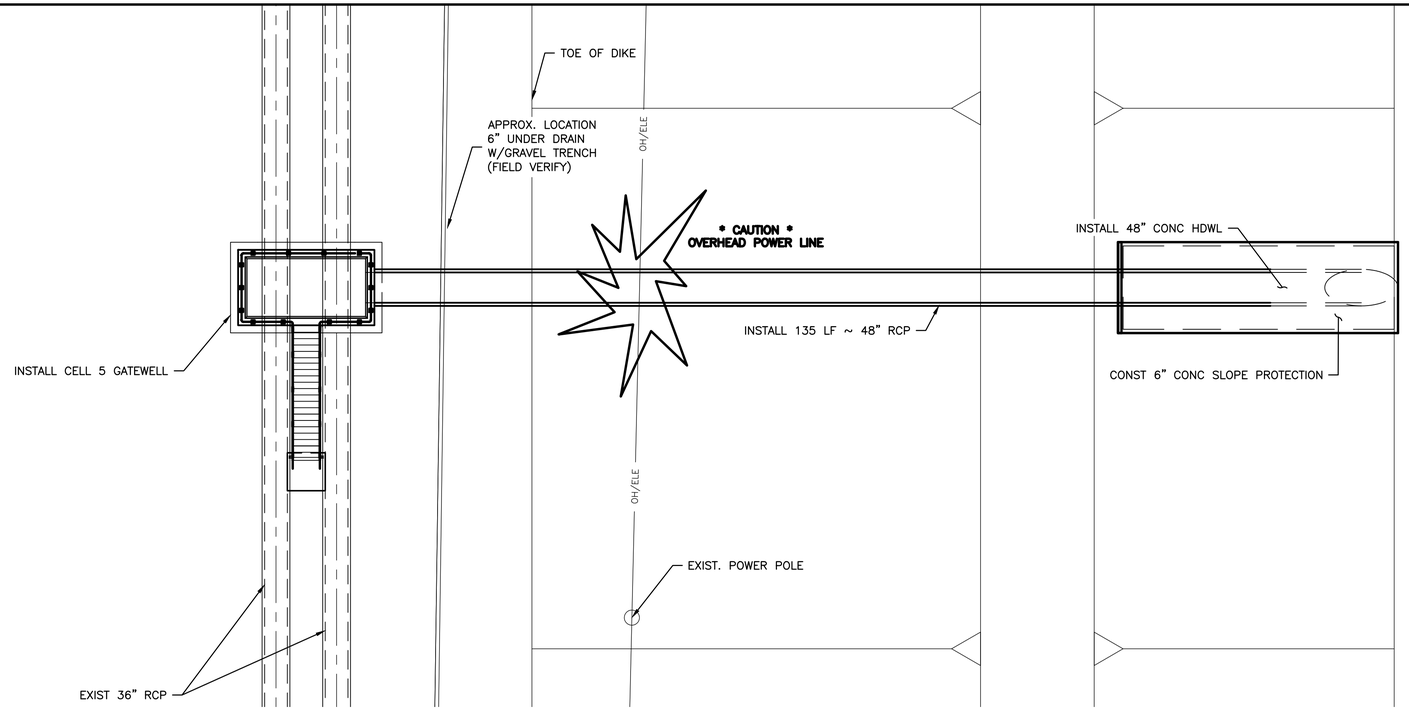

SCALE: 1" = 10'

NOTES:

1. CENTER GATEWELL ON EXISTING 36" PIPES
2. FIELD VERIFY FLOWLINE ELEVATIONS OF TWO EXISTING 36" RCP'S
3. IF ELEVATIONS OF EXISTING 36" PIPES ARE MORE THAN THREE (3) INCHES BELOW ELEVATIONS SHOWN ON THIS SHEET, STOP WORK AND NOTIFY ENGINEER BEFORE CONTINUING WORK
4. FOR GATEWELL DETAILS, SEE SHEET ENTITLED "CELL 5 GATEWELL DETAIL"
5. FOR PIPE END SECTION AND SLOPE PROTECTION, SEE SHEET ENTITLED "CELL 5 GATEWELL PIPE END SECTION AND SLOPE PROTECTION DETAIL"

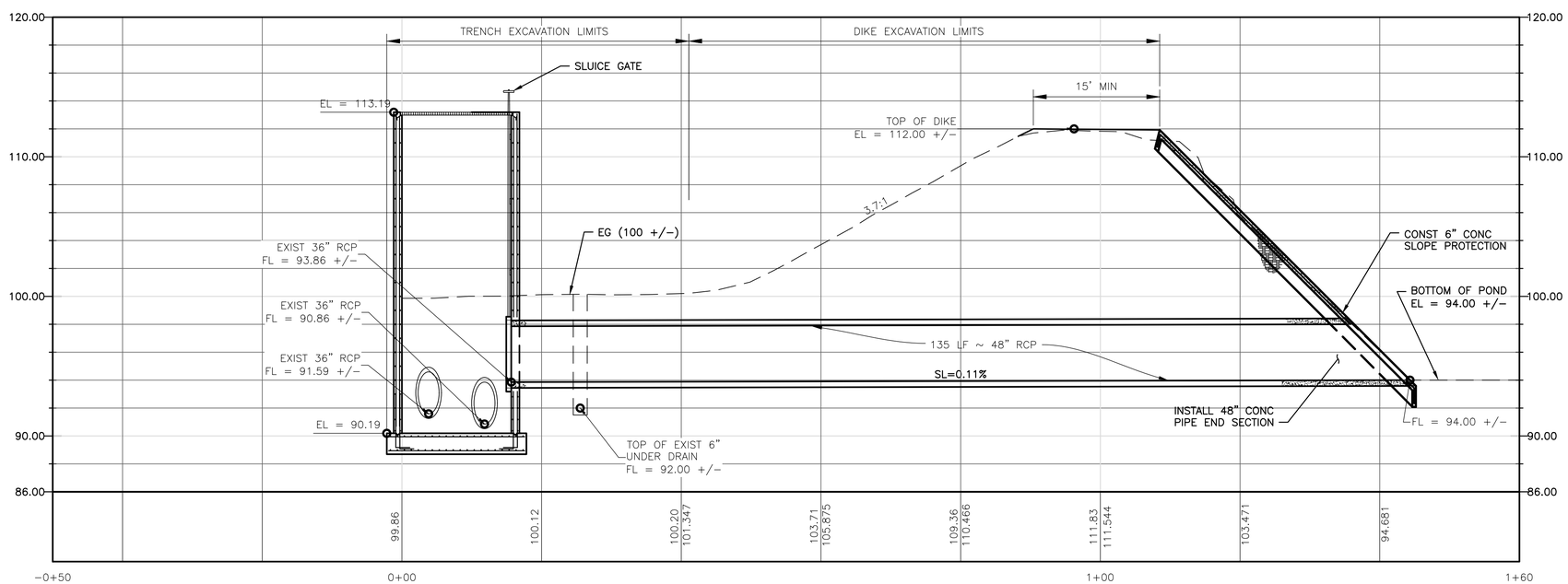

REVISIONS

NO.	DATE		APP.
A	09/01/19	ISSUED FOR REVIEW	
B	06/10/20	ISSUED FOR BID	

DESIGNED BY: CAP
DRAWN BY: MRIII
CHECKED BY: JV
APPROVED BY: RS
DATE: SEPTEMBER 2019

DANNENBAUM
ENGINEERING COMPANY-McALLEN, LLC
1109 Nolana Loop, Suite 209 McAllen, TX 78504 (956) 682-3977
TBPE REGISTRATION No. F-8999

STATE OF TEXAS
RICHARD D. SMITH
63424
REGISTERED
PROFESSIONAL ENGINEER
6-10-2020

CITY OF EDINBURG
WEST WATER TREATMENT PLANT
RESERVOIR IMPROVEMENTS

CELL 5
PROPOSED GATEWELL PIPE, AND PIPE END SECTION
PLAN AND PROFILE

0 1"
SCALE BAR IS ONE INCH ON ORIGINAL DRAWINGS

PROJECT NO:
4658-02

DRAWING NO:
0100C-002

SHEET NO:
7

May 22, 2020 – 12:27pm matias.ramos3
G:\1540\4658-02 E Edinburg WTP Reservoir Imps (2019-05)\08 Const Doc Ph\08.01 IFB Dwgs\Sheet Files\007 0100C-002.dwg

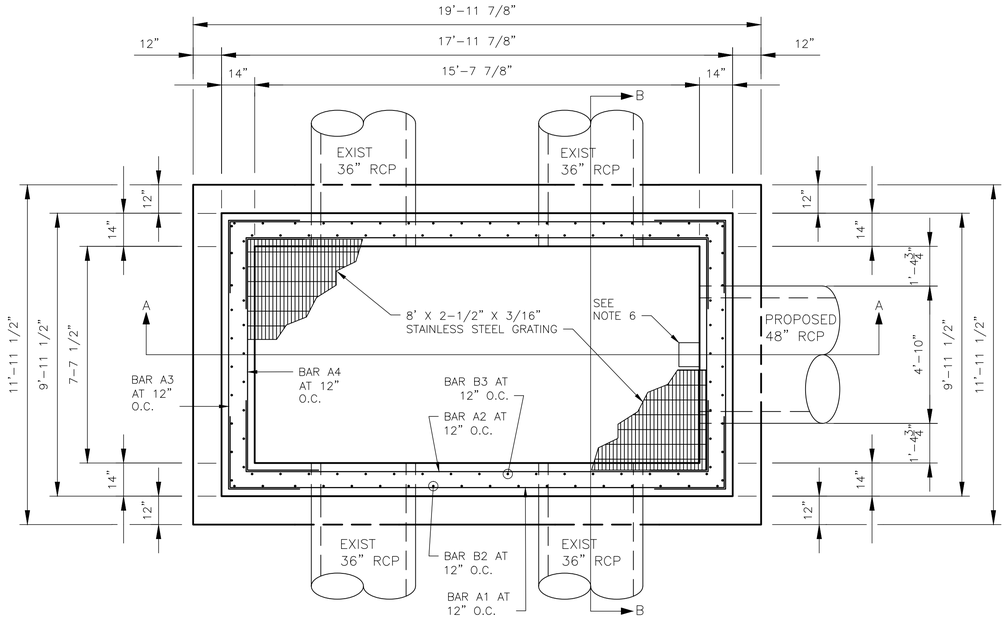

PLAN VIEW

SCALE: 3/8" = 1'-0"

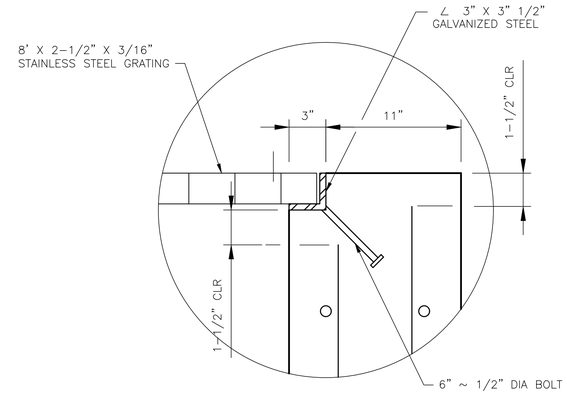

DETAIL 1

NOT TO SCALE

NOTES:

1. MINIMUM COVER FOR REINFORCED STEEL IS THREE INCHES (3") UNLESS NOTED OTHERWISE.
2. CONCRETE SHALL BE 4,000 PSI SEE SPECIFICATION 03300.
3. CEMENT SHALL BE TYPE I/II.
4. REINFORCING STEEL SHALL BE GRADE 60
5. WATER STOP SHALL BE GREENSTREAK (SWELLSTOP) WATER STOP OR EQUIVALENT.
6. PLEASE BLOCK OUT IN METAL GRATING
7. FOR SLUICE GATE DETAIL SEE SHEET ENTITLED "SLUICE GATE DETAIL"

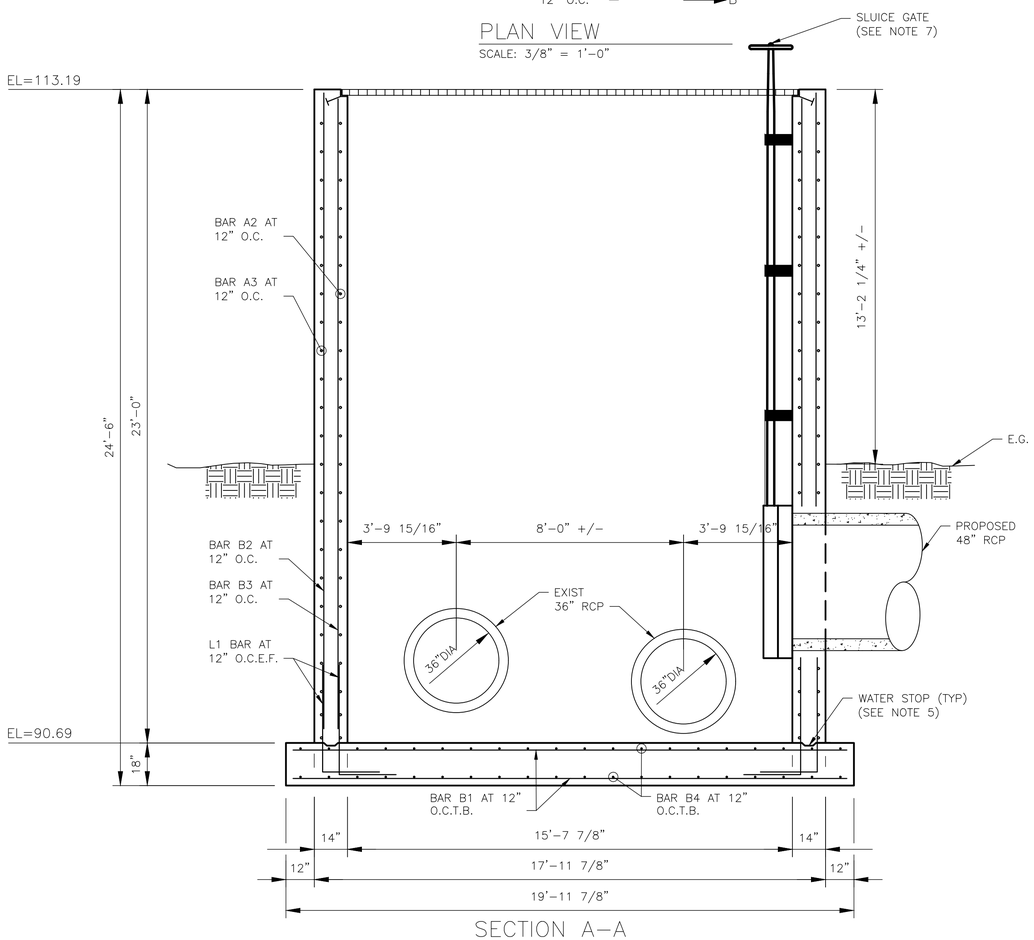

SECTION A-A

SCALE: 3/8" = 1'-0"

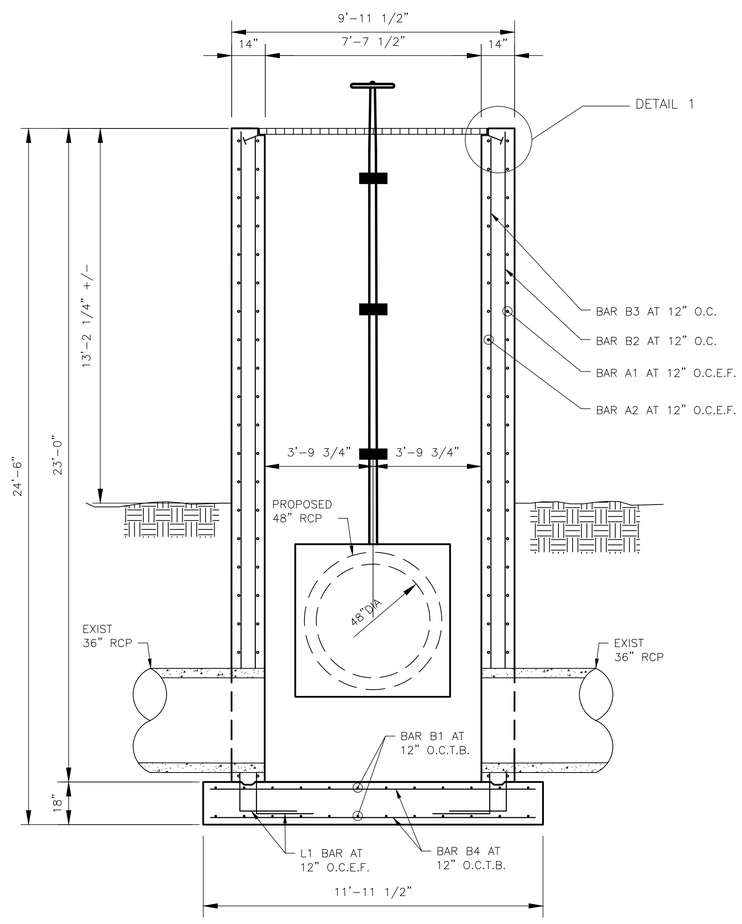

SECTION B-B

SCALE: 3/8" = 1'-0"

NO.	DATE	REVISIONS	APP.
A	09/01/19	ISSUED FOR REVIEW	
B	06/10/20	ISSUED FOR BID	

DESIGNED BY: CAP
DRAWN BY: MRIII
CHECKED BY: JV
APPROVED BY: RS
DATE: SEPTEMBER 2019

DANNENBAUM
ENGINEERING COMPANY-McALLEN, LLC
1109 Nolana Loop, Suite 209 McAllen, TX 78504 (956) 682-3977
TBPE REGISTRATION No. F-8999

STATE OF TEXAS
RONALD S. SITZ
63424
REGISTERED PROFESSIONAL ENGINEER
6-10-2020

CITY OF EDINBURG
WEST WATER TREATMENT PLANT
RESERVOIR IMPROVEMENTS

CELL 5
GATE WELL DETAILS
SHEET 1 OF 2

0 1"
SCALE BAR IS ONE INCH ON ORIGINAL DRAWINGS

PROJECT NO: 4658-02

DRAWING NO: 0100S-001

SHEET NO: 8

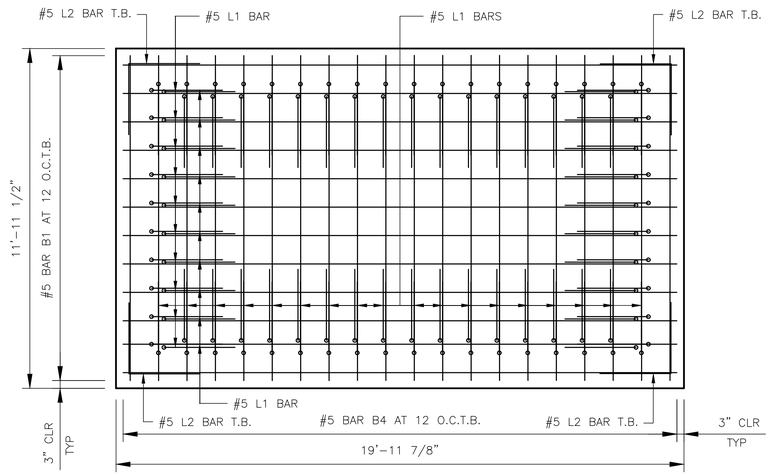

BOTTOM SLAB
SCALE: 3/8" = 1'-0"

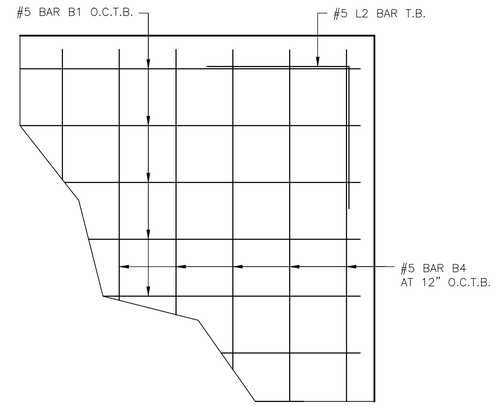

BOTTOM SLAB
(PARTIAL ENLARGED VIEW)
SCALE: 1" = 1'-0"

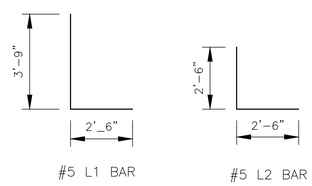

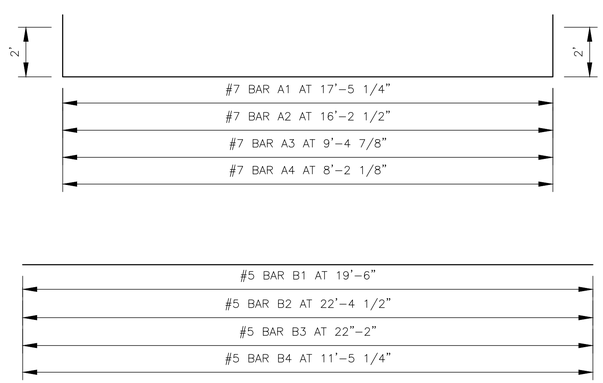

BAR DETAILS
NOT TO SCALE

REVISIONS

NO.	DATE		APP.
A	09/01/19	ISSUED FOR REVIEW	
B	06/10/20	ISSUED FOR BID	

DESIGNED BY: CAP
DRAWN BY: MRIII
CHECKED BY: JV
APPROVED BY: RS
DATE: SEPTEMBER 2019

DANNENBAUM
ENGINEERING COMPANY-McALLEN, LLC
1109 Nolana Loop, Suite 209 McAllen, TX 78504 (956) 682-3977
TBPE REGISTRATION No. F-8999

STATE OF TEXAS
RICHARD D. SMITH
63424
REGISTERED PROFESSIONAL ENGINEER
6-10-2020

CITY OF EDINBURG
WEST WATER TREATMENT PLANT
RESERVOIR IMPROVEMENTS

CELL 5
GATE WELL DETAILS
SHEET 2 OF 2

0 1"
SCALE BAR IS ONE INCH ON ORIGINAL DRAWINGS

PROJECT NO:
4658-02

DRAWING NO:
0100S-002

SHEET NO:
9

May 22, 2020 – 12:28pm matias.ramos3
G:\1540\4658-02 E Edinburg WTP Reservoir Imps (2019-05)\08 Const Doc Ph\08.01 IFB Dwgs\Sheet Files\009 0100S-002.dwg

NOTES:

1. ALL STAIRS AND APPURTENANT ITEMS SHOWN ON DRAWINGS SHALL BE ALUMINUM. ALL FASTENERS SHALL BE STAINLESS STEEL TYPE 304, 314, OR 316.
2. SHOP COAT FRAME SECTIONS AFTER WELDING ANCHOR BOLTS WITH CARBOGUARD 890. RECOAT EXPOSED STEEL WITH CARBOGUARD 890 AFTER INSTALLATION IN FIELD.

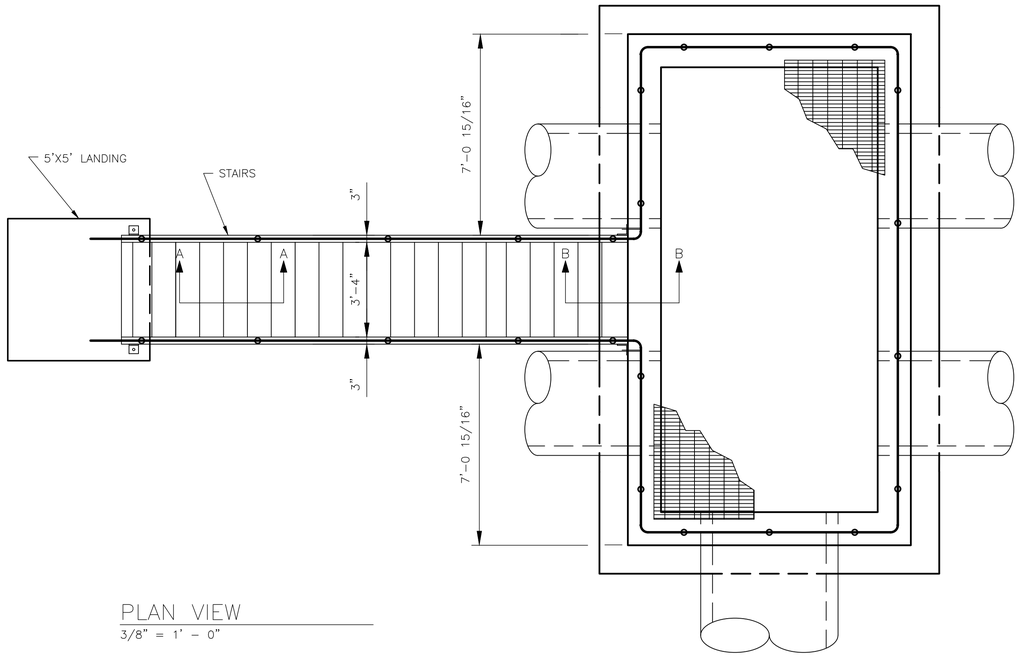

PLAN VIEW
3/8" = 1' - 0"

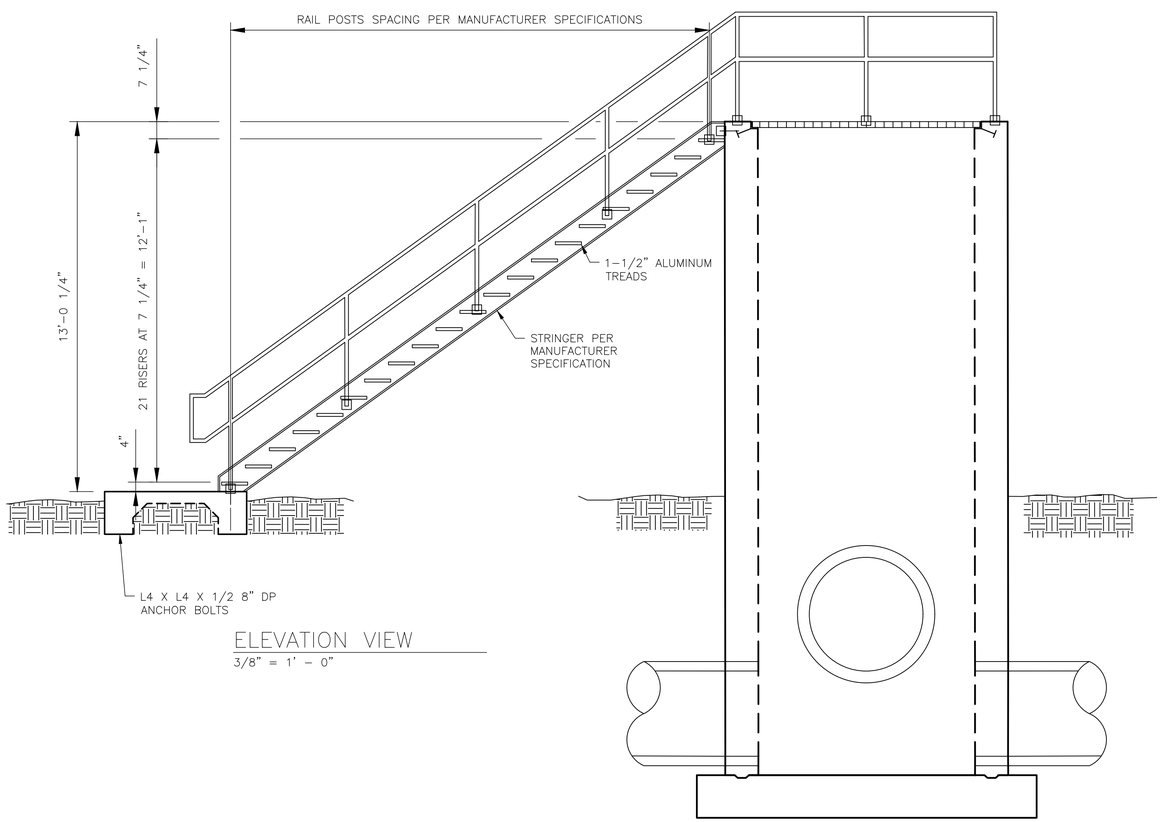

ELEVATION VIEW
3/8" = 1' - 0"

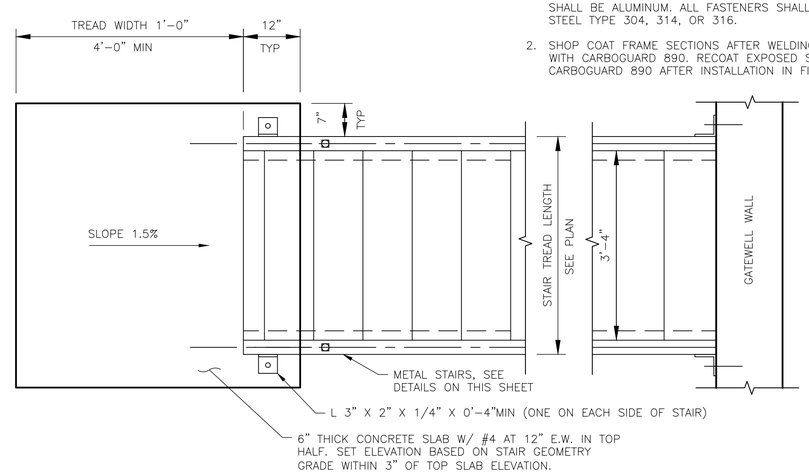

LANDING PAD FOR METAL STAIRS
NOT TO SCALE

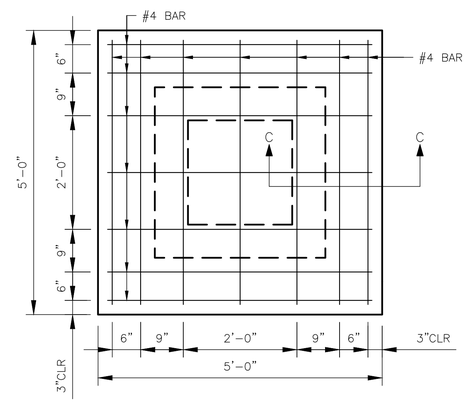

LANDING PAD
SCALE: 3/4" = 1'-0"

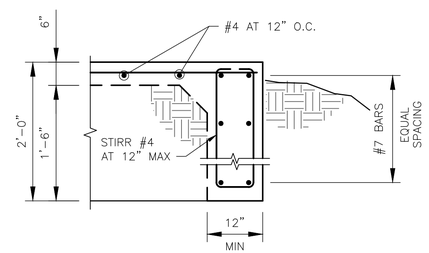

SECTION C-C
NOT TO SCALE

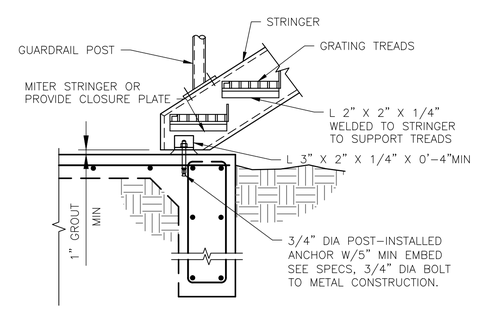

SECTION A-A
NOT TO SCALE

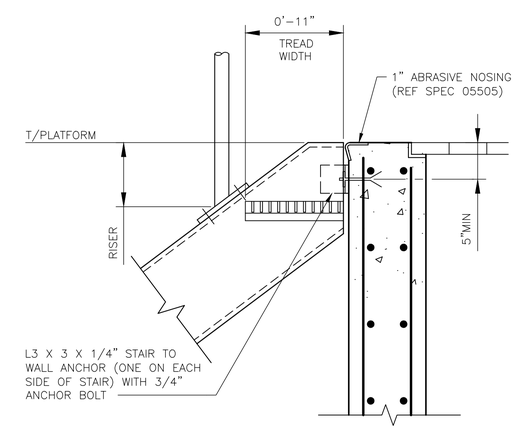

SECTION B-B
NOT TO SCALE

STAIR TOP AND BOTTOM CONNECTIONS
NOT TO SCALE

REVISIONS

NO.	DATE		APP.
A	09/01/19	ISSUED FOR REVIEW	
B	06/10/20	ISSUED FOR BID	

DESIGNED BY: CAP
DRAWN BY: MRIII
CHECKED BY: JV
APPROVED BY: RS
DATE: SEPTEMBER 2019

DANNENBAUM
ENGINEERING COMPANY-McALLEN, LLC
1109 Nolana Loop, Suite 209 McAllen, TX 78504 (956) 682-3977
TBPE REGISTRATION No. F-8999

STATE OF TEXAS
RICHARD J. SOTO
63429
REGISTERED PROFESSIONAL ENGINEER
6-10-2020

CITY OF EDINBURG
WEST WATER TREATMENT PLANT
RESERVOIR IMPROVEMENTS

CELL 5
GATE WELL STAIR DETAILS
(SHEET 1 OF 1)

0 1"
SCALE BAR IS ONE INCH ON ORIGINAL DRAWINGS

PROJECT NO:
4658-02

DRAWING NO:
0100S-003

SHEET NO:
10

May 22, 2020 - 12:28pm matias.ramos3
G:\1540\4658-02 E Edinburg WTP Reservoir Imps (2019-05)\08 Const Doc Ph\08.01 IFB Dwgs\Sheet Files\010 0100S-003.dwg

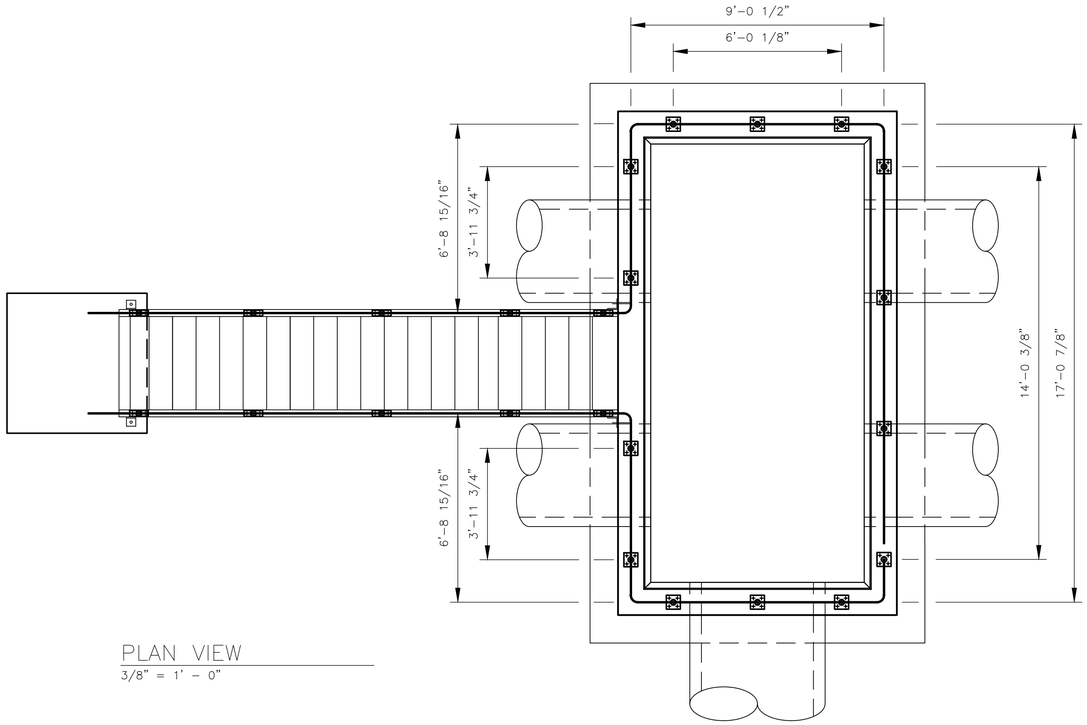

PLAN VIEW
3/8" = 1' - 0"

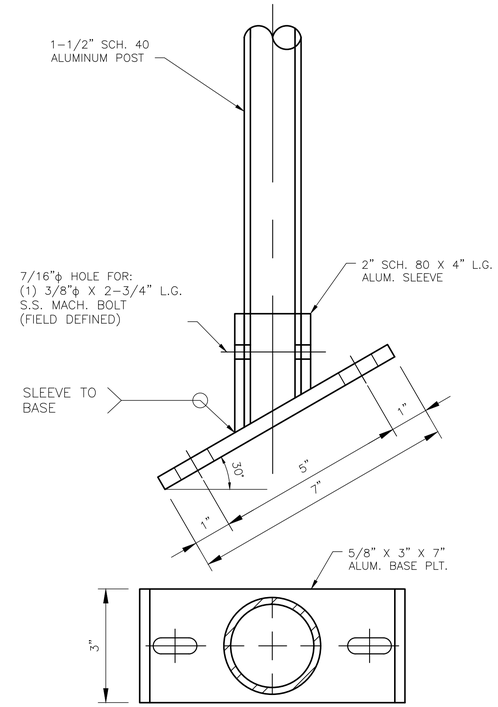

BASE PLATE FOR MOUNTING
TO METAL STRINGER
NOT TO SCALE

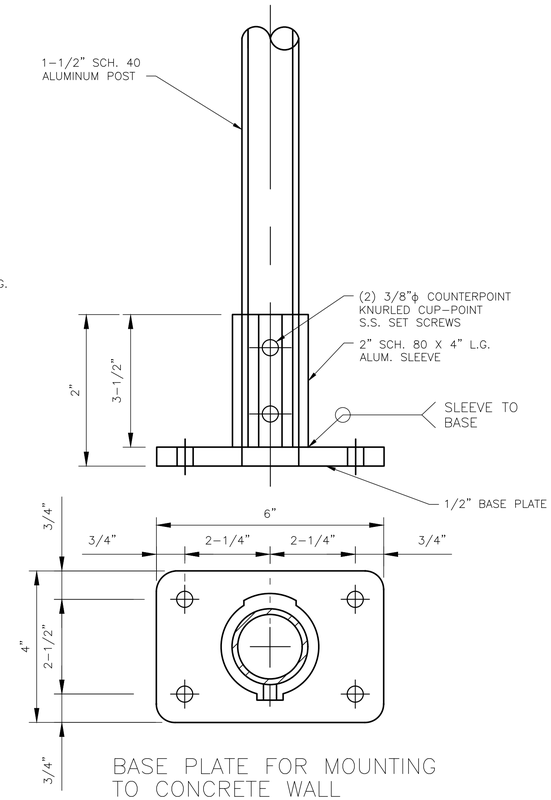

BASE PLATE FOR MOUNTING
TO CONCRETE WALL
NOT TO SCALE

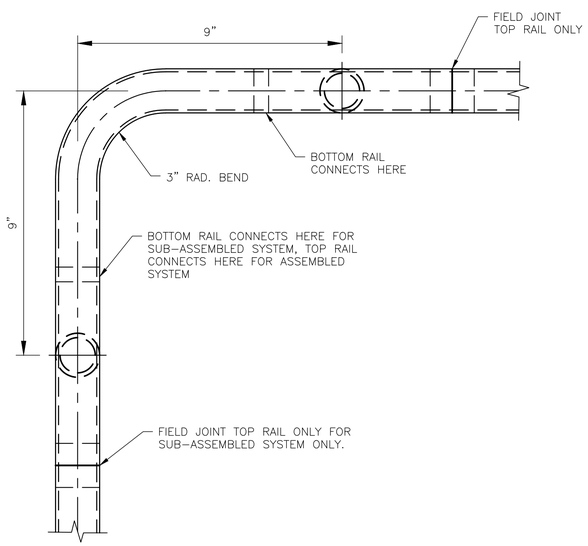

TYPICAL CORNER DETAIL
NOT TO SCALE

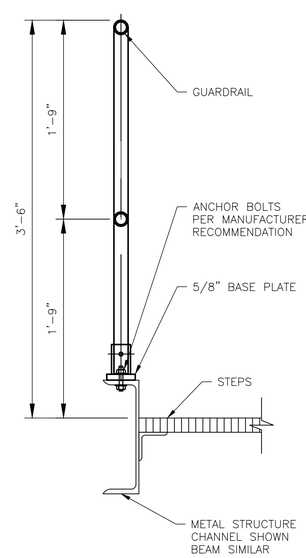

CHANNEL MOUNTING DETAIL
1 - 1/2" = 1' - 0"

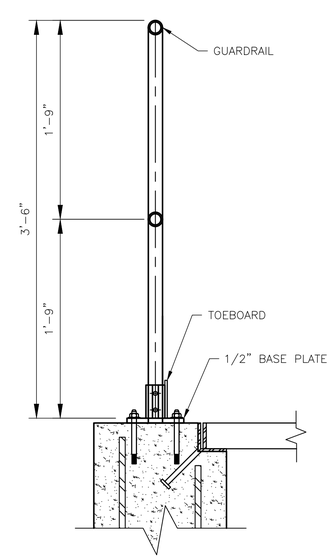

WALL MOUNTING DETAIL
1 - 1/2" = 1' - 0"

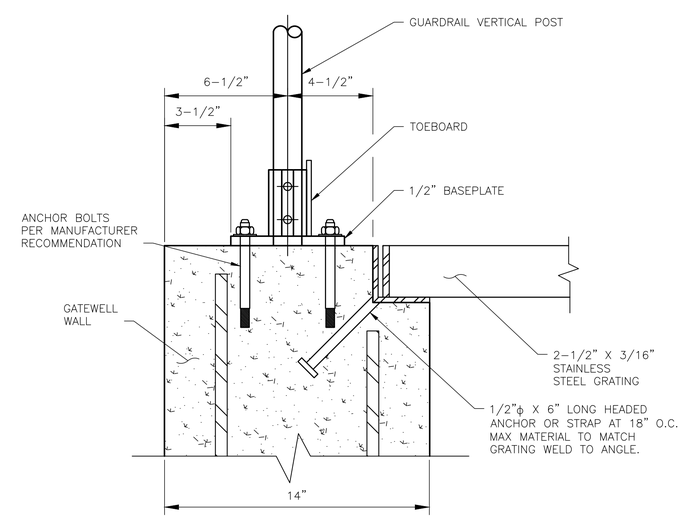

WALL MOUNTING DETAIL
(ENLARGED VIEW)
3" = 1' - 0"

REVISIONS

NO.	DATE		APP.
A	09/01/19	ISSUED FOR REVIEW	
B	06/10/20	ISSUED FOR BID	

DESIGNED BY: CAP
DRAWN BY: MRIII
CHECKED BY: JV
APPROVED BY: RS
DATE: SEPTEMBER 2019

DANNENBAUM
ENGINEERING COMPANY-McALLEN, LLC
1109 Nolana Loop, Suite 209 McAllen, TX 78504 (956) 682-3977
TBPE REGISTRATION No. F-8999

STATE OF TEXAS
RICHARD S. SOTO
C5424
REGISTERED PROFESSIONAL ENGINEER
6-10-2020

CITY OF EDINBURG
WEST WATER TREATMENT PLANT
RESERVOIR IMPROVEMENTS

CELL 5
GATEWELL RAILING DETAILS
(SHEET 1 OF 1)

0 1"
SCALE BAR IS ONE INCH
ON ORIGINAL DRAWINGS

PROJECT NO:
4658-02

DRAWING NO:
0100S-004

SHEET NO:
11

May 22, 2020 - 12:28pm matias.ramos3
G:\1540\4658-02 E Edinburg WTP Reservoir Imps (2019-05)\08 Const Doc Ph\08.01 IFB Dwgs\Sheet Files\011 0100S-004.dwg

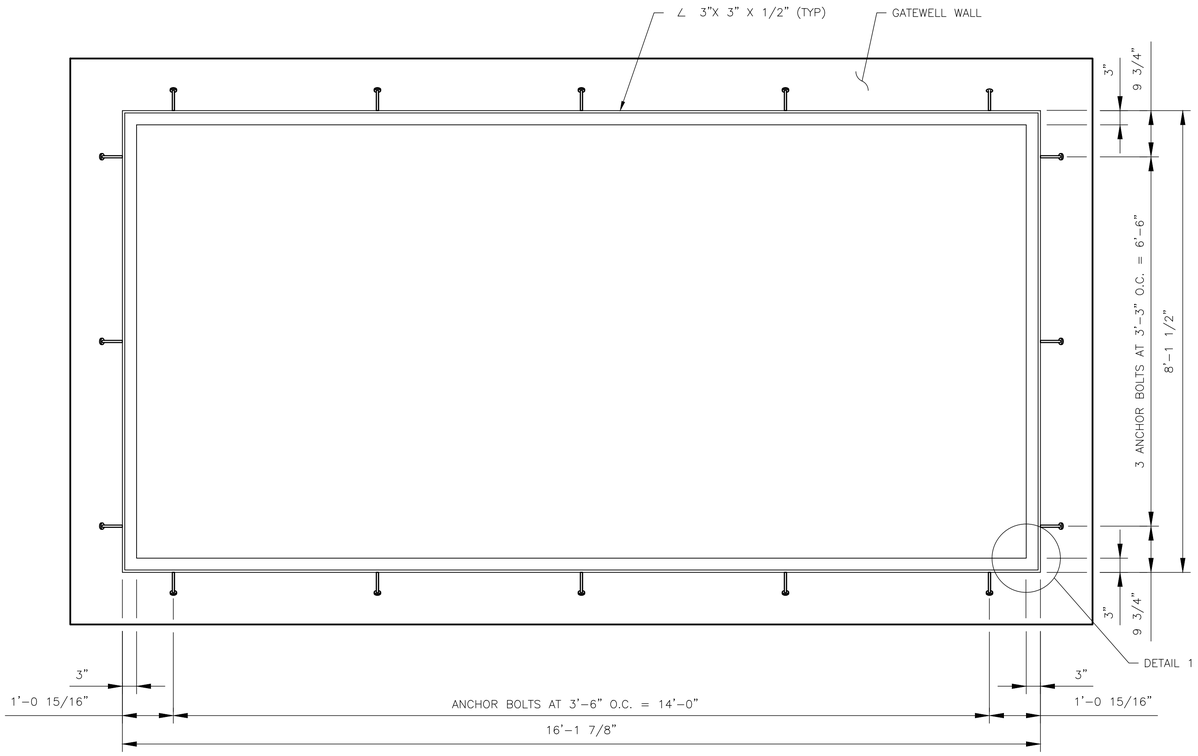

PLAN VIEW
3/4" - 1'-0"

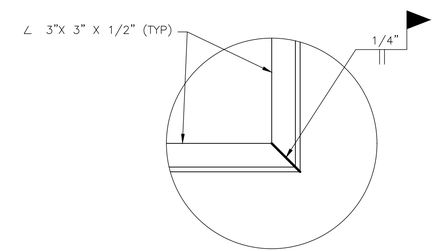

DETAIL 1
NOT TO SCALE

NOTES:

1. GRATING SIZE PER CONTRACT DOCUMENTS.
2. ALL ENDS AND OPENINGS SHALL BE BANDED.
3. ATTACH GRATING TO ALL SUPPORT ANGLES PER MANUFACTURERS RECOMMENDATION.
4. PROVIDE DISSIMILAR MATERIAL PROTECTION FOR METAL IN CONTACT WITH CONCRETE. PER SPECIFICATION 09905.
5. SHOP COAT FRAME SECTIONS AFTER WELDING ANCHOR BOLTS WITH CARBOGUARD 890. RECOAT EXPOSED STEEL WITH CARBOGUARD 890 AFTER INSTALLATION IN FIELD.

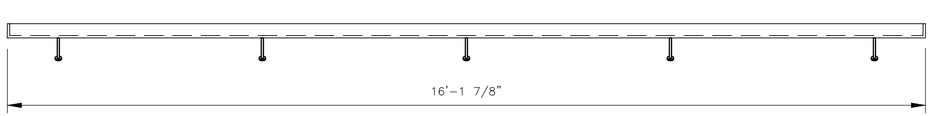

ELEVATION VIEW
3/4" - 1'-0"

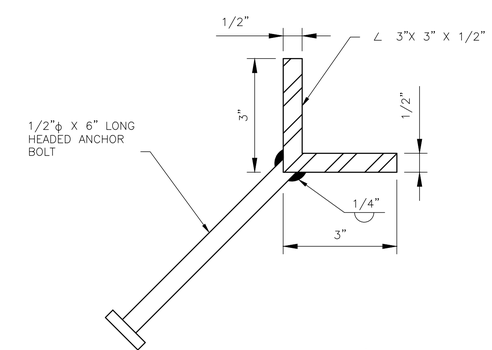

ANGLE IRON W/ ANCHOR BOLT
NOT TO SCALE

REVISIONS

NO.	DATE		APP.
A	09/01/19	ISSUED FOR REVIEW	
B	06/10/20	ISSUED FOR BID	

DESIGNED BY: CAP
DRAWN BY: MRIII
CHECKED BY: JV
APPROVED BY: RS
DATE: SEPTEMBER 2019

DANNENBAUM
ENGINEERING COMPANY-McALLEN, LLC
1109 Nolana Loop, Suite 209 McAllen, TX 78504 (956) 682-3977
TBPE REGISTRATION No. F-8999

STATE OF TEXAS
RICHARD L. SMITH
63424
LICENSED
PROFESSIONAL ENGINEER
6-10-2020

CITY OF EDINBURG
WEST WATER TREATMENT PLANT
RESERVOIR IMPROVEMENTS

CELL 5
GATEWELL GRATE REPAIR DETAILS
(SHEET 1 OF 1)

0 1"
SCALE BAR IS ONE INCH ON ORIGINAL DRAWINGS

PROJECT NO:
4658-02

DRAWING NO:
0100S-005

SHEET NO:
12

May 22, 2020 - 12:28pm matias.ramos3
G:\1540\4658-02 E Edinburg WTP Reservoir Imps (2019-05)\08 Const Doc Ph\08.01 IFB Dwgs\Sheet Files\012 0100S-005.dwg

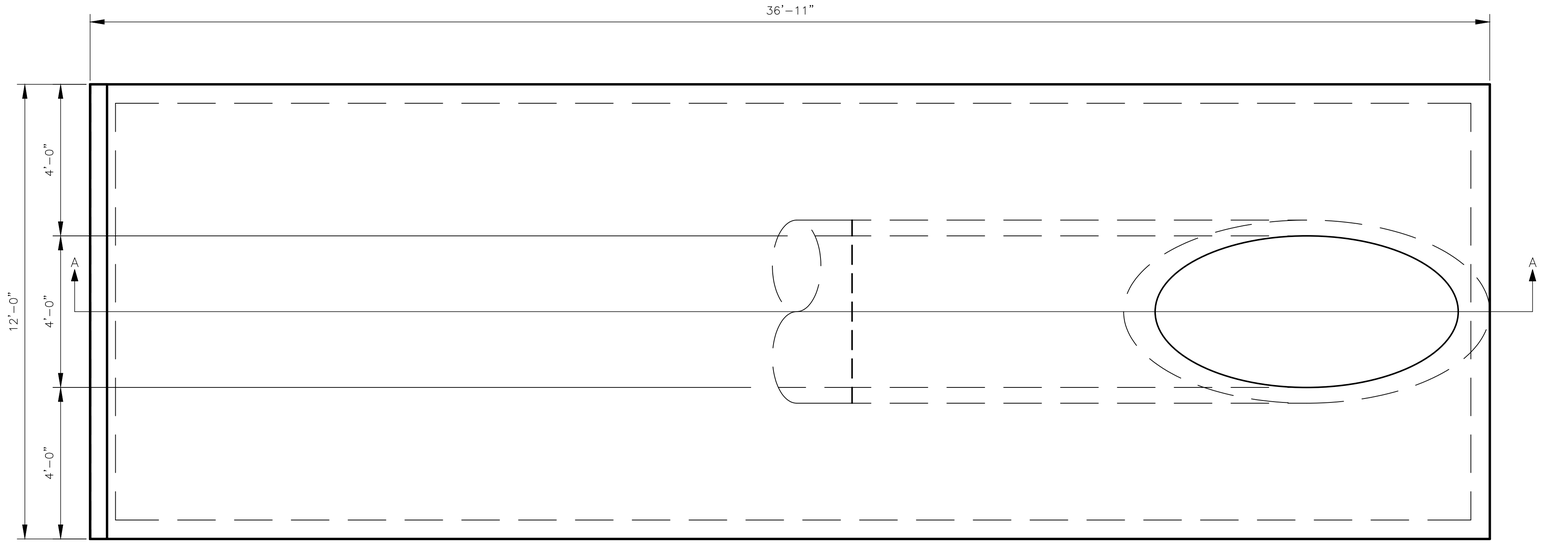

PLAN VIEW

1/2" = 1' - 0"

NOTES:

1. CONCRETE TO HAVE 3000 P.S.I. MIN. AT 28 DAY COMPRESSIVE STRENGTH.
2. ALL STEEL TO BE GRADE 60.
3. MIN. 90% COMPACTION STD. PROCTOR DENSITY
4. REINFORCING STEEL SHALL BE 6 X 6 #6 WIRE MESH

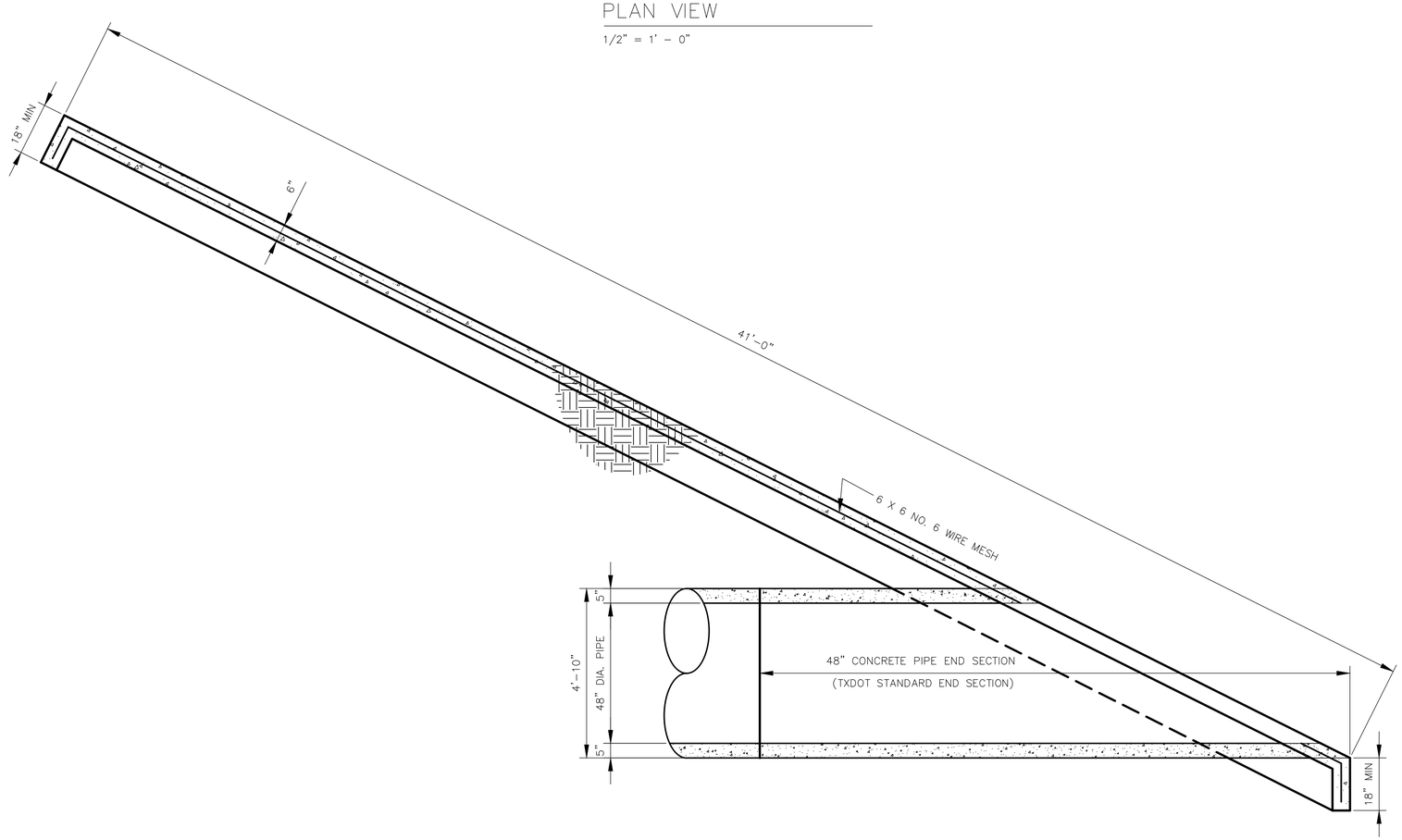

SECTION A-A

1/2" = 1' - 0"

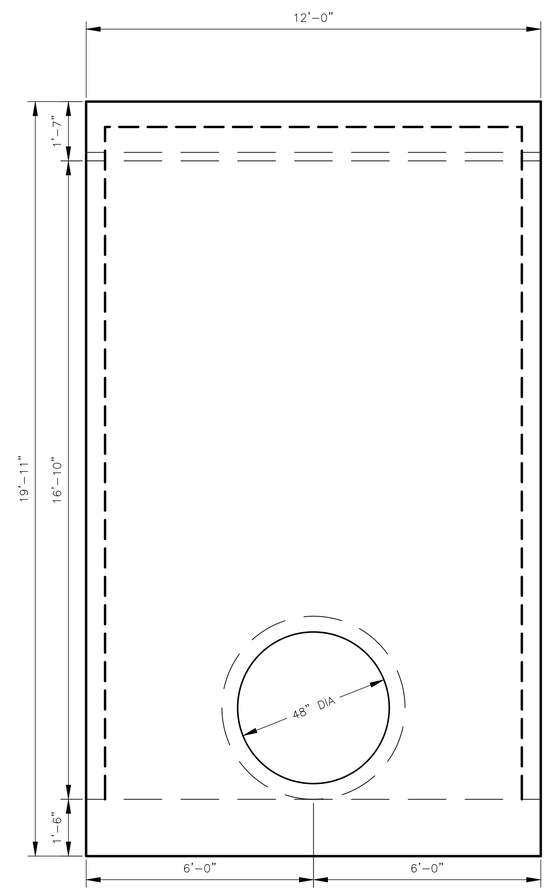

PROFILE VIEW

1/2" = 1' - 0"

REVISIONS

NO.	DATE		APP.
A	09/01/19	ISSUED FOR REVIEW	
B	06/10/20	ISSUED FOR BID	

DESIGNED BY: CAP
DRAWN BY: MRIII
CHECKED BY: JV
APPROVED BY: RS
DATE: SEPTEMBER 2019

DANNENBAUM
ENGINEERING COMPANY-McALLEN, LLC
1109 Nolana Loop, Suite 209 McAllen, TX 78504 (956) 682-3977
TBPE REGISTRATION No. F-8999

STATE OF TEXAS
RICHARD L. SOTO
REGISTERED PROFESSIONAL ENGINEER
61424
6-10-2020

CITY OF EDINBURG
WEST WATER TREATMENT PLANT
RESERVOIR IMPROVEMENTS

CELL 5
PIPE END SECTION & SLOPE PROTECTION DETAIL
(SHEET 1 OF 1)

0 1"
SCALE BAR IS ONE INCH ON ORIGINAL DRAWINGS

PROJECT NO: 4658-02

DRAWING NO: 0100S-006

SHEET NO: 13

May 22, 2020 - 12:28pm matias.ramos3
G:\1540\4658-02 E Edinburg WTP Reservoir Imps (2019-05)\08 Const Doc Ph\08.01 IFB Dwgs\Sheet Files\013 0100S-006.dwg

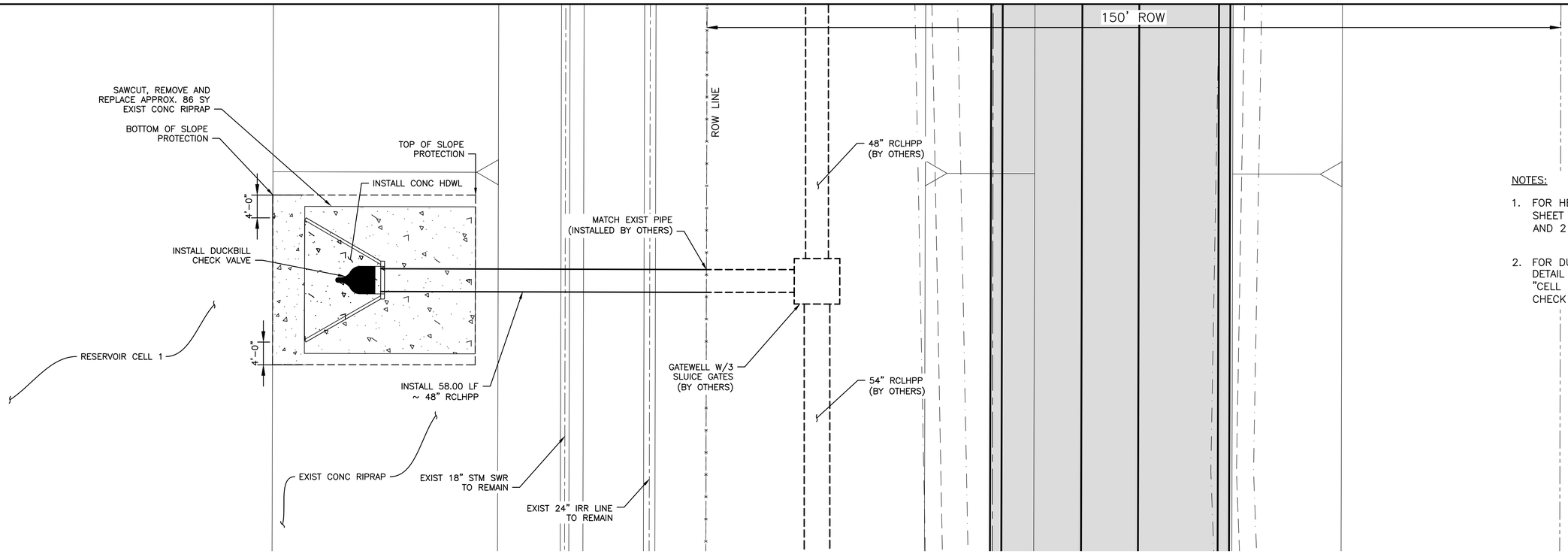

NOTES:

1. FOR HEADWALL DETAILS SEE SHEET ENTITLED "CELL 1 AND 2 HEADWALL DETAIL"
2. FOR DUCKBILL CHECK VALVE DETAIL SEE SHEET ENTITLED "CELL 1 AND 2 DUCKBILL CHECK VALVE DETAIL"

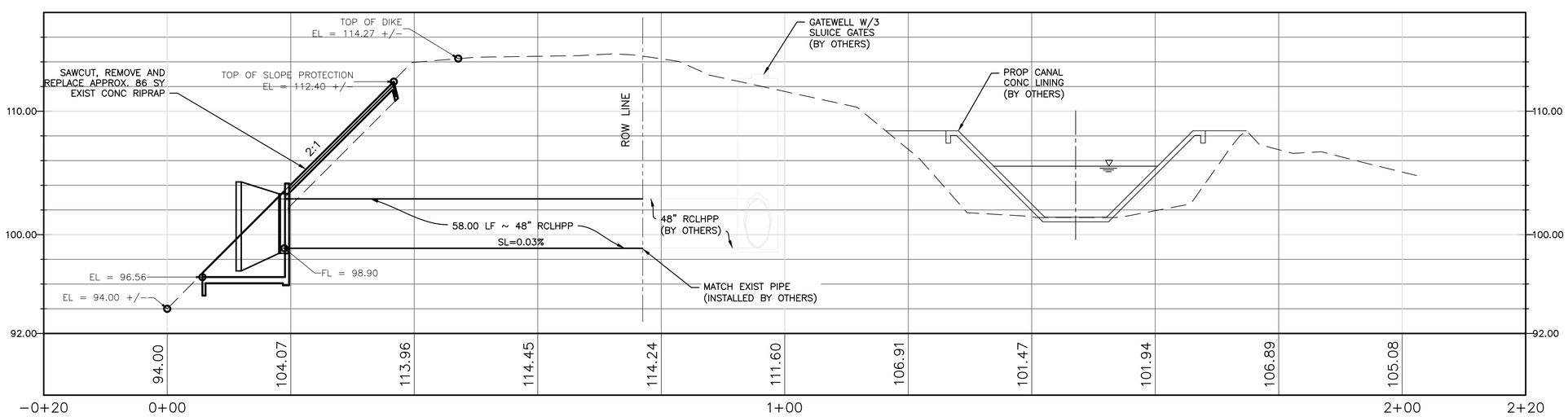

REVISIONS

NO.	DATE		APP.
A	09/01/19	ISSUED FOR REVIEW	
B	06/10/20	ISSUED FOR BID	

DESIGNED BY: CAP
DRAWN BY: MRIII
CHECKED BY: JV
APPROVED BY: RS
DATE: SEPTEMBER 2019

DANNENBAUM
ENGINEERING COMPANY-McALLEN, LLC
1109 Nolana Loop, Suite 209 McAllen, TX 78504 (956) 682-3977
TBPE REGISTRATION No. F-8999

STATE OF TEXAS
RICHARD S. SOTO
REGISTERED PROFESSIONAL ENGINEER
61424

CITY OF EDINBURG
WEST WATER TREATMENT PLANT
RESERVOIR IMPROVEMENTS

CELL 1
PROPOSED PIPE AND HEADWALL
PLAN AND PROFILE

0 1"
SCALE BAR IS ONE INCH ON ORIGINAL DRAWINGS

PROJECT NO:
4658-02

DRAWING NO:
0100C-003

SHEET NO:
14

May 22, 2020 – 12:29pm matias.ramos3
G:\1540\4658-02 E Edinburg WTP Reservoir Imps (2019-05)\08 Const Doc Ph\08.01 IFB Dwgs\Sheet Files\014 0100C-003.dwg

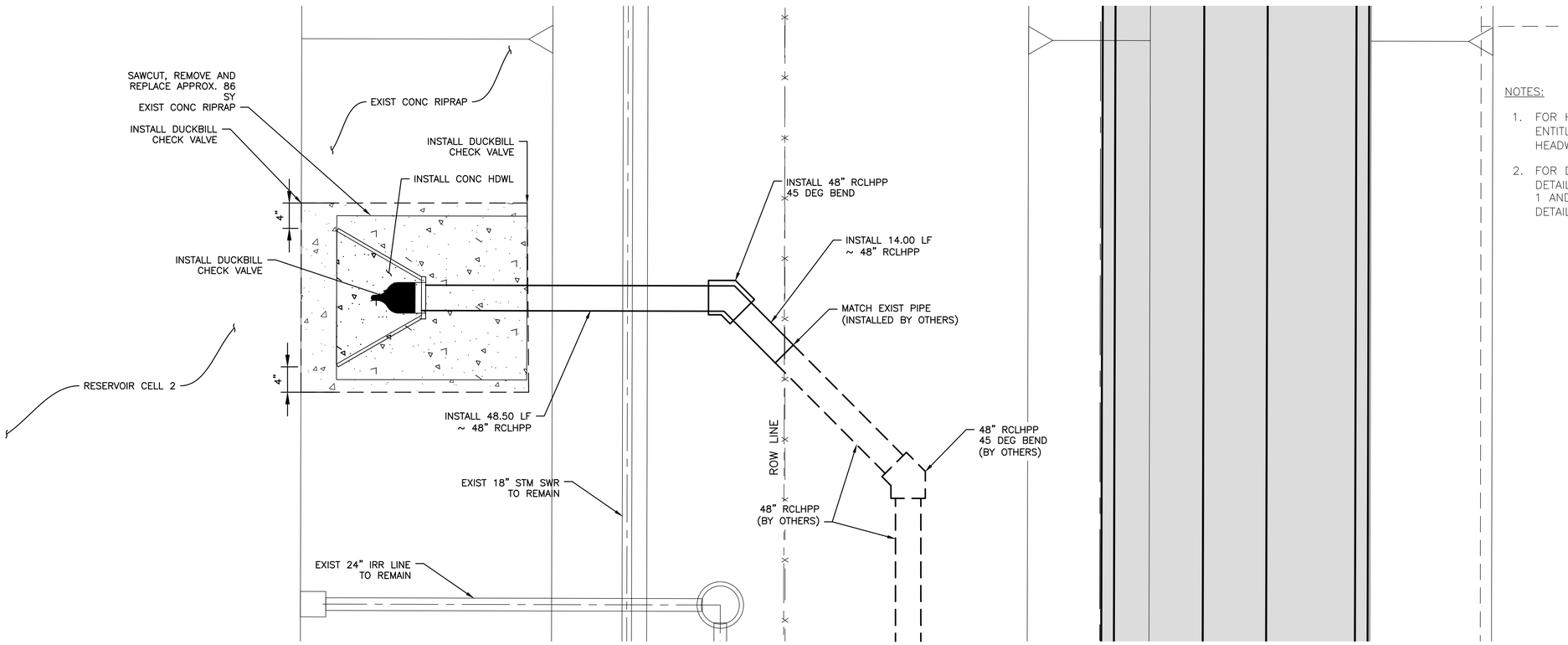

NOTES:

1. FOR HEADWALL DETAILS SEE SHEET ENTITLED "CELL 1 AND 2 HEADWALL DETAIL"
2. FOR DUCKBILL CHECK VALVE DETAIL SEE SHEET ENTITLED "CELL 1 AND 2 DUCKBILL CHECK VALVE DETAIL"

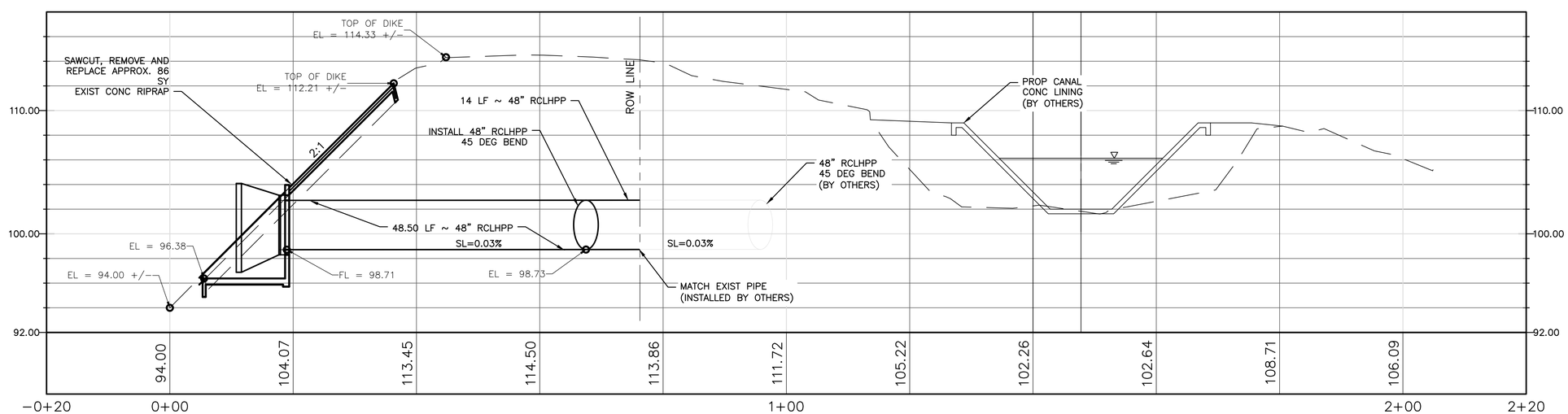

REVISIONS

NO.	DATE		APP.
A	09/01/19	ISSUED FOR REVIEW	
B	06/10/20	ISSUED FOR BID	

DESIGNED BY: CAP
DRAWN BY: MRIII
CHECKED BY: JV
APPROVED BY: RS
DATE: SEPTEMBER 2019

DANNENBAUM
ENGINEERING COMPANY-McALLEN, LLC
1109 Nolana Loop, Suite 209 McAllen, TX 78504 (956) 682-3977
TBPE REGISTRATION No. F-8999

STATE OF TEXAS
ROBERT L. SITZ
63424
REGISTERED PROFESSIONAL ENGINEER
Robert L. Sitz P.E.
6-10-2020

CITY OF EDINBURG
WEST WATER TREATMENT PLANT
RESERVOIR IMPROVEMENTS

CELL 2
PROPOSED PIPE AND HEADWALL
PLAN AND PROFILE

0 1"
SCALE BAR IS ONE INCH ON ORIGINAL DRAWINGS

PROJECT NO:
4658-02

DRAWING NO:
0100C-004

SHEET NO:
15

May 22, 2020 – 12:30pm matias.ramos3
G:\1540\4658-02 E Edinburg WTP Reservoir Imps (2019-05)\08 Const Doc Ph\08.01 IFB Dwgs\Sheet Files\015 0100C-004.dwg

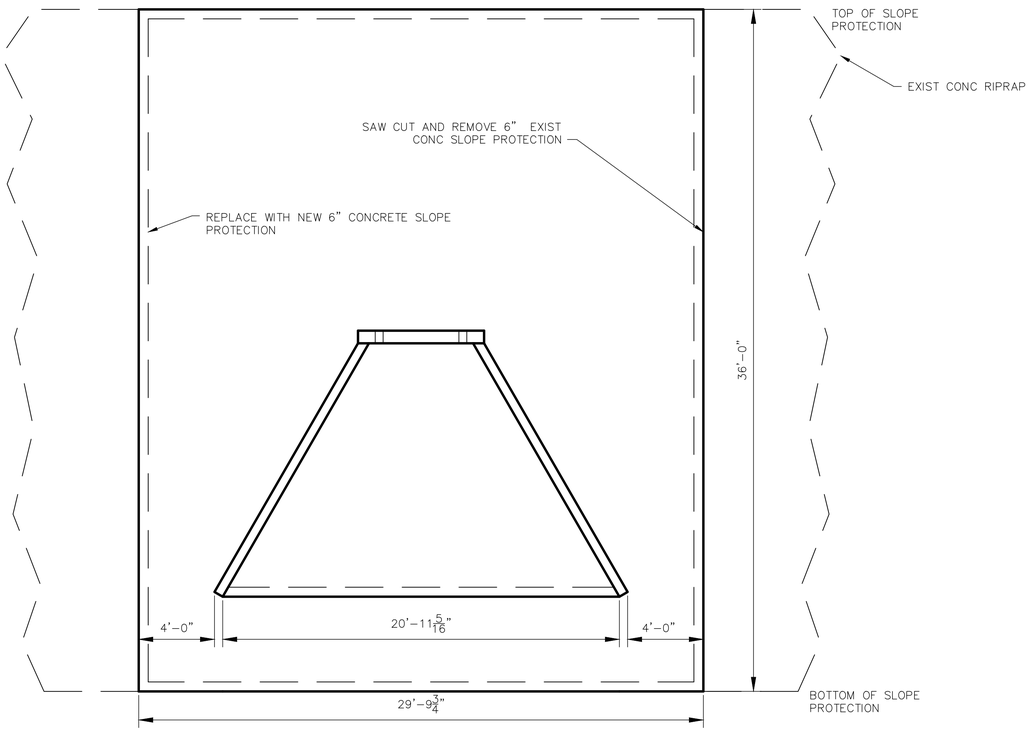

PLAN VIEW

1/4" = 1' - 0"

NOTES:

1. CONCRETE TO HAVE 3000 P.S.I. SHALL BE MINIMUM.
2. ALL STEEL TO BE GRADE 60.
3. MIN. 90% COMPACTION STD. PROCTOR DENSITY.
4. REINFORCING STEEL SHALL BE 6 X 6 #6 WIRE MESH.
5. LINE ALL JOINTS WITH HYDROPHILIC WATER STOP.
6. SEE SHEET 19 0100S-008 FOR HEADWALL DETAILS.
7. CONTRACTOR IS TO PROVIDE EXCAVATION/BACKFILL DIAGRAM FOR ENGINEERS REVIEW PRIOR TO BEGINNING CONSTRUCTION.

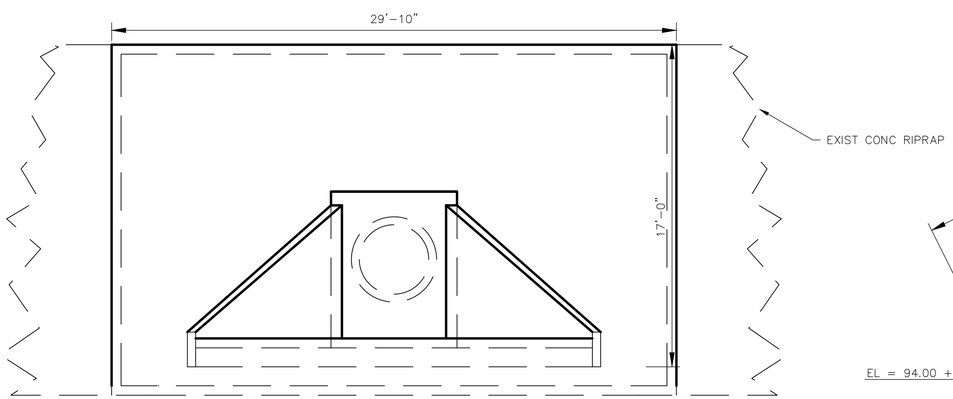

SECTION A-A

1/4" = 1' - 0"

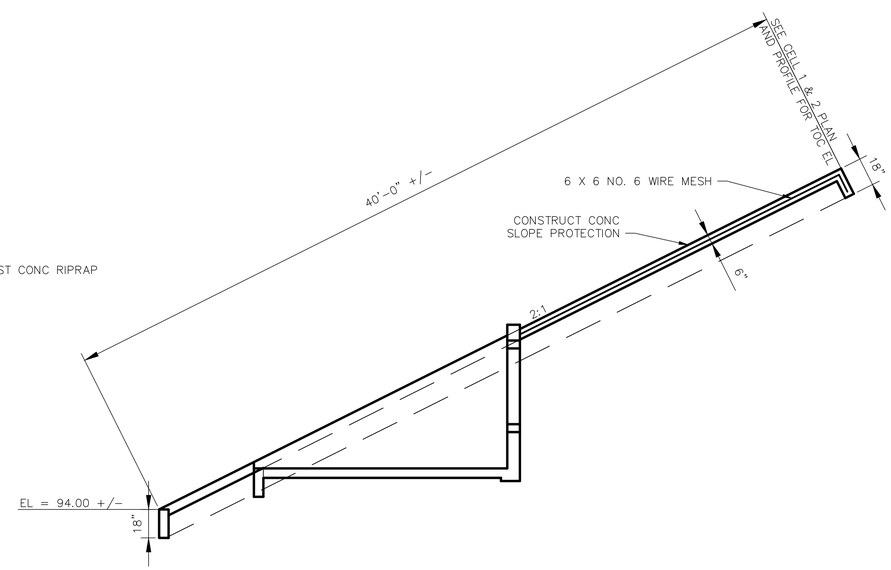

PROFILE VIEW

1/4" = 1' - 0"

REVISIONS

NO.	DATE		APP.
A	09/01/19	ISSUED FOR REVIEW	
B	06/10/20	ISSUED FOR BID	

DESIGNED BY: CAP
DRAWN BY: MRIII
CHECKED BY: JV
APPROVED BY: RS
DATE: SEPTEMBER 2019

DANNENBAUM
ENGINEERING COMPANY-McALLEN, LLC
1109 Nolana Loop, Suite 209 McAllen, TX 78504 (956) 682-3977
TBPE REGISTRATION No. F-8999

STATE OF TEXAS
RICHARD A. SMITH
63424
REGISTERED PROFESSIONAL ENGINEER
6-12-2020

CITY OF EDINBURG
WEST WATER TREATMENT PLANT
RESERVOIR IMPROVEMENTS

CELL 1 & 2
SLOPE PROTECTION DETAIL
(SHEET 1 OF 1)

0 1"
SCALE BAR IS ONE INCH ON ORIGINAL DRAWINGS

PROJECT NO: 4658-02

DRAWING NO: 0100S-007

SHEET NO: 16

May 22, 2020 - 12:31pm matias.ramos3
G:\1540\4658-02 E Edinburg WTP Reservoir Imps (2019-05)\08 Const Doc Ph\08.01 IFB Dwgs\Sheet Files\016 0100S-007.dwg

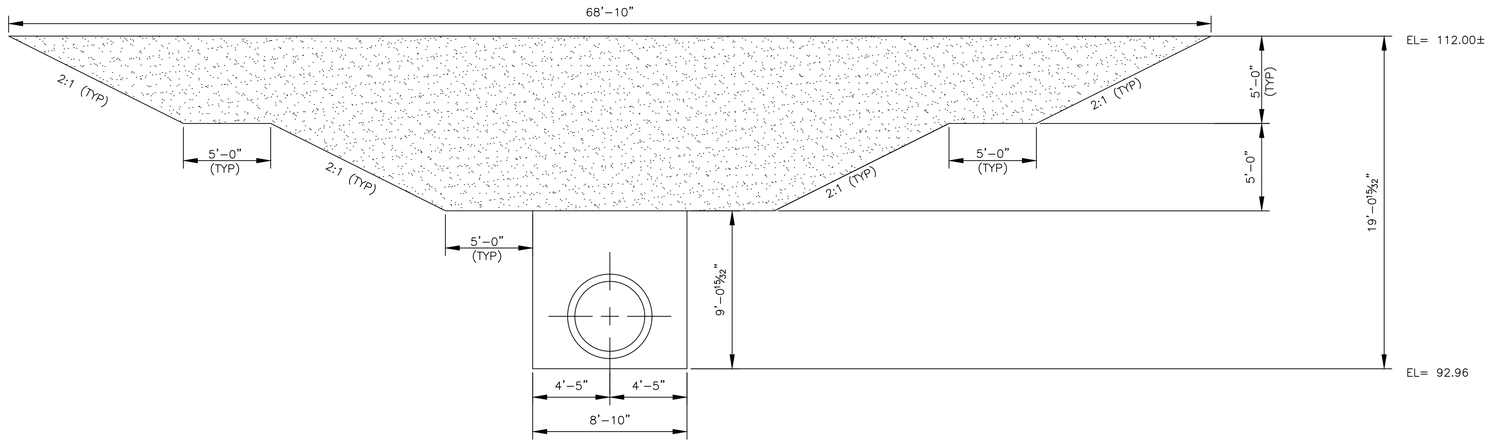

CELL 5 GATEWELL

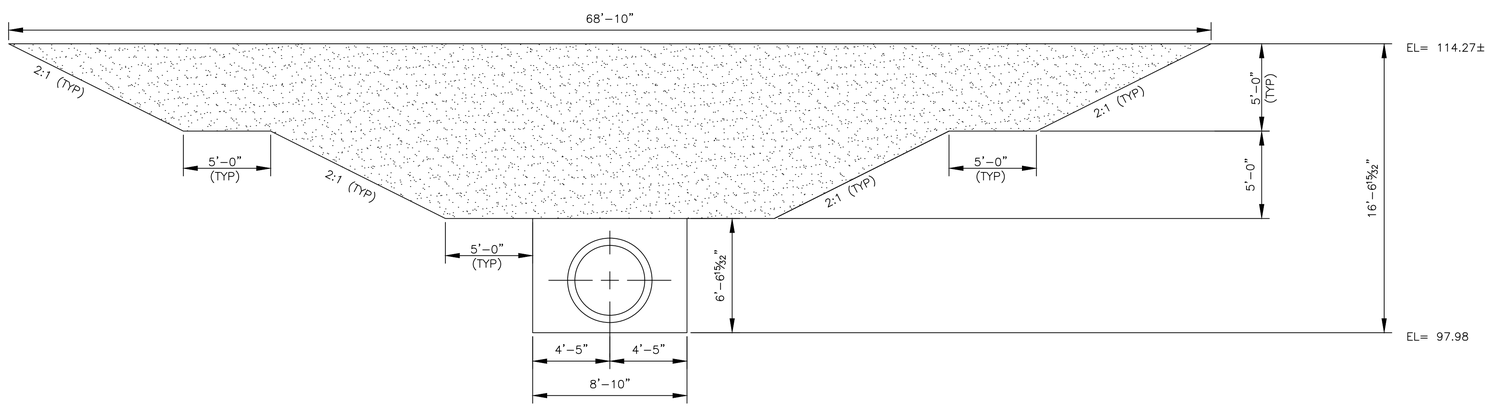

CELL 2 GATEWELL

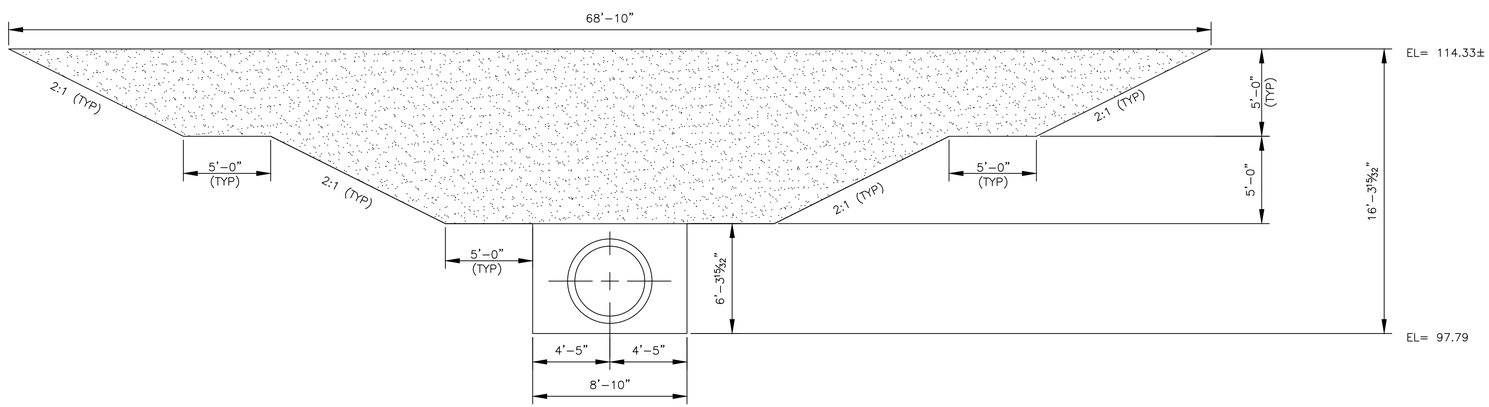

CELL 1 GATEWELL

LEGEND

DIKE ECAVATION/BACKFILL LIMITS

TRENCH ECAVATION/BACKFILL LIMITS

NOTE:

1.) QUANTITIES SHOWN ON THE SHEET ARE APPROXIMATE VALUES AND ARE FOR CONTRACTOR INFORMATION ONLY.

2.) DIKE BACKFILL SHALL BE PLACED AND COMPACTED IN LIFTS NOT TO EXCEED TWELVE INCHES. (12-IN.)

3.) SEE PLAN AND PROFILE SHEETS FOR ADDITIONAL DETAILS.

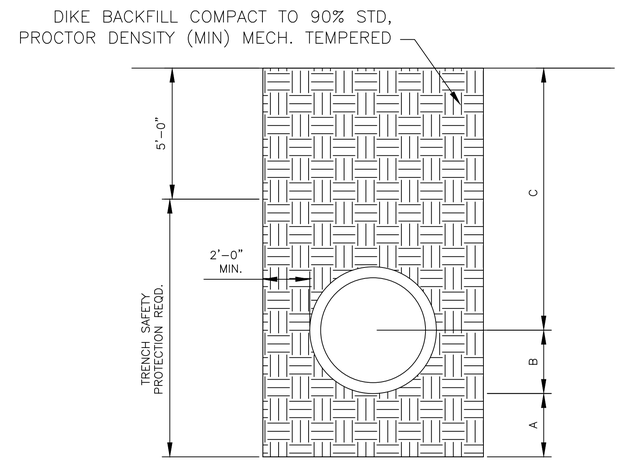

STANDARD PIPE BEDDING DETAIL

A. DIKE EMBANKMENT BEDDING PLACED BEFORE PIPE IS LAID UP TO FLOW LINE OF PIPE. (MIN. THICKNESS = 6")

B. DIKE EMBANKMENT BACK FILL PLACED AFTER PIPE IS LAID FROM BOTTOM OF PIPE TO SPRING LINE OF PIPE. (4" LIFTS, MECH. TAMPED).

C. FILL TRENCH W/ DIKE EMBANKMENT BACKFILL (PI <20) W/ 12" LIFTS COMPACT TO 95% STD. PROCTOR.

FOUNDATION PREPARATION (WELLPOINTS, GRAVEL AND/OR CEMENT STABILIZATION , OR APPROVED SUBSTITUTE) SHALL BE REQUIRED WHEN TRENCH BOTTOM IS UNSTABLE.

DIKE EMBANKMENT BACK FILLING AT STRUCTURES SHALL BE PLACED IN UNIFORM LAYERS, MOISTENED AS REQUIRED TO APPROXIMATE OPTIMUM MOISTURE CONTENTS AND COMPACTED TO 95% STANDARD PROCTOR DENSITY. THE THICKNESS OF EACH LOOSE LAYER SHALL EXCEED 12".

ALL BACKFILL IS SUBJECT TO INSPECTION, TESTING AND APPROVAL BY THE CITY ENGINEER'S OFFICE.

REVISIONS

NO.	DATE		APP.
A	09/01/19	ISSUED FOR REVIEW	
B	06/10/20	ISSUED FOR BID	

DESIGNED BY: CAP
DRAWN BY: MRIII
CHECKED BY: JV
APPROVED BY: RS
DATE: SEPTEMBER 2019

DANNENBAUM
ENGINEERING COMPANY-McALLEN, LLC
1109 Nolana Loop, Suite 209 McAllen, TX 78504 (956) 682-3977
TBPE REGISTRATION No. F-8999

STATE OF TEXAS — RICHARD L. SITZ — 63429 — REGISTERED PROFESSIONAL ENGINEER

CITY OF EDINBURG
WEST WATER TREATMENT PLANT
RESERVOIR IMPROVEMENTS

DIKE/PIPE EXCAVATION/BACKFILL DIAGRAM

0 1"
SCALE BAR IS ONE INCH ON ORIGINAL DRAWINGS

PROJECT NO: 4658-02

DRAWING NO: 0100C-005

SHEET NO: 17

NOTES:

1. DESIGNED ACCORDING TO AASHTO LRFD SPECIFICATIONS
2. REINFORCING STEEL SHALL BE PLACED WITH THE CENTER OF THE OUTSIDE LAYER OF BARS 2" FROM THE SURFACE OF THE CONCRETE.
3. ALL REINFORCING STEEL SHALL BE GRADE 60.
4. ALL CONCRETE SHALL BE CLASS "C" AND SHALL HAVE A MINIMUM COMPRESSIVE STRENGTH OF 3600 PSI.

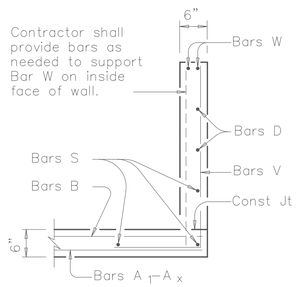

SECTION A–A

TABLE OF REINFORCING STEEL			
Bar	Size	Spa	No.
A	# 4	1'–0"	~
B	# 3	1'–6"	~
C	# 4	1'–0"	~
D	# 3	1'–0"	~
E	# 5	~	4
F	# 5	~	~
G	# 3	~	2
S	# 4	~	6
V	# 4	1'–0"	~
W	# 5	~	4

(1) Min Length = 6" + 8" x $\left(\frac{12 \times H - 7}{12 \times L}\right)$

Max Length = 12 x H + 3" x $\left(\frac{12 \times H - 7}{12 \times L}\right)$"

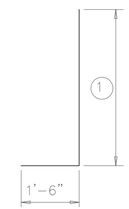

BARS V

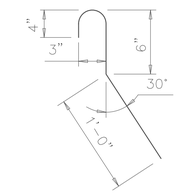

BARS C
(2'–0" long)

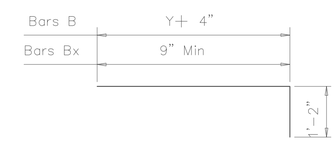

BARS B & B1–Bx

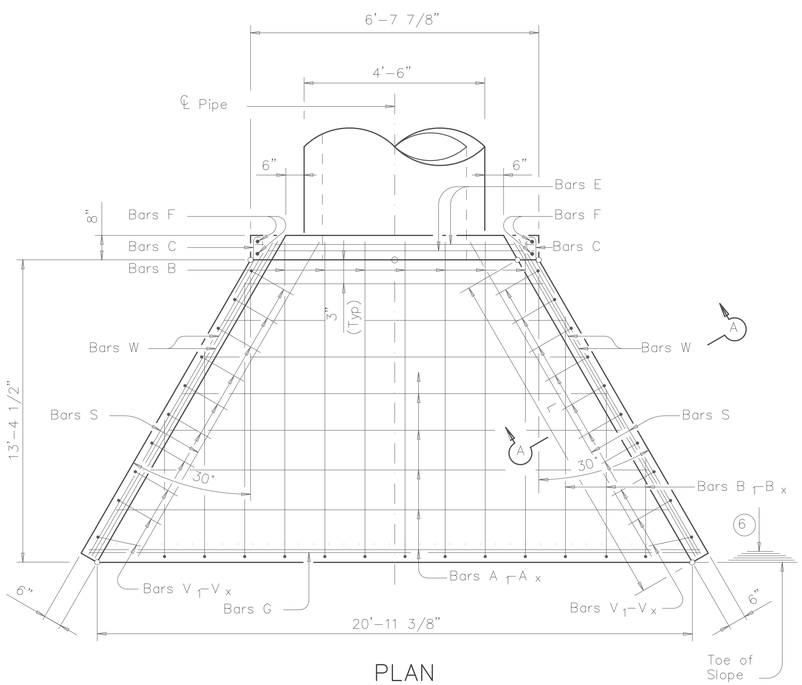

PLAN

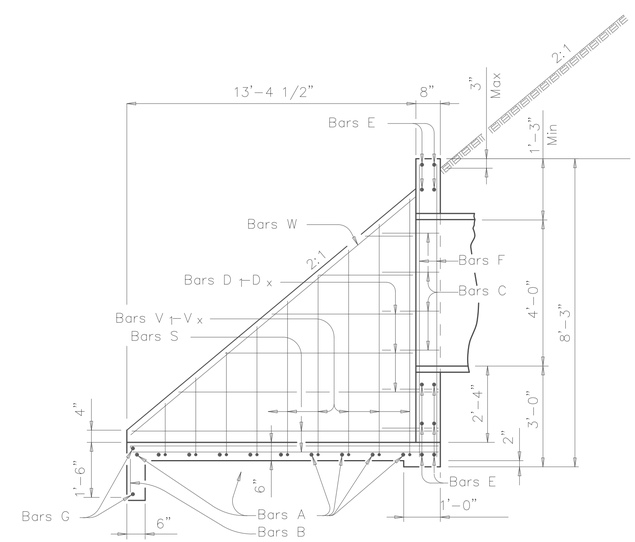

TYPICAL WING ELEVATION

REVISIONS

NO.	DATE		APP.
A	09/01/19	ISSUED FOR REVIEW	
B	06/10/20	ISSUED FOR BID	

DESIGNED BY: CAP
DRAWN BY: MRIII
CHECKED BY: JV
APPROVED BY: RS
DATE: SEPTEMBER 2019

DANNENBAUM
ENGINEERING COMPANY-McALLEN, LLC
1109 Nolana Loop, Suite 209 McAllen, TX 78504 (956) 682-3977
TBPE REGISTRATION No. F-8999

STATE OF TEXAS
RICHARD S. STITT
REGISTERED PROFESSIONAL ENGINEER
61424
6-10-2020

CITY OF EDINBURG
WEST WATER TREATMENT PLANT
RESERVOIR IMPROVEMENTS

CELL 1 AND 2
HEADWALL DETAIL

0 1"
SCALE BAR IS ONE INCH ON ORIGINAL DRAWINGS

PROJECT NO:
4658-02

DRAWING NO:
0100S-008

SHEET NO:
18

May 22, 2020 – 12:32pm matias.ramos3
G:\1540\4658-02 E Edinburg WTP Reservoir Imps (2019-05)\08 Const Doc Ph\08.01 IFB Dwgs\Sheet Files\018 0100S-008.dwg

NOTES:

1. FOR DUCKBILL CHECK VALVE PER MANUFACTURERS DETAILS
2. FOR HEADWALL DETAILS, SEE SHEET ENTITLED "CELL 1 AND 2 HEADWALL DETAIL."

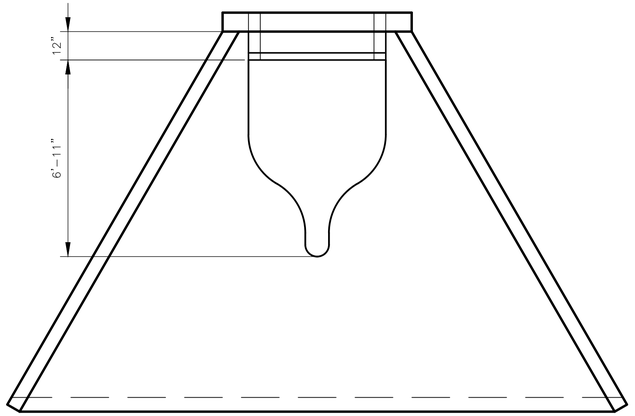

PLAN
NTS

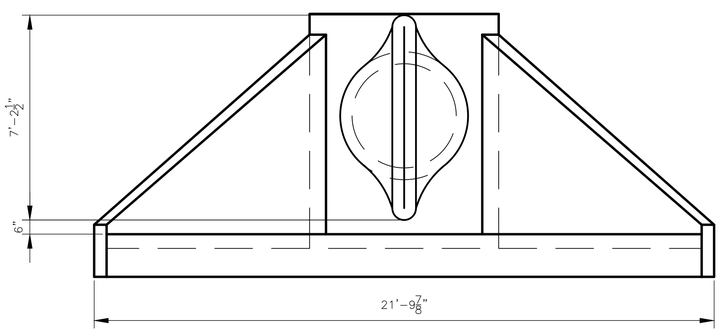

ELEVATION
NTS

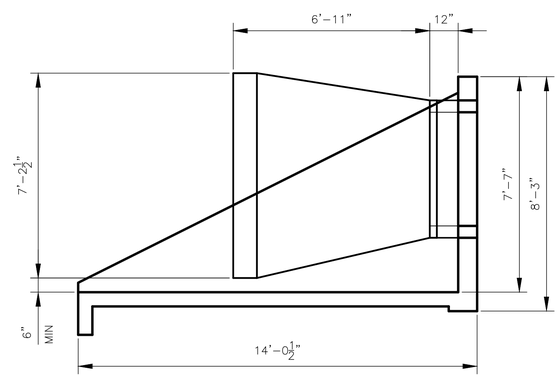

TYPICAL WING ELEVATION
NTS

REVISIONS

NO.	DATE		APP.
A	09/01/19	ISSUED FOR REVIEW	
B	06/10/20	ISSUED FOR BID	

DESIGNED BY: CAP
DRAWN BY: MRIII
CHECKED BY: JV
APPROVED BY: RS
DATE: SEPTEMBER 2019

DANNENBAUM
ENGINEERING COMPANY-McALLEN, LLC
1109 Nolana Loop, Suite 209 McAllen, TX 78504 (956) 682-3977
TBPE REGISTRATION No. F-8999

STATE OF TEXAS
RICHARD S. STITT
REGISTERED PROFESSIONAL ENGINEER
61424
6-10-2020

CITY OF EDINBURG
WEST WATER TREATMENT PLANT
RESERVOIR IMPROVEMENTS

CELL 1 AND 2
DUCKBILL CHECK VALVE DETAIL

0 1"
SCALE BAR IS ONE INCH ON ORIGINAL DRAWINGS

PROJECT NO:
4658-02

DRAWING NO:
0100S-009

SHEET NO:
19

May 22, 2020 – 12:32pm matias.ramos3
G:\1540\4658-02 E Edinburg WTP Reservoir Imps (2019-05)\08 Const Doc Ph\08.01 IFB Dwgs\Sheet Files\019 0100S-009.dwg

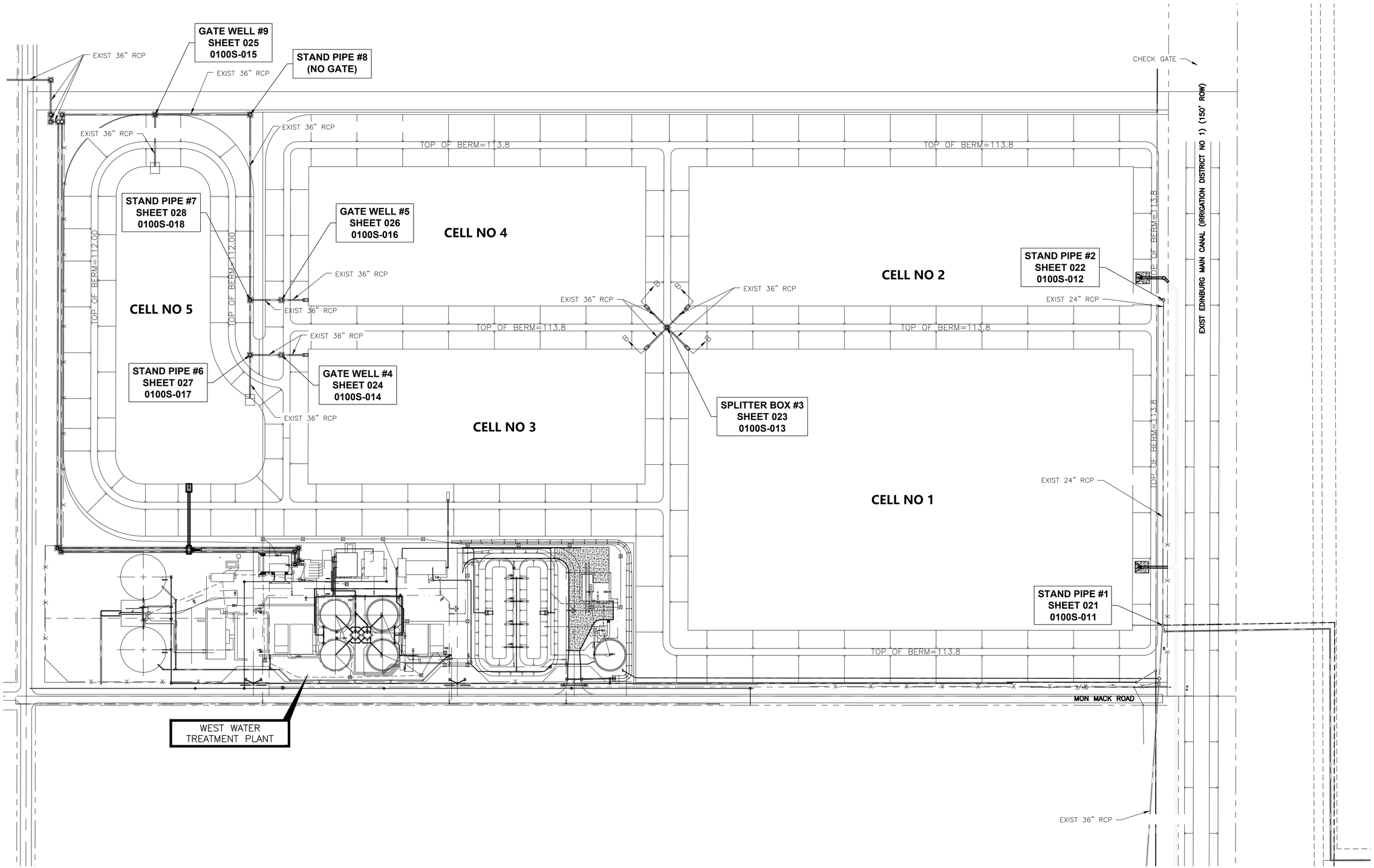

SLUICE GATE LOCATION MAP

SCALE: 1" = 100'

N

NO.	DATE	REVISIONS	APP.
A	09/01/19	ISSUED FOR REVIEW	R.S.
B	06/10/20	ISSUED FOR BID	R.S.

DESIGNED BY: CAP
DRAWN BY: MRIII
CHECKED BY: JV
APPROVED BY: RS
DATE: SEPTEMBER 2019

DANNENBAUM
ENGINEERING COMPANY-McALLEN, LLC
1109 Nolana Loop, Suite 209 McAllen, TX 78504 (956) 682-3977
TBPE REGISTRATION No. F-8999

STATE OF TEXAS
RICHARD L. SOTO
REGISTERED
PROFESSIONAL ENGINEER
61424

CITY OF EDINBURG
WEST WATER TREATMENT PLANT
RESERVOIR IMPROVEMENTS

SLUICE GATE
KEY MAP

0 1"
SCALE BAR IS ONE INCH ON ORIGINAL DRAWINGS

PROJECT NO:
4658-02

DRAWING NO:
0100S-010

SHEET NO:
20

May 22, 2020 – 12:33pm matias.ramos3
G:\1540\4658-02 E Edinburg WTP Reservoir Imps (2019-05)\08 Const Doc Ph\08.01 IFB Dwgs\Sheet Files\020 0100S-010.dwg

NOTES:
1.) Install Sluice Gate Per Manufacturer's Specifications and Drawing Entitled:"Sluice Gate Detail."
2.) Install Stem Guides per Manufacturer's Specifications and Drawing Entitled:"Sluice Gate Installation Details."

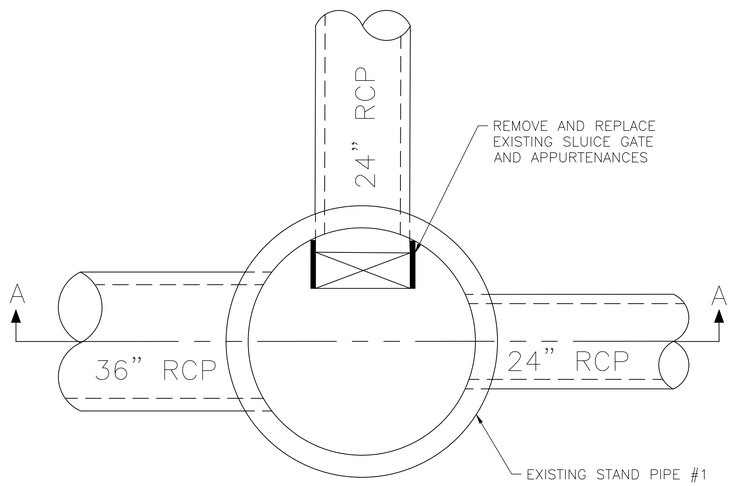

PLAN VIEW
SCALE: 1'-0" = 1/2"

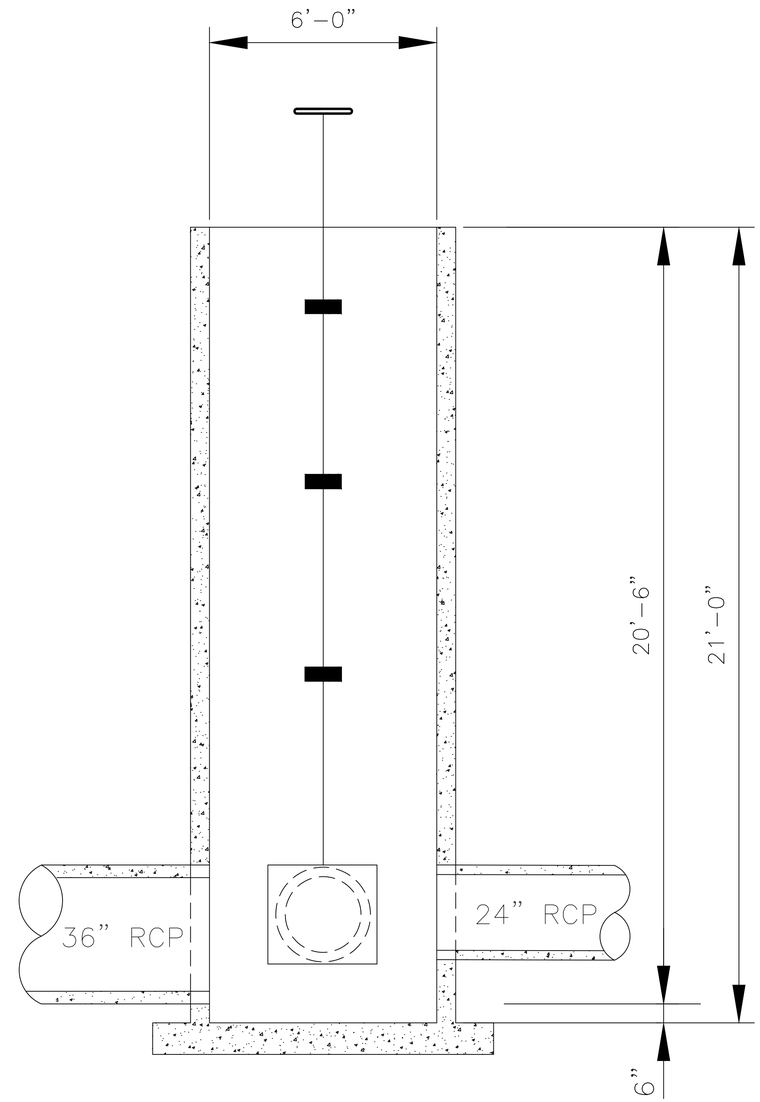

SECTION "A-A"
SCALE: 1'-0" = 1/2"

REVISIONS

NO.	DATE		APP.
A	09/01/19	ISSUED FOR REVIEW	
B	06/10/20	ISSUED FOR BID	

DESIGNED BY: CAP
DRAWN BY: MRIII
CHECKED BY: JV
APPROVED BY: RS
DATE: SEPTEMBER 2019

DANNENBAUM
ENGINEERING COMPANY-McALLEN, LLC
1109 Nolana Loop, Suite 209 McAllen, TX 78504 (956) 682-3977
TBPE REGISTRATION No. F-8999

STATE OF TEXAS
RICHARD S. SOTO
REGISTERED PROFESSIONAL ENGINEER
61424
6-10-2020

CITY OF EDINBURG
WEST WATER TREATMENT PLANT
RESERVOIR IMPROVEMENTS

STAND PIPE #1
RESERVOIR SLUICE GATE REPLACEMENT
SHEET 1 OF 1

0 1"
SCALE BAR IS ONE INCH ON ORIGINAL DRAWINGS

PROJECT NO:
4658-02

DRAWING NO:
0100S-011

SHEET NO:
21

May 22, 2020 – 12:33pm matias.ramos3
G:\1540\4658-02 E Edinburg WTP Reservoir Imps (2019-05)\08 Const Doc Ph\08.01 IFB Dwgs\Sheet Files\021 0100S-011.dwg

NOTES:
1.) Install Sluice Gate Per Manufacturer's Specifications and Drawing Entitled:"Sluice Gate Detail."
2.) Install Stem Guides per Manufacturer's Specifications and Drawing Entitled:"Sluice Gate Installation Details."

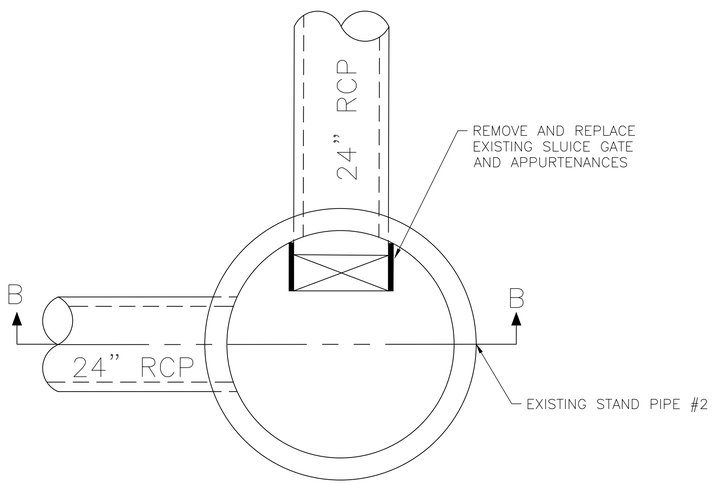

PLAN VIEW
SCALE: 1'-0" = 1/2"

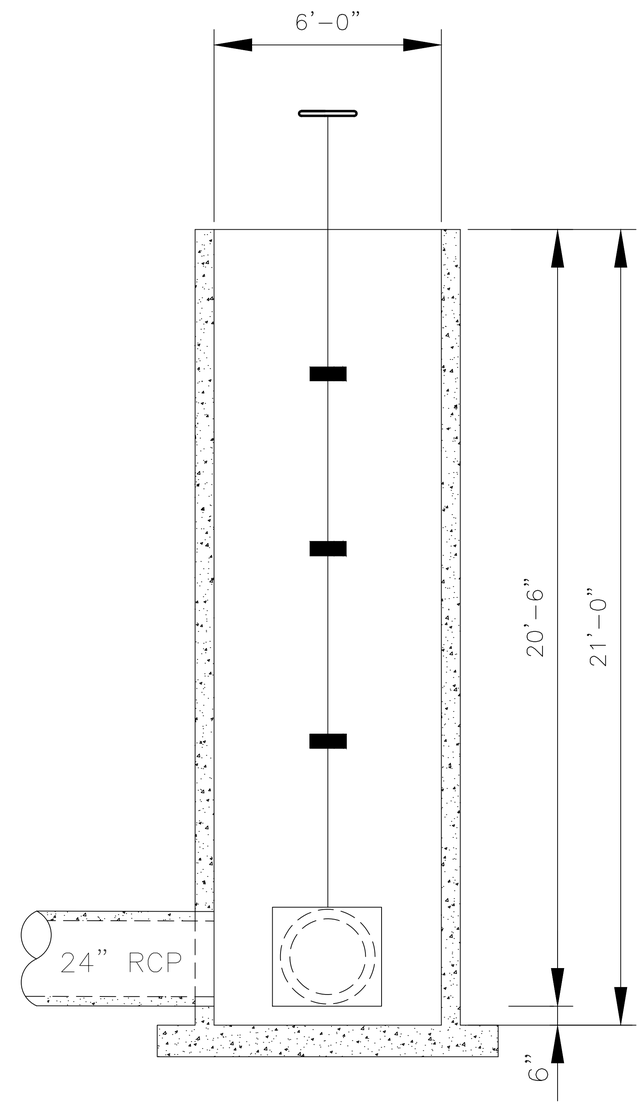

SECTION "B-B"
SCALE: 1'-0" = 1/2"

REVISIONS

NO.	DATE		APP.
A	09/01/19	ISSUED FOR REVIEW	
B	06/10/20	ISSUED FOR BID	

DESIGNED BY: CAP
DRAWN BY: MRIII
CHECKED BY: JV
APPROVED BY: RS
DATE: SEPTEMBER 2019

DANNENBAUM
ENGINEERING COMPANY-McALLEN, LLC
1109 Nolana Loop, Suite 209 McAllen, TX 78504 (956) 682-3977
TBPE REGISTRATION No. F-8999

STATE OF TEXAS
RICHARD L. SOTO
REGISTERED PROFESSIONAL ENGINEER
61424
6-10-2020

CITY OF EDINBURG
WEST WATER TREATMENT PLANT
RESERVOIR IMPROVEMENTS

STAND PIPE #2
RESERVOIR SLUICE GATE REPLACEMENT
(SHEET 1 OF 1)

0 1"
SCALE BAR IS ONE INCH ON ORIGINAL DRAWINGS

PROJECT NO:
4658-02

DRAWING NO:
0100S-012

SHEET NO:
22

May 22, 2020 – 12:33pm matias.ramos3
G:\1540\4658-02 E Edinburg WTP Reservoir Imps (2019-05)\08 Const Doc Ph\08.01 IFB Dwgs\Sheet Files\022 0100S-012.dwg

NOTES:
1.) Install Sluice Gate Per Manufacturer's Specifications and Drawing Entitled:"Sluice Gate Detail."
2.) Install Stem Guides per Manufacturer's Specifications and Drawing Entitled:"Sluice Gate Installation Details."

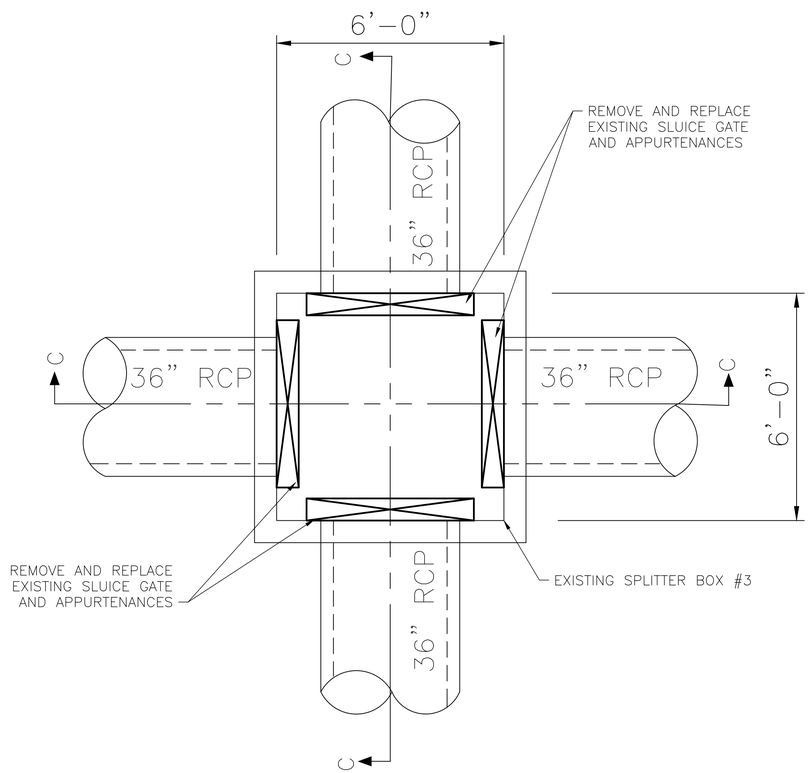

PLAN VIEW
SCALE: 1'-0' = 1/2"

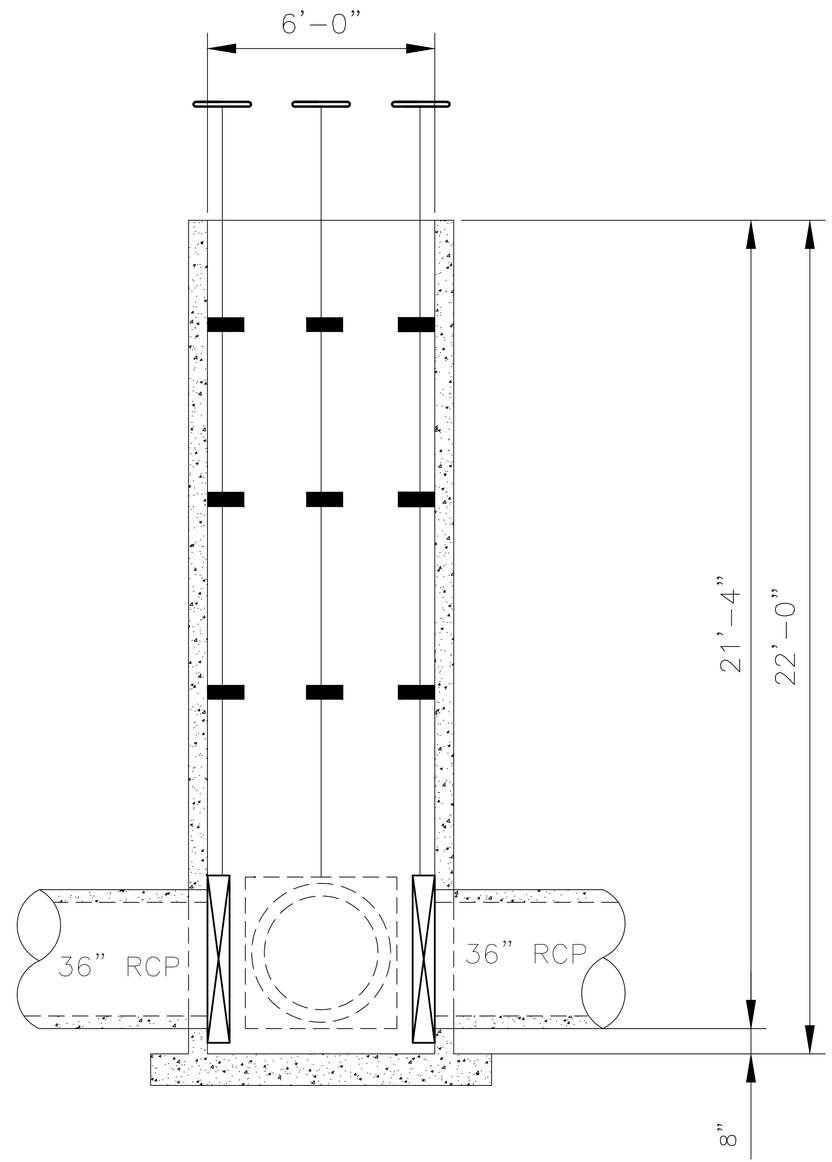

SECTION "C-C"
SCALE: 1'-0" = 1/2'

REVISIONS

NO.	DATE		APP.
A	09/01/19	ISSUED FOR REVIEW	
B	06/10/20	ISSUED FOR BID	

DESIGNED BY: CAP
DRAWN BY: MRIII
CHECKED BY: JV
APPROVED BY: RS
DATE: SEPTEMBER 2019

DANNENBAUM
ENGINEERING COMPANY-McALLEN, LLC
1109 Nolana Loop, Suite 209 McAllen, TX 78504 (956) 682-3977
TBPE REGISTRATION No. F-8999

STATE OF TEXAS
REGISTERED PROFESSIONAL ENGINEER
JOHN D. VELA
65424
6-10-2020

CITY OF EDINBURG
WEST WATER TREATMENT PLANT
RESERVOIR IMPROVEMENTS

SPLITTER BOX #3
RESERVOIR SLUICE GATE REPLACEMENTS
SHEET 1 OF 1

0 1"
SCALE BAR IS ONE INCH ON ORIGINAL DRAWINGS

PROJECT NO:
4658-02

DRAWING NO:
0100S-013

SHEET NO:
23

May 22, 2020 - 12:33pm matias.ramos3
G:\1540\4658-02 E Edinburg WTP Reservoir Imps (2019-05)\08 Const Doc Ph\08.01 IFB Dwgs\Sheet Files\023 0100S-013.dwg

NOTES:
1.) Install Sluice Gate Per Manufacturer's Specifications and Drawing Entitled:"Sluice Gate Detail."
2.) Install Stem Guides per Manufacturer's Specifications and Drawing Entitled:"Sluice Gate Installation Details."

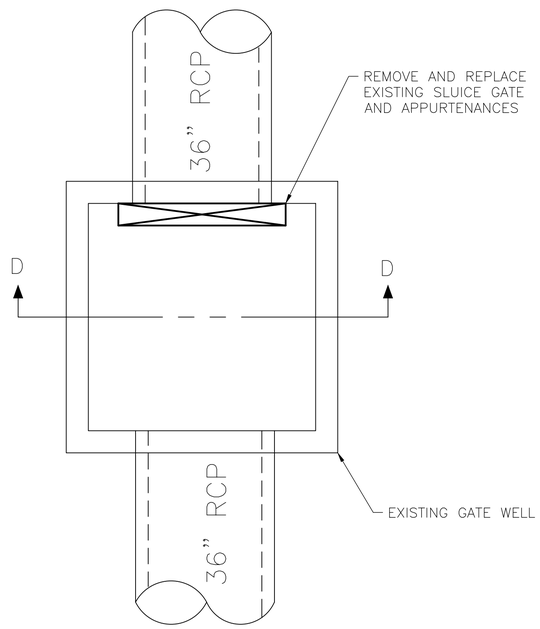

PLAN VIEW
SCALE: 1'-0" = 1/2"

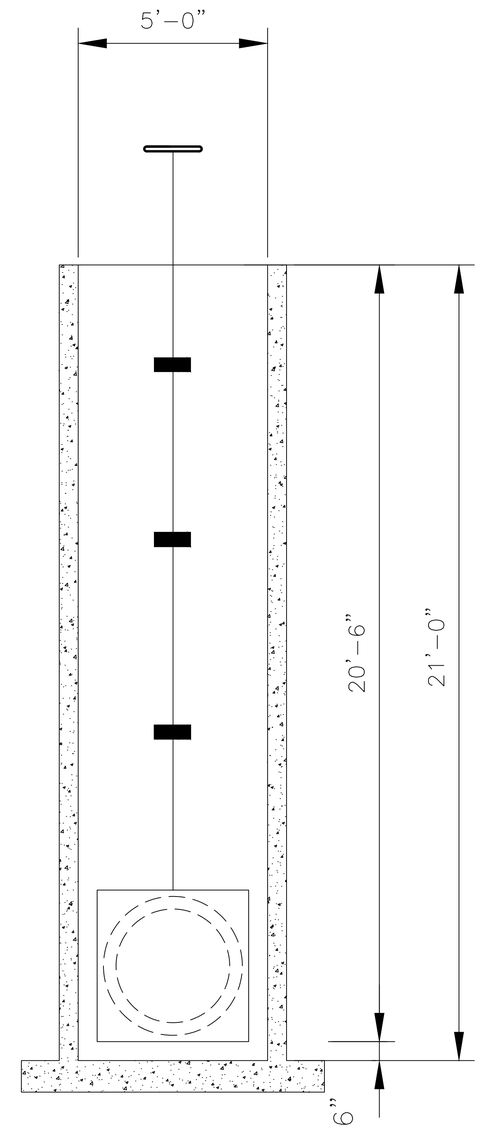

SECTION "D-D"
SCALE: 1'-0" = 1/2"

REVISIONS

NO.	DATE		APP.
A	09/01/19	ISSUED FOR REVIEW	
B	06/10/20	ISSUED FOR BID	

DESIGNED BY: CAP
DRAWN BY: MRIII
CHECKED BY: JV
APPROVED BY: RS
DATE: SEPTEMBER 2019

DANNENBAUM
ENGINEERING COMPANY-McALLEN, LLC
1109 Nolana Loop, Suite 209 McAllen, TX 78504 (956) 682-3977
TBPE REGISTRATION No. F-8999

STATE OF TEXAS
RICHARD A. SMITH
63424
REGISTERED PROFESSIONAL ENGINEER
6-10-2020

CITY OF EDINBURG
WEST WATER TREATMENT PLANT
RESERVOIR IMPROVEMENTS

GATEWELL #4
RESERVOIR SLUICE GATE REPLACEMENTS
SHEET 1 OF 1

0 1"
SCALE BAR IS ONE INCH ON ORIGINAL DRAWINGS

PROJECT NO:
4658-02

DRAWING NO:
0100S-014

SHEET NO:
24

May 22, 2020 - 12:33pm matias.ramos3
G:\1540\4658-02 E Edinburg WTP Reservoir Imps (2019-05)\08 Const Doc Ph\08.01 IFB Dwgs\Sheet Files\024 0100S-014.dwg

NOTES:
1.) Install Sluice Gate Per Manufacturer's Specifications and Drawing Entitled:"Sluice Gate Detail."
2.) Install Stem Guides per Manufacturer's Specifications and Drawing Entitled:"Sluice Gate Installation Details."

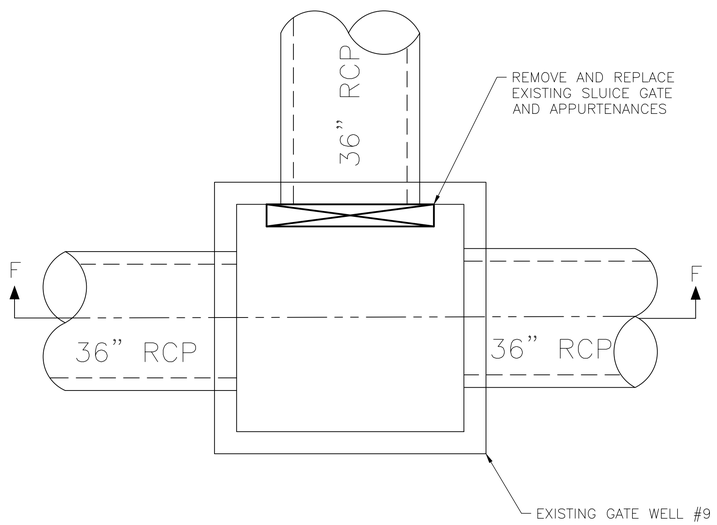

PLAN VIEW
SCALE: 1'-0' = 1/2"

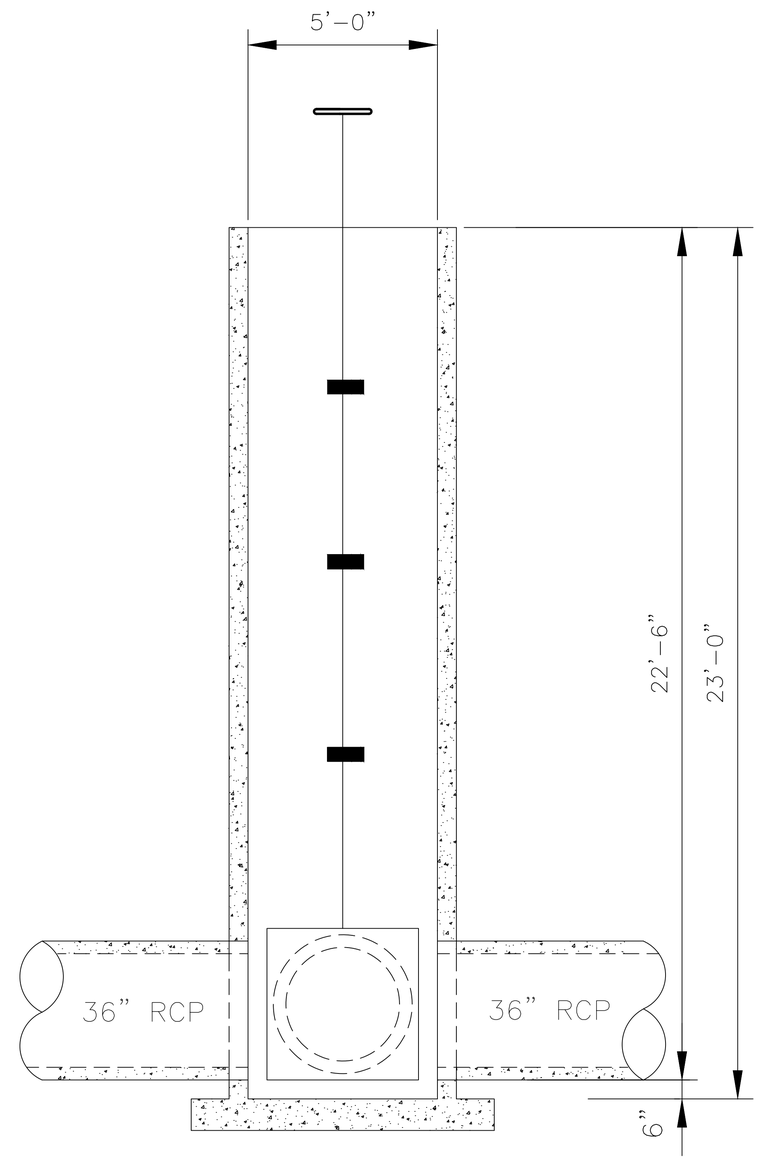

SECTION "F-F"
SCALE: 1'-0" = 1/2"

REVISIONS

NO.	DATE		APP.
A	09/01/19	ISSUED FOR REVIEW	
B	06/10/20	ISSUED FOR BID	

DESIGNED BY: CAP
DRAWN BY: MRIII
CHECKED BY: JV
APPROVED BY: RS
DATE: SEPTEMBER 2019

DANNENBAUM
ENGINEERING COMPANY-McALLEN, LLC
1109 Nolana Loop, Suite 209 McAllen, TX 78504 (956) 682-3977
TBPE REGISTRATION No. F-8999

STATE OF TEXAS
RICHARD A. SMITH
65424
REGISTERED PROFESSIONAL ENGINEER
6-12-2020

CITY OF EDINBURG
WEST WATER TREATMENT PLANT
RESERVOIR IMPROVEMENTS

GATEWELL #9
RESERVOIR SLUICE GATE REPLACEMETNS
SHEET 1 OF 1

0 1"
SCALE BAR IS ONE INCH ON ORIGINAL DRAWINGS

PROJECT NO:
4658-02

DRAWING NO:
0100S-015

SHEET NO:
25

May 22, 2020 - 12:33pm matias.ramos3
G:\1540\4658-02 E Edinburg WTP Reservoir Imps (2019-05)\08 Const Doc Ph\08.01 IFB Dwgs\Sheet Files\025 0100S-015.dwg

NOTES:
1.) Install Sluice Gate Per Manufacturer's Specifications and Drawing Entitled:"Sluice Gate Detail."
2.) Install Stem Guides per Manufacturer's Specifications and Drawing Entitled:"Sluice Gate Installation Details."

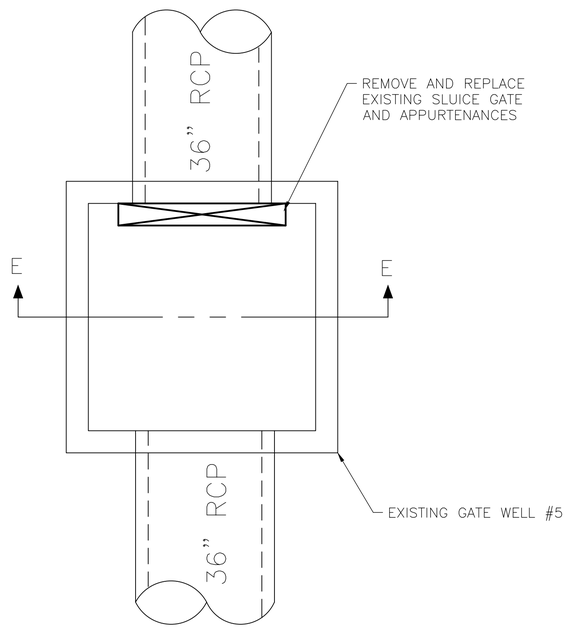

PLAN VIEW
SCALE: 1'-0" = 1/2"

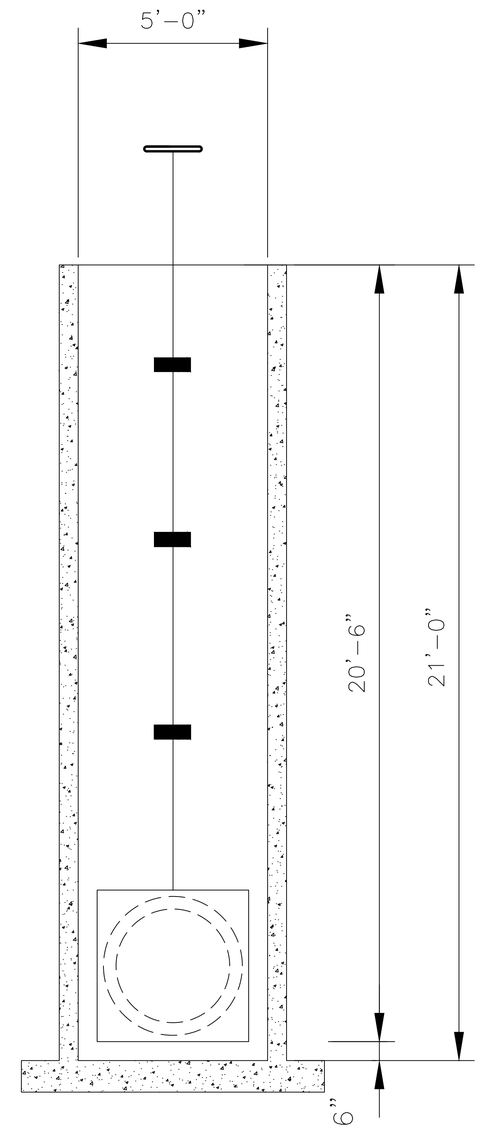

SECTION "E-E"
SCALE: 1'-0" = 1/2"

REVISIONS

NO.	DATE		APP.
A	09/01/19	ISSUED FOR REVIEW	
B	06/10/20	ISSUED FOR BID	

DESIGNED BY: CAP
DRAWN BY: MRIII
CHECKED BY: JV
APPROVED BY: RS
DATE: SEPTEMBER 2019

DANNENBAUM
ENGINEERING COMPANY-McALLEN, LLC
1109 Nolana Loop, Suite 205 McAllen, TX 78504 (956) 682-3977
TBPE REGISTRATION No. F-8999

STATE OF TEXAS
RICHARD A. SOTO
65424
REGISTERED PROFESSIONAL ENGINEER
6-12-2020

CITY OF EDINBURG
WEST WATER TREATMENT PLANT
RESERVOIR IMPROVEMENTS

GATEWELL #5
RESERVOIR SLUICE GATE REPLACEMENTS
(SHEET 1 of 1)

0 1"
SCALE BAR IS ONE INCH ON ORIGINAL DRAWINGS

PROJECT NO:
4658-02

DRAWING NO:
0100S-016

SHEET NO:
26

May 22, 2020 - 12:33pm matias.ramos3
G:\1540\4658-02 E Edinburg WTP Reservoir Imps (2019-05)\08 Const Doc Ph\08.01 IFB Dwgs\Sheet Files\026 0100S-016.dwg

NOTES:
1.) Install Sluice Gate Per Manufacturer's Specifications and Drawing Entitled:"Sluice Gate Detail."
2.) Install Stem Guides per Manufacturer's Specifications and Drawing Entitled:"Sluice Gate Installation Details."

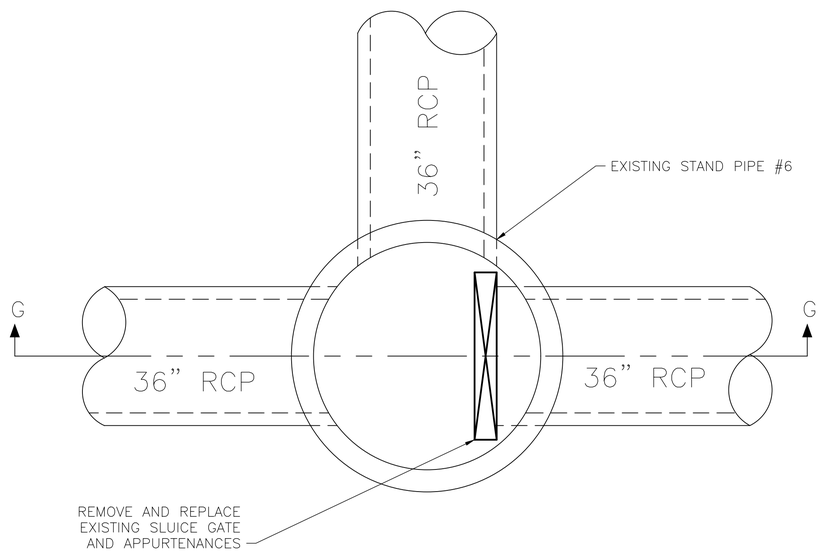

PLAN VIEW
SCALE: 1'-0" = 1/2"

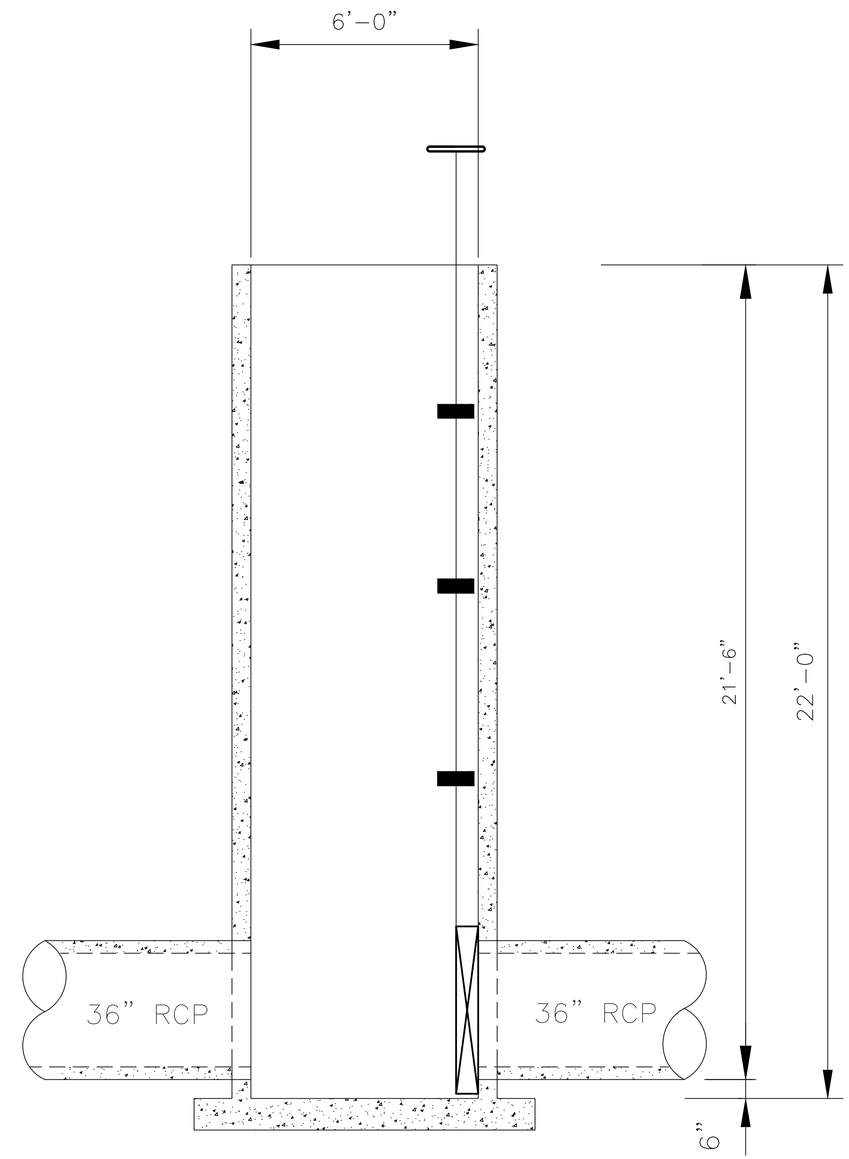

SECTION "G-G"
SCALE: 1'-0" = 1/2"

REVISIONS

NO.	DATE		APP.
A	09/01/19	ISSUED FOR REVIEW	
B	06/10/20	ISSUED FOR BID	

DESIGNED BY: CAP
DRAWN BY: MRIII
CHECKED BY: JV
APPROVED BY: RS
DATE: SEPTEMBER 2019

DANNENBAUM
ENGINEERING COMPANY-McALLEN, LLC
1109 Nolana Loop, Suite 209 McAllen, TX 78504 (956) 682-3977
TBPE REGISTRATION No. F-8999

STATE OF TEXAS
RICHARD L. SMITH
63424
REGISTERED
PROFESSIONAL ENGINEER
Richard L. Smith P.E.
5-22-2020

CITY OF EDINBURG
WEST WATER TREATMENT PLANT
RESERVOIR IMPROVEMENTS

STAND PIPE #6
RESERVOIR SLUICE GATE REPLACEMENT
(SHEET 1 OF 1)

0 1"
SCALE BAR IS ONE INCH ON ORIGINAL DRAWINGS

PROJECT NO:
4658-02

DRAWING NO:
0100S-017

SHEET NO:
27

May 22, 2020 – 12:33pm matias.ramos3
G:\1540\4658-02 E Edinburg WTP Reservoir Imps (2019-05)\08 Const Doc Ph\08.01 IFB Dwgs\Sheet Files\027 0100S-017.dwg

NOTES:
1.) Install Sluice Gate Per Manufacturer's Specifications and Drawing Entitled:"Sluice Gate Detail."
2.) Install Stem Guides per Manufacturer's Specifications and Drawing Entitled:"Sluice Gate Installation Details."

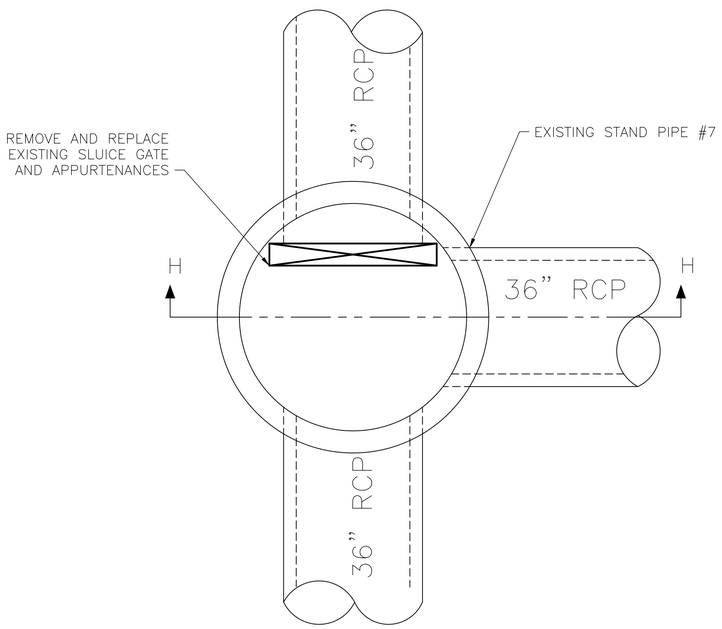

PLAN VIEW
SCALE: 1'-0" = 1/2"

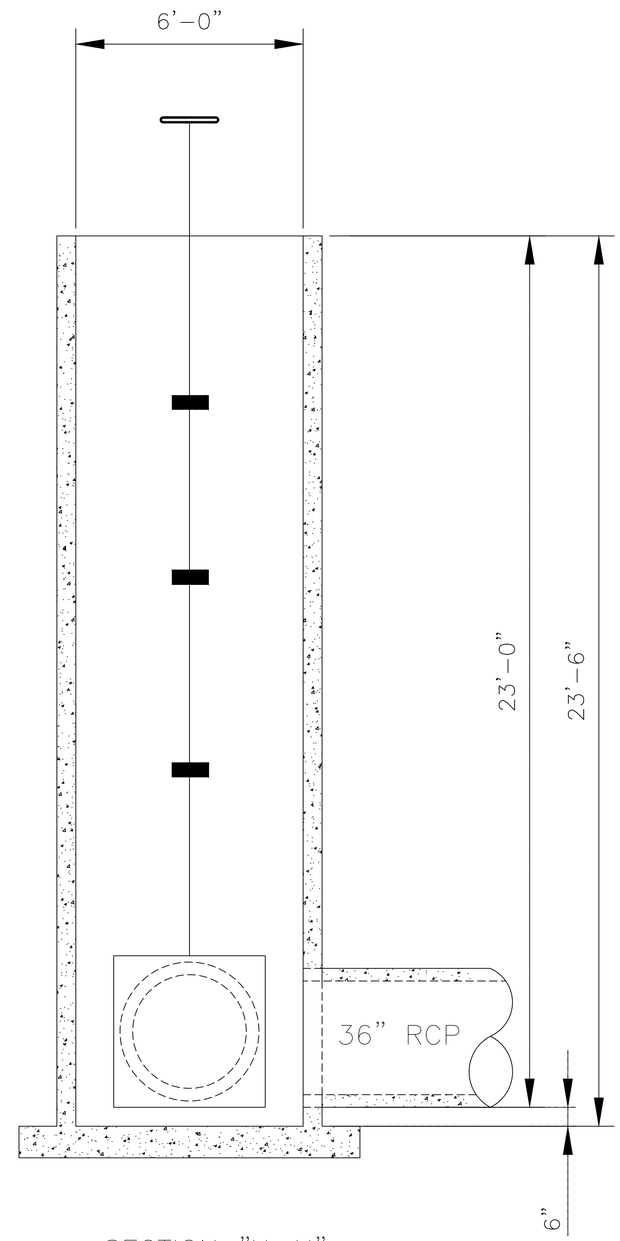

SECTION "H-H"
SCALE: 1'-0" = 1/2"

REVISIONS

NO.	DATE		APP.
A	09/01/19	ISSUED FOR REVIEW	
B	06/10/20	ISSUED FOR BID	

DESIGNED BY: CAP
DRAWN BY: MRIII
CHECKED BY: JV
APPROVED BY: RS
DATE: SEPTEMBER 2019

DANNENBAUM
ENGINEERING COMPANY-McALLEN, LLC
1109 Nolana Loop, Suite 209 McAllen, TX 78504 (956) 682-3977
TBPE REGISTRATION No. F-8999

STATE OF TEXAS
RICHARD S. SOTO
REGISTERED PROFESSIONAL ENGINEER
61424
6-10-2020

CITY OF EDINBURG
WEST WATER TREATMENT PLANT
RESERVOIR IMPROVEMENTS

STAND PIPE # 7
RESERVOIR SLUICE GATE REPLACEMENT
(SHEET 1 OF 1)

0 1"
SCALE BAR IS ONE INCH ON ORIGINAL DRAWINGS

PROJECT NO:
4658-02

DRAWING NO:
0100S-018

SHEET NO:
28

May 22, 2020 - 12:34pm matias.ramos3
G:\1540\4658-02 E Edinburg WTP Reservoir Imps (2019-05)\08 Const Doc Ph\08.01 IFB Dwgs\Sheet Files\028 0100S-018.dwg

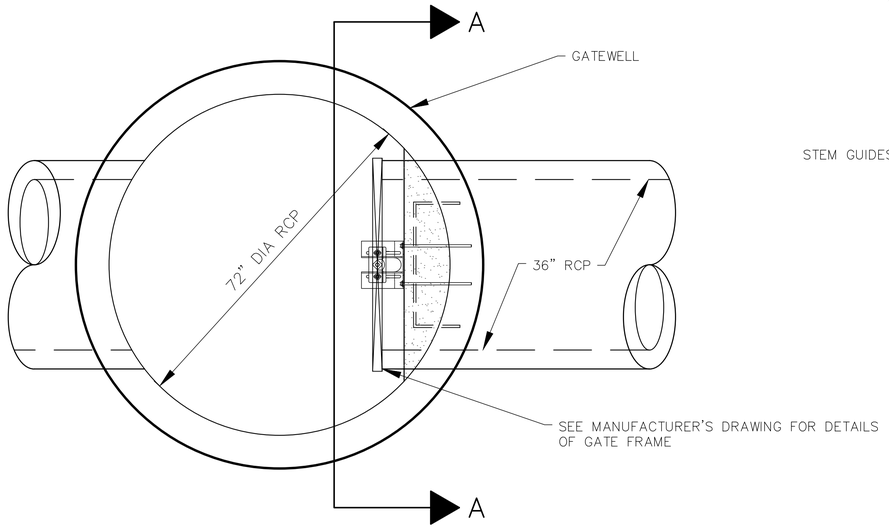

ELEVATION VIEW
SCALE: ¾"=1"

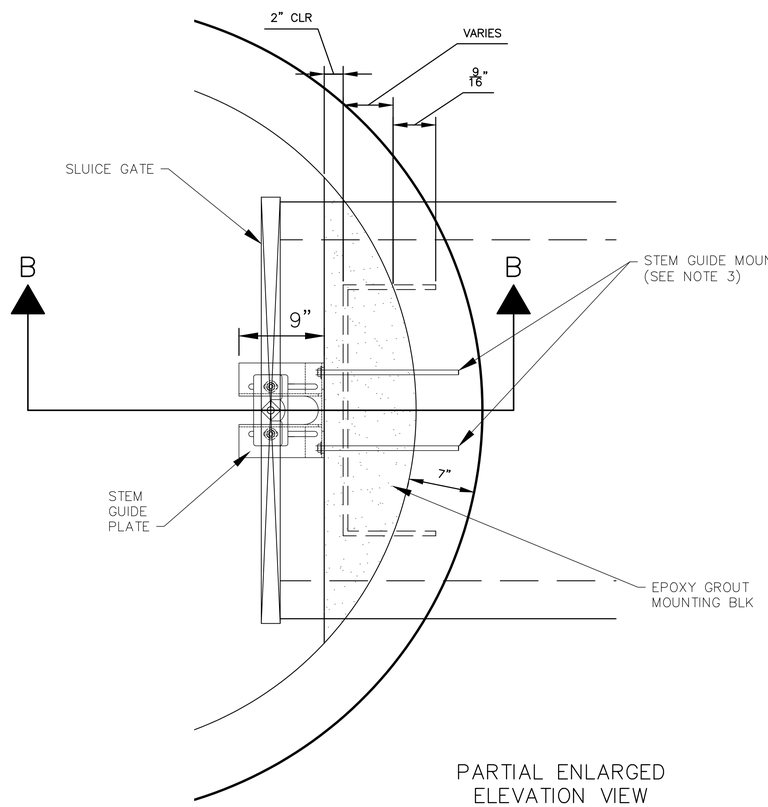

PARTIAL ENLARGED ELEVATION VIEW
SCALE: 1-½"=1"

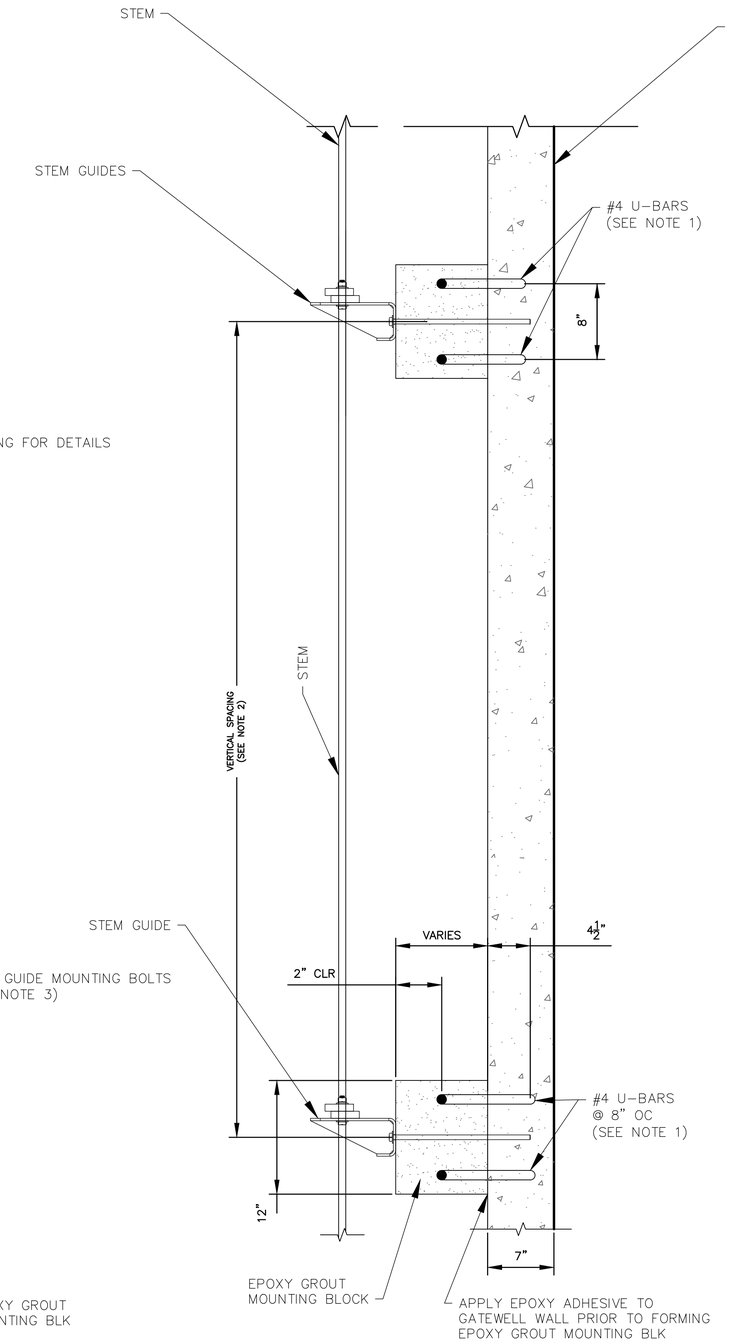

SECTION B-B
SCALE: 1-½"=1"

NOTE:

1. INSTALL U-BARS: PRE-DRILL 4½" DEPTH HOLE IN GATEWELL, ADD EPOXY ADHESIVE, AND INSERT U-BAR.
2. VERTICAL SPACING BETWEEN MOUNTING BLOCK VARIES BETWEEN 57" AND 70½" (USE MANUFACTURER'S RECOMMENDATION)
3. STEM GUIDE MOUNTING BOLTS ARE TO BE INSTALLED INTO PREDRILLED 4½" DEPTH HOLES; ADD EPOXY AND INSERT
4. CONTRACTOR IS TO SUBMIT ALTERNATIVE MANUFACTURER DETAILS TO ENGINEER FOR APPROVAL PRIOR TO INSTALLATION.

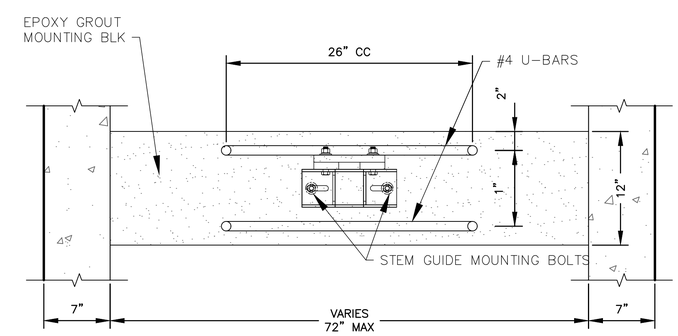

SECTION A-A
SCALE: 1-½"=1"

REVISIONS

NO.	DATE		APP.
A	09/01/19	ISSUED FOR REVIEW	
B	06/10/20	ISSUED FOR BID	R.S.

DESIGNED BY: CAP
DRAWN BY: MRIII
CHECKED BY: JV
APPROVED BY: RS
DATE: SEPTEMBER 2019

DANNENBAUM
ENGINEERING COMPANY-McALLEN, LLC
1109 Nolana Loop, Suite 209 McAllen, TX 78504 (956) 682-3977
TBPE REGISTRATION No. F-8999

STATE OF TEXAS
RICHARD S. SOTO
REGISTERED PROFESSIONAL ENGINEER
61424
6-10-2020

CITY OF EDINBURG
WEST WATER TREATMENT PLANT
RESERVOIR IMPROVEMENTS

SLUICE GATE STEM
INSTALLATION DETAILS
SHEET 1 OF 2

0 1"
SCALE BAR IS ONE INCH ON ORIGINAL DRAWINGS

PROJECT NO: 4658-02
DRAWING NO: 0100S-019
SHEET NO: 29

May 22, 2020 – 12:34pm matias.ramos3
G:\1540\4658-02 E Edinburg WTP Reservoir Imps (2019-05)\08 Const Doc Ph\08.01 IFB Dwgs\Sheet Files\029 0100S-019.dwg

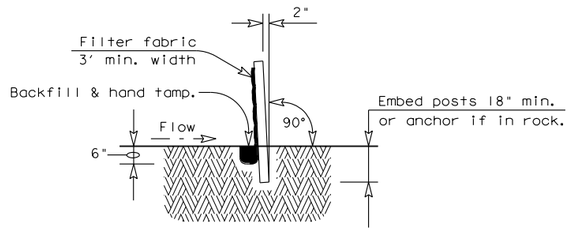

SECTION A-A

GENERAL NOTES

1. The guidelines shown hereon are suggestions only and may be modified by the Engineer.

PLAN SHEET LEGEND

Sediment Control Fence —— SCF ——

SEDIMENT CONTROL FENCE USAGE GUIDELINES

A sediment control fence may be constructed near the downstream perimeter of a disturbed area along a contour to intercept sediment from overland runoff. A 2 year storm frequency may be used to calculate the flow rate to be filtered.

Sediment control fence should be sized to filter a max. flow through rate of 100 GPM/FT^2. Sediment control fence is not recommended to control erosion from a drainage area larger than 2 acres.

Galv. Hinge joint knot woven mesh (12.5 Ga. Min.) requires a minimum of five horizontal wires spaced at a max. 12 inches apart and all vertical wires spaced at a max. 12 inches apart.

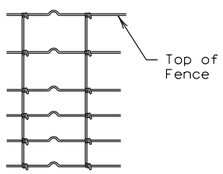

Hinge Joint Knot Woven Mesh (Option)

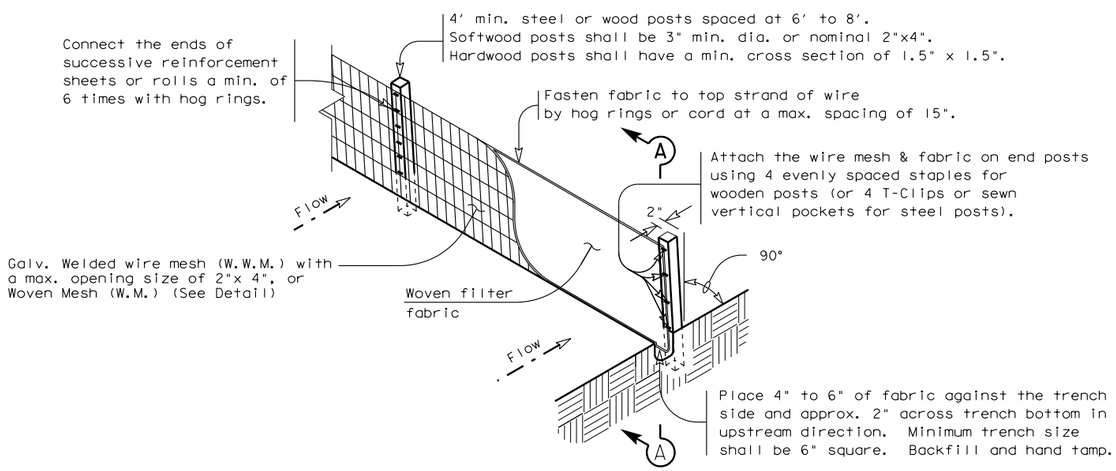

TEMPORARY SEDIMENT CONTROL FENCE

—— SCF ——

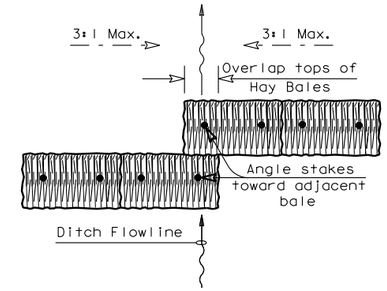

PLAN VIEW

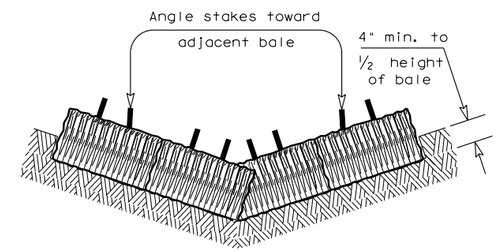

PROFILE VIEW

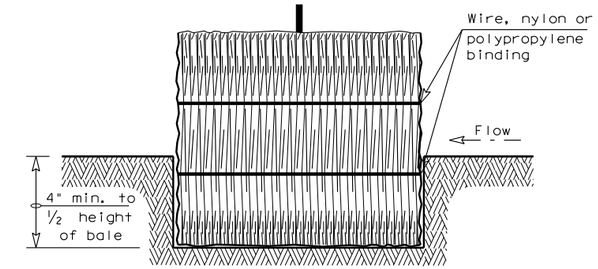

SECTION B-B

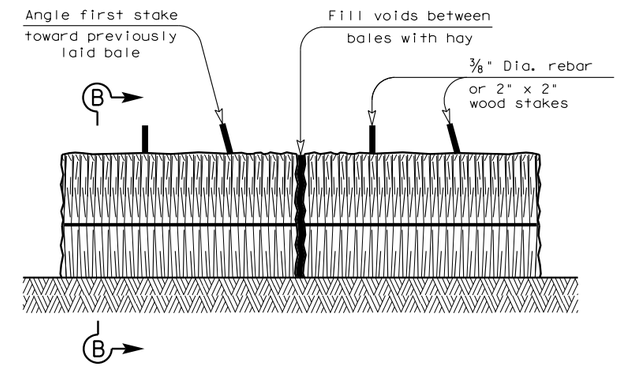

BALED HAY FOR EROSION CONTROL

—— BH ——

PLANS SHEET LEGEND

Baled Hay —— BH ——

BALED HAY USAGE GUIDELINES

A Baled Hay installation may be constructed near the downstream perimeter of a disturbed area along a contour to intercept sediment from overland runoff. A two year storm frequency may be used to calculate the flow rate to be filtered. The installation should be sized to filter a maximum flow thru rate of 5 GPM/FT^2 of cross sectional area. Baled hay may be used at the following locations:

1. Where the runoff approaching the baled hay flows over disturbed soil for less than 100'. If the slope of the disturbed soil exceeds 10%, the length of slope upstream the baled hay should be less than 50'.
2. Where the installation will be required for less than 3 months.
3. Where the contributing drainage area is less than ½ acre.

For Baled Hay installations in small ditches, the additional following considerations apply:

1. The ditch sideslopes should be graded as flat as possible to maximize the drainage flowrate thru the hay.
2. The ditch should be graded large enough to contain the overtopping drainage when sediment has filled to the top of the baled hay.

Bales should be replaced usually every 2 months or more often during wet weather when loss of structural integrity is accelerated.

GENERAL NOTES

1. Hay bales shall be a minimum of 30" in length and weigh a minimum of 50 Lbs.
2. Hay bales shall be bound by either wire or nylon or polypropylene string. The bales shall be composed entirely of vegetative matter.
3. Hay bales shall be embedded in the soil a minimum of 4" and where possible ½ the height of the bale.
4. Hay bales shall be placed in a row with ends tightly abutting the adjacent bales. The bales shall be placed with bindings parallel to the ground.
5. Hay bales shall be securely anchored in place with ⅜" Dia. rebar or 2" x 2" wood stakes, driven through the bales. The first stake shall be angled towards the previously laid bale to force the bales together.
6. The guidelines shown hereon are suggestions only and may be modified by the Engineer.

Texas Department of Transportation
Design Division Standard

TEMPORARY EROSION, SEDIMENT AND WATER POLLUTION CONTROL MEASURES

FENCE & BALED HAY

EC(1)-09

FILE: ec109.dgn	DN: TxDOT	CK: AM	DW: TV	CK: BD
© TxDOT June 1993	CONT	SECT	JOB	HIGHWAY
REVISIONS	0086	14	066	LOOP 20
	DIST		COUNTY	SHEET NO.
	22		WEBB	361

DATE:
FILE:

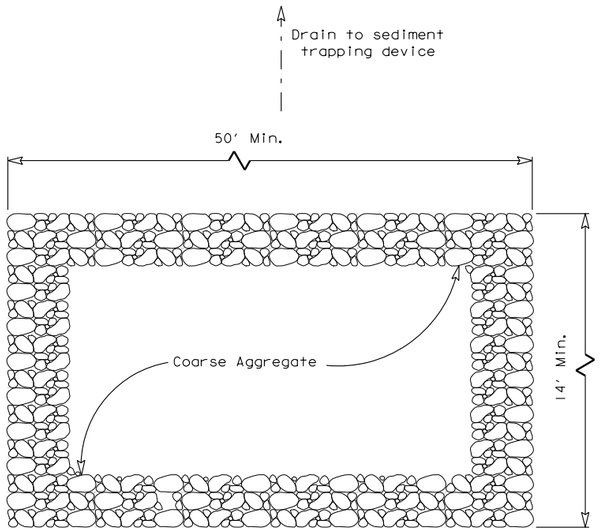

PLAN

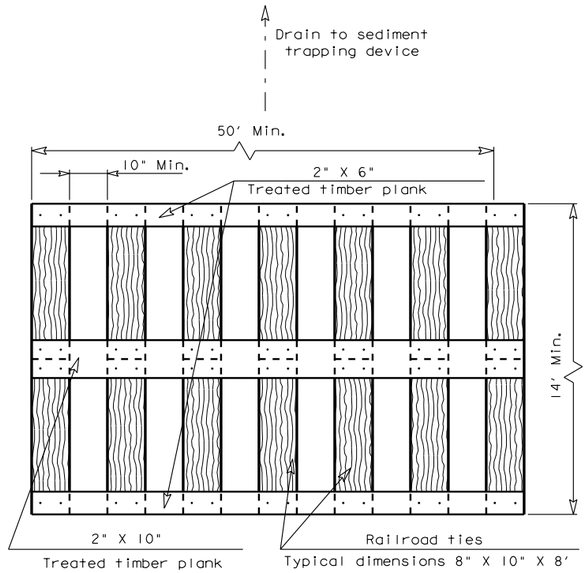

PLAN

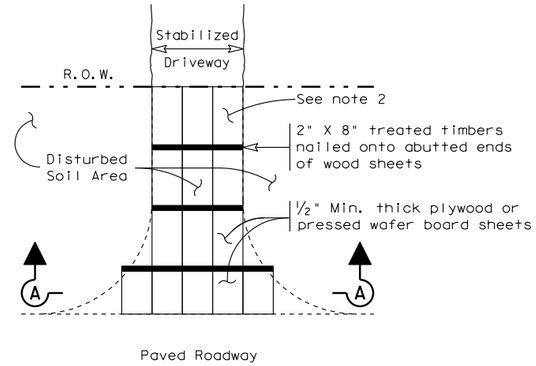

PLAN

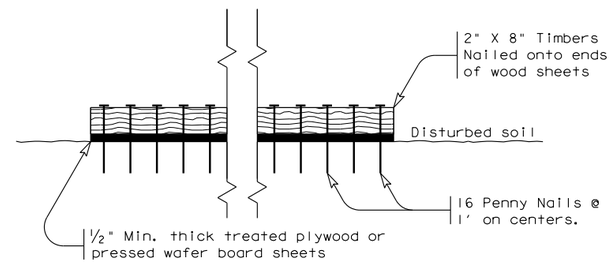

SECTION A-A

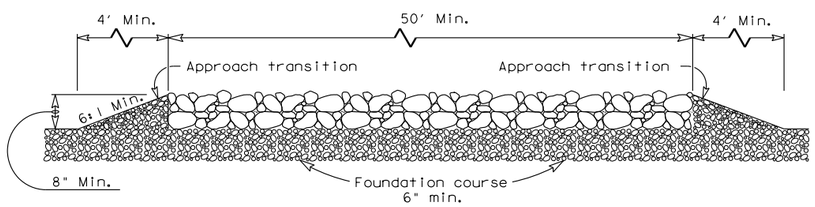

PROFILE

CONSTRUCTION EXIT (TYPE 1)

GENERAL NOTES

1. The length of the type 1 construction exit shall be as indicated on the plans, but not less than 50′.
2. The coarse aggregate should be open graded with a size of 4" to 8".
3. The approach transitions should be no steeper than 6:1 and constructed as directed by the Engineer.
4. The construction exit foundation course shall be flexible base, bituminous concrete, portland cement concrete or other material as approved by the Engineer.
5. The construction exit shall be graded to allow drainage to a sediment trapping device.
6. The guidelines shown hereon are suggestions only and may be modified by the Engineer.

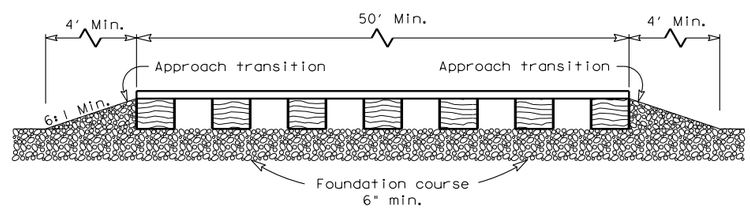

PROFILE

CONSTRUCTION EXIT (TYPE 2)

GENERAL NOTES

1. The length of the type 2 construction exit shall be as indicated on the plans, but not less than 50′.
2. The treated timber planks shall be attached to the railroad ties with ½"x 6" min. lag bolts. Other fasteners may be used as approved by the Engineer.
3. The treated timber planks shall be #2 grade min., and should be free from large and loose knots.
4. The approach transitions shall be no steeper than 6:1 and constructed as directed by the Engineer.
5. The construction exit foundation course shall be flexible base, bituminous concrete, portland cement concrete or other material as approved by the Engineer.
6. The construction exit should be graded to allow drainage to a sediment trapping device.
7. The guidelines shown hereon are suggestions only and may be modified by the Engineer.

CONSTRUCTION EXIT (TYPE 3)

GENERAL NOTES

1. The length of the type 3 construction exit shall be as shown on the plans, or as directed by the Engineer.
2. The type 3 construction exit may be constructed from open graded crushed stone with a size of two to four inches spread a min. of 4" thick to the limits shown on the plans.
3. The treated timber planks shall be #2 grade min., and should be free from large and loose knots.
4. The guidelines shown hereon are suggestions only and may be modified by the Engineer.

Texas Department of Transportation
Design Division Standard

TEMPORARY EROSION, SEDIMENT AND WATER POLLUTION CONTROL MEASURES

CONSTRUCTION EXITS

EC(3)-93

FILE: ec393.dgn	DN: TxDOT	CK: HEJ	DW: BD	CK:
© TxDOT June 1993	CONT	SECT	JOB	HIGHWAY
REVISIONS	0086	14	066	LOOP 20
	DIST		COUNTY	SHEET NO.
	22		WEBB	363

DATE:
FILE: