CITY OF BROADVIEW HEIGHTS, OHIO

RESOLUTION NO. 2023-99

INTRODUCED BY MAYOR AND ENTIRE COUNCIL

A RESOLUTION AUTHORIZING THE MAYOR TO ENTER INTO AN AGREEMENT BETWEEN THE CITY OF BROADVIEW HEIGHTS AND THE CITY OF NORTH ROYALTON FOR THE INSTALLATION AND MAINTENANCE OF A SANITARY SEWER IN THE CITY OF BROADVIEW HEIGHTS AND DECLARING AN EMERGENCY

WHEREAS, the City Council has determined that it is in the best interest of the City to enter into an agreement between the City of Broadview Heights and the City of North Royalton for the installation and maintenance of a sanitary sewer in the City of Broadview Heights.

NOW, THEREFORE, BE IT RESOLVED BY THE COUNCIL OF THE CITY OF BROADVIEW HEIGHTS, COUNTY OF CUYAHOGA AND STATE OF OHIO:

SECTION 1. The Mayor is hereby and herein authorized to enter into an agreement between the City of Broadview Heights and the City of North Royalton for the installation and maintenance of a sanitary sewer in the City of Broadview Heights as delineated in Exhibit "A" attached hereto and made a part hereof as if fully rewritten.

SECTION 2. This Resolution is hereby declared to be an emergency measure necessary for the immediate preservation of the public health, peace, safety and welfare for the reason stated in the Preamble hereof, and provided it receives the affirmative vote of five (5) or more of the members of Council and signature of the Mayor; otherwise it shall take effect and be in force from and after the earliest period allowed by law.

PASSED: Oct. 2, 2023

ROBERT BOLDT, PRESIDENT OF COUNCIL

DATE FILED WITH MAYOR: Oct. 2, 2023

APPROVED:

SAMUEL J. ALAI, MAYOR

ATTEST:

HELEN DUNLAP, CLERK OF COUNCIL

DATE APPROVED: Oct. 2, 2023

AGREEMENT

This is an agreement between the City of Broadview Heights and the City of North Royalton for the creation and grant of an easement from Broadview Heights as Grantor and North Royalton as Grantee and the maintenance of that sewer in perpetuity.

WHEREAS, the City of North Royalton operates a waste water utility and ancillary sewer support systems, and

WHEREAS, the City of North Royalton is currently engaged in the construction of the Valley Vista Sanitary Sewer Improvement Project, and

WHEREAS, the Valley Vista Project includes the construction of a sewer line, including a force main style sewer, along Perl Court partially in the Broadview Heights Public Right of Way, and

WHEREAS, the City of Broadview Heights is willing to grant to the City of North Royalton the necessary easement to allow for the construction of the sewer line upon the understanding that the City of North Royalton shall assume all responsibility for the maintenance and repair of the sewer in perpetuity.

Now therefore the parties agree as follows:

The City of Broadview Heights gives, grants and conveys to the City of North Royalton an easement as described in Exhibit "A" attached hereto and incorporated by reference herein in the public right of way for the construction and maintenance of a sanitary sewer, including a force main style sewer and authorizes the Mayor to execute any and all instruments necessary to give effect thereto.

This grant of easement is conditioned wholly upon the understanding that the City of North Royalton assumes any and all maintenance of the sewer line in perpetuity including the obligation to restore to its original condition any surface area disturbed for both the creation and maintenance thereof.

In witness whereof the Mayor of the City of Broadview Heights and the Mayor of the City of North Royalton have executed this easement agreement hereinbelow upon the express authority of their respective city councils.

Mayor Samuel J. Alai

Before me and in my presence appeared Samuel J. Alai, Mayor of the City of Broadview Heights

who did acknowledge that he signed this instrument under oath and freely and voluntarily this ___

3RD day of October, 2023.

Helen Dunlap
Notary Public

HELEN DUNLAP
NOTARY PUBLIC, STATE OF OHIO
Cuyahoga County
My Commission Expires 11/3/2024

_____
Mayor Larry Antoskiewicz

Before me and in my presence appeared Larry Antoskiewicz, Mayor of the City of North Royalton who did acknowledge that he signed this instrument under oath and freely and voluntarily this ___ day of _____, 2023.

_____
Notary Public

CITY OF NORTH ROYALTON
VALLEY VISTA PUMP STATION IMPROVEMENTS

COUNTY OF CUYAHOGA
STATE OF OHIO

FEBRUARY 2023

PREPARED FOR:
CITY OF NORTH ROYALTON, OHIO

PREPARED BY:
AVETH ENGINEERING, LTD.
8664 HOLGUIST DRIVE
LEWIS CENTER, OHIO 43035

SURVEY AND CADD SERVICES BY:
EUTHENICS

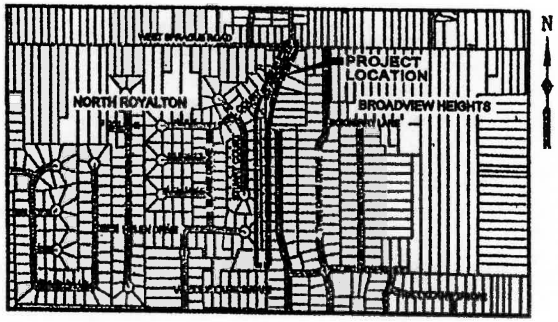

LOCATION MAP
(NTS)

NORTH ROYALTON CITY OFFICIALS

LARRY ANTOSKIEWICZ - MAYOR
MARK A. SMITH - WASTEWATER SUPERINTENDENT

NORTH ROYALTON CITY COUNCIL MEMBERS

PAUL MARNECHECK - PRESIDENT OF COUNCIL
DANA A. SCHROEDER - DIRECTOR OF LEGISLATIVE SERVICES
JOHN NICKELL - WARD 1
LINDA BARATH - WARD 2
JOANNE KNEJICI - WARD 3
JEREMY DIETRICH - WARD 4
DIANE CARBONE-MCDONALD - WARD 5
MIKE WOE - WARD 6

INDEX OF SHEETS

TITLE SHEET 1
GENERAL NOTES 2
PLAN AND PROFILES 3-7
MISCELLANEOUS DETAILS 8-9

APPROVED BY:

MARK A. SMITH, SUPERINTENDENT
NORTH ROYALTON WASTEWATER DEPT.

03-15-23
DATE

PLANS PREPARED BY:

CHEN LIN CHEN, P.E.
REGISTERED ENGINEER NO. 58316

STATE OF OHIO
CHEN LIN CHEN
58316
REGISTERED PROFESSIONAL ENGINEER

03-15-23
DATE

UNDERGROUND UTILITIES
Contact Two Working Days Before You Dig
OHIO811.org
Before You Dig
OHIO811. 8-1-1; or 1-800-362-2764
(Non-members must be called directly)

QUALITY CONTROL
VHS
DESIGN
CLC

TITLE SHEET

CITY OF NORTH ROYALTON
VALLEY VISTA PUMP STATION
IMPROVEMENTS

1

Exhibit "A"

GENERAL NOTES

1. RIGHTS OF WAY: THE CONTRACTOR SHALL OBSERVE AND CONFORM TO THE REQUIREMENTS OF ALL RIGHTS-OF-WAY INCLUDING EASEMENTS, COURT ENTRIES, RIGHTS OF ENTRY OR ACTION FILED IN COURT IN ACCORDANCE WITH THE CODE OF THE APPLICABLE GOVERNING AGENCY. THE COST OF THE OPERATIONS NECESSARY TO FULFILL SUCH REQUIREMENTS SHALL BE INCLUDED IN THE PRICE BID FOR THE CONTRACT. THE CONTRACTOR SHALL CONFINE ALL CONSTRUCTION ACTIVITIES TO THE LIMITS OF WORK AS DEFINED WITHIN THE RIGHTS-OF-WAY AND/OR EASEMENTS. IF THERE IS A COMPELLING NEED TO GO OUTSIDE THE RIGHTS-OF-WAY OR EASEMENTS, THE CONTRACTOR MUST RECEIVE WRITTEN PERMISSION FROM THE PROPERTY OWNERS AND PROVIDE A COPY TO THE CITY.

2. NOTIFICATION: THE CONTRACTOR SHALL NOTIFY THE CITY OF NORTH ROYALTON WASTEWATER DEPARTMENT, SCOTT SHANKERY (440) 237-5010, AT LEASY SEVENTY-TWO (72) HOURS PRIOR TO CONSTRUCTION.

3. PRECONSTRUCTION VIDEO: PRIOR TO MOBILIZATION AT THE SITE, THE CONTRACTOR SHALL PROVIDE A PRECONSTRUCTION, HIGH RESOLUTION, DIGITAL VIDEO SURVEY OF THE PLANNED CONSTRUCTION AREAS, MATERIAL STORAGE AREAS, AREAS ADJACENT TO THESE AREAS, INCLUDING BUT NOT LIMITED TO STREETS, DRIVEWAYS, SIDEWALKS, CURBS, DITCHES, FENCING, MAILBOX, VISIBLE UTILITES, RETAINING STRUCTURES AND ADJACENT BUILDING STRUCTURES. ALL COST FOR THIS WORK SHALL BE INCLUDED IN THE COST FOR MOBILIZATION.

4. CONSTRUCTION LAYOUT STAKES: CONSTRUCTION LAYOUT STAKES SHALL BE PROVIDED BY THE CONTRACTOR.

5. EXTRA COMPENSATION: THE PRICE FOR ITEMS OF WORK OR MATERIALS SHOWN ON THE PLANS OR PROVIDED FOR IN THE SPECIFICATIONS OR SPECIAL PROVISIONS FOR WHICH NO SEPARTE UNIT PRICE IS GIVEN SHALL BE DISTRIBUTED AMONG THE VARIOUS BID ITEMS. SUBMISSION OF A BID SHALL BE CONSIDERED EVIDENCE THAT THE BIDDER IS SATISFIED WITH THE PLANS AND CONDITIONS AS SHOWN. NO ADDITIONAL COMPENSATION WILL BE PAID TO THE CONTRACTOR FOR COMPLIANCE WITH THE PLANS, SPECIFICATIONS, OR SPECIAL PROVISIONS.

6. UNDERGROUND UTILITIES: THE CONTRACTOR SHALL EXPOSE THE EXISTING UNDERGROUND UTILITIES OR STRUCTURES INDICATED ON THE PLANS SUFFICIENTLY IN ADVANCE OF THE FORCE MAIN INSTALLATION IN ORDER TO VERIFY THE PROPOSED LOCATION, ELEVATION, AND MATERIAL TYPE. THE COST SHALL BE DISTRIBUTED AMONG THE BID ITEMS.

7. GAS LINES: WHEN EXCAVATING, THE CONTRACTOR SHALL TAKE EXTRA PRECAUTION TO AVOID DAMAGING GAS LINES AND SUPPORT THEM DURING CONSTRUCTION. THE CONTRACTOR SHALL CONTACT THE GAS COMPANY 48 HOURS PRIOR TO CONDUCTING CONSTRUCTION ACTIVITIES PARALLEL TO OR CROSSING ANY GAS LINES. DEPTH TO THE TOP OF THE PIPE IS ASSUMED TO BE 2-FEET FOR GAS LINES. HOWEVER, DEPTHS MAY VARY.

8. SAWING PAVEMENT: ALL PAVEMENTS AND DRIVES SHALL BE SAW CUT, FULL DEPTH, IN NEAT, STRAIGHT, VERTICAL LINES. CONCRETE PAVEMENT, DRIVES, AND SIDEWALKS SHALL BE SHALL CUT, FULL DEPTH, TO THE NEAREST JOINT. IF THE PAVEMENT, DRIVE OR SIDEWALK IS DAMAGED DURING CONSTRUCTION BEYOND THE ORIGINAL SAW CUT, THE PAVEMENT, DRIVE, AND SIDEWALK SHALL BE RECUT TO NEAT LINES.

9. TRENCHES: ALL TRENCHES SHALL BE BACKFILLED OR SECURELY PLATED DURING NON-WORKING HOURS.

10. SHEETING AND BRACING: THE CONTRACTOR IS SOLELY RESPONSIBLE FOR THE DESIGN, INSTALLATION AND REMOVAL OF ALL SHEETING AND BRACING OR OTHER SYSTEM TO SUPPORT THE TRENCH WALLS. THE SHEETING AND BRACING SYSTEM OR ANY OTHER TRENCH SUPPORT SYSTEM SHALL BE DESIGNED BY AN ENGINEER REGISTERED IN THE STATE OF OHIO TO MINIMIZE THE WIDTH OF THE OPEN TRENCH. THE COST FOR SHEETING AND BRACING SHALL BE DISTRIBUTED AMONG THE BID ITEMS.

11. REMOVAL OF EXISTING FEATURES: ALL SIGNS, FENCES, SHRUBS, DRAINAGE STRUCTURES, CURBS, MAILBOXES, OR OTHER PHYSICAL FEATURES DISTURBED OR DAMAGED DURING WORK UNDER THIS CONSTRACT SHALL BE RESTORED TO THEIR ORIGINAL OR BETTER CONDITION BY THE CONTRACTOR. THE COST OF ALL SUCH WORK SHALL BE INCLUDED IN THE BID FOR THE FORCE MAIN.

12. SEDIMENT AND EROSION CONTROL: ALL SEDIMENT AND EROSION CONTROL MEASURES SHALL BE INSTALLED PRIOR TO ANY MAJOR SOIL DISTURBANCE AND MAINTAINED UNTIL PERMANENT PROTECTION IS ESTABLISHED. ANY DISTURBED AREAS NOT SCHEDULED FOR CONSTRUCTION ACTIVITIES WITHIN THIRTY (30) DAYS OF DISTURBANCE SHALL BE TEMPORARILY STABILIZED AND SEEDED.

13. STORMWATER INLET PROTECTION: ALL STORM SEWER INLETS SHALL BE PROTECTED FROM EXCESSIVE AMOUNTS OF SEDIMENTS USING ADEQUATE FILTERING DEVICES AS APPROVED BY THE OWNER.

14. STORMWATER FLOW: THE FLOW OF ALL DRAINS, SEWERS, CULVERTS, AND WATERCOURSES SHALL BE MAINTAINED AT ALL TIMES BY THE CONTRACTOR. ANY DAMAGE OR DISTURBANCE TO THESE SHALL BE RESTORED BY THE CONTRACTOR TO A CONDITION SATISFACTORY TO THE OWNER. PAYMENT FOR MAINTAINING STORM FLOW SHALL BE INCLUDED IN THE BID FOR THE FORCE MAIN.

15. POLLUTANTS: ALL POLLUTANTS OTHER THAN SEDIMENT THAT OCCUR ON-SITE DURING CONSTRUCTION SHALL BE HANDLED AND DISPOSED OF IN A MANNER THAT DOES NOT CAUSE CONTAMINATION OF STORM OR SURFACE WATERS. POLLUTANTS OF CONCERN INCLUDE, BUT ARE NOT LIMITED TO, FUELS, LUBRICANTS, SOLVENTS, CONCRETE AND CONSTRUCTION MATERIALS.

16. POWER POLES: THE POWER COMPANY MAY REQUIRE TEMPORARY SUPPORT OF POWER POLES ADJACENT TO THE FORCE MAIN TRENCH. CONTRACTOR WILL BE RESPONSIBLE FOR COSTS ASSOCIATED WITH THE TEMPORARY SUPPORT. CONTRACTOR SHALL NOTIFY THE POWER COMPANY SEVENTY-TWO (72) HOURS BEFORE TRENCHING ADJACENT TO POWER POLES.

17. EXISTING VALVES: ALL EXISTING VALVES SHALL BE OPERATED BY OWNER PERSONEL ONLY.

18. TESTING PROCEDURE: ALL FORCE MAINS SHALL BE HYDROSTATICALLY TESTED IN ACCORDANCE WITH THE SPECIFICATIONS. ANY TESTING PERFORMED AGAINST EXISTING VALVES SHALL BE AT THE CONTRACTOR'S RISK. IF SATISFACTORY RESULTS CANNOT BE OBTAINED AGAINST AN EXISTING VALVE, THE NEW LINE SHALL BE DISCONNECTED FROM THE EXISTING VALVE, PLUGGED, AND RETESTED. DISCONNECTION FROM THE EXISTING LINE AND ANY REPAIRS NECESSARY BECAUSE OF DAMAGE CAUSED TO THE EXISTING LINE OR VALVES SHALL BE AT THE CONTRACTOR'S EXPENSE.

19. ACCESS: THE CONTRACTOR SHALL MAINTAIN PEDESTRIAN, LOCAL ROADWAY, AND DRIVEWAY ACCESS AT ALL TIMES. CLOSING OFF OF CLEAR ACCESS TO ANY PUBLIC ALLEY, STREET, ROAD, AVENUE OR BOULEVARD MAY NOT OCCUR WITHOUT THE PRIOR CONSENT OF MUNICIPAL OFFICIALS.

20. TRAFFIC CONTROL: DISRUPTION OF NORMAL TRAFFIC FLOW IS ONLY PERMITTED DURING WORK HOURS. ONE LANE OF TRAFFIC MUST BE MAINTAINED ON ALL ROADS AT ALL TIMES DURING THE PROJECT. THIS INCLUDES, BUT NOT LIMITED TO, WEST SPRAGUE ROAD. LANE CLOSURES ALONG WEST SPRAGUE ROAD MUST BE COORDINATED WITH THE CITY OF BROADVIEW HEIGHTS.

THE CONTRACTOR SHALL SUBMIT A PROPOSED MAINTENANCE AND PROTECTION OF TRAFFIC PLAN TO THE OWNER. APPROVAL OF SUCH PLAN SHALL BE OBTAINED PRIOR TO IMPLEMENTATION.

TRAFFIC CONTROL SHALL BE FURNISHED, ERECTED, MAINTAINED, AND REMOVED BY THE CONTRACTOR ACCORDING TO THE OHIO MANUAL OF UNIFORM TRAFFIC CONTROL DEVICES (OMUTCD), CURRENT EDITION.

21. EMERGENCY VEHICLES: ACCESS MUST BE MAINTAINED FOR EMERGENCY VEHICLES AT ALL TIMES.

22. MUD: TRACKING OR SPILLING OF MUD, DIRT, OR DEBRIS ON CITY STREETS OR SIDEWALKS IS PROHIBITED AND SHALL BE CLEANED UP IMMEDIATELY BY THE CONTRACTOR. PAYMENT FOR CLEANING SHALL BE DISTRIBUTED AMONG THE BID ITEMS.

23. CLEARING AND GRUBBING: THE CONTRACTOR SHALL INCLUDE ALL NECESSARY PRECAUTIONS TO PROTECT AND SAVE ALL TREES WHICH ARE ADJACENT TO THE LINE OF WORK AND SHALL REMOVE ONLY THOSE TREES WHICH ARE DESIGNATED FOR REMOVAL ON THE PLANS. TREE ROOTS AND OVERHANGING BRANCHES SHALL BE CUT WHEN REQUIRED. THE CUTTING OF ROOTS AND BRANCHES SHALL BE DONE IN A MANNER TO LEAVE A SMOOTH END WITHOUT SPLITTING OR CRUSHING. THE CUT END SHALL BE NEATLY TRIMMED. ALL DAMAGE SHALL BE REPAIRED BY THE CONTRACTOR AT HIS EXPENSE.

24. NON-RUBBER TIRED VEHICLES: NO NON-RUBBER TIRED VEHICLES WILL BE PERMITTED ON CITY STREETS UNLESS PRIOR APPROVAL IS OBTAINED BY THE CITY. THE CONTRACTOR MUST PROTECT THE CITY STREET FROM ANY DAMAGE RESULTING FROM THE USE OF NON-RUBBER TIRES AND RESULTING DAMAGE MUST BE REPAIRED TO THE SATISFACTION OF THE CITY.

25. ROOF DRAINS, FOUNDATIONS DRAINS, AND OTHER CLEAN WATER CONNECTIONS TO THE SANITARY SEWER ARE PROHIBITED.

26. THE PIPE INSTALLED UNDER THIS CONTRACT GENERALLY CONSISTS OF:

A. 2,200 LINEAR FEET OF 12-INCH HDPE FORCE MAIN VIA TRENCHLESS METHODS.
B. 280 LINEAR FEET OF 12-INCH HDPE FORCE MAIN VIA OPEN CUT METHODS.
C. 75 LINEAR FEET OF 6-INCH, 8-INCH, 10-INCH, AND 12-INCH DIP VIA OPEN CUT METHODS.

ABBREVIATIONS:

CL	CENTERLINE
DIP	DUCTILE IRON PIPE
EL	ELEVATION
ELEV	ELEVATION
EX	EXISTING
EX U	EXISTING UTILITY EASEMENT
FL	FLOW LINE
FLG	FLANGE
HDPE	HIGH DENSITY POLYETHYLENE
INV	INVERT
MIN	MINIMUM
MJ	MECHANICAL JOINT
NTP	NATIONAL PIPE THREAD
PE	PLAIN END
PL	PROPERTY LINE
PROP	PROPOSED
PVC	POLYVINYL CHLORIDE
PVI	POINT OF VERTICLE INTERSECTION
RCP	REINFORCED CONCRETE PIPE
R/W	RIGHT OF WAY
SAN	SANITARY
SCH	SCHEDULE
ST	STORM SEWER
STA	STATION
SS	STAINLESS STEEL
T/C	TOP OF CASTING
TYP	TYPICAL
VCP	VITRIFIED CLAY PIPE
WAT	WATER LINE

LEGEND:

—Ex R/W—	- EXISTING RIGHT OF WAY
—Ex U—	- EXISTING EASEMENT
— — — —E—	- EXISTING ELECTRIC
— — — —T—	- EXISTING BURIED TELECOM
----------	- EXISTING STORM SEWER
— — — —SAN—	- EXISTING SANITARY SEWER
— — — —W—	- EXISTING WATER LINE
— — — —G—	- EXISTING GAS LINE
—X—	- EXISTING FENCE
—1150—	- EXISTING CONTOUR
	- EXISTING TELEPHONE POLE
	- EXISTING POWER POLE
	- EXISTING POWER/TELEPHONE POLE
	- EXISTING ELECTRIC BOX
	- EXISTING TELEPHONE BOX
	- EXISTING UTILITY VALVE
	- EXISTING WATER VALVE
	- EXISTING FIRE HYDRANT
	- EXISTING SANITARY MANHOLE
	- EXISTING CLEANOUT
	- EXISTING STORM MANHOLE
	- EXISTING STORM INLET
	- EXISTING ROCKS
	- EXISTING BOLLARD
	- EXISTING SIGN
	- EXISTING MAILBOX
	- EXISTING TREE

GENERAL NOTES

CITY OF NORTH ROYALTON
VALLEY VISTA PUMP STATION IMPROVEMENTS

2 of 9

F:\Jobs\1337-Port Court, Parsonsfd, Survey\Plan Development\Design\Roadway\Sheets\1337_GN001.dwg 08-Feb-23 11:13 AM

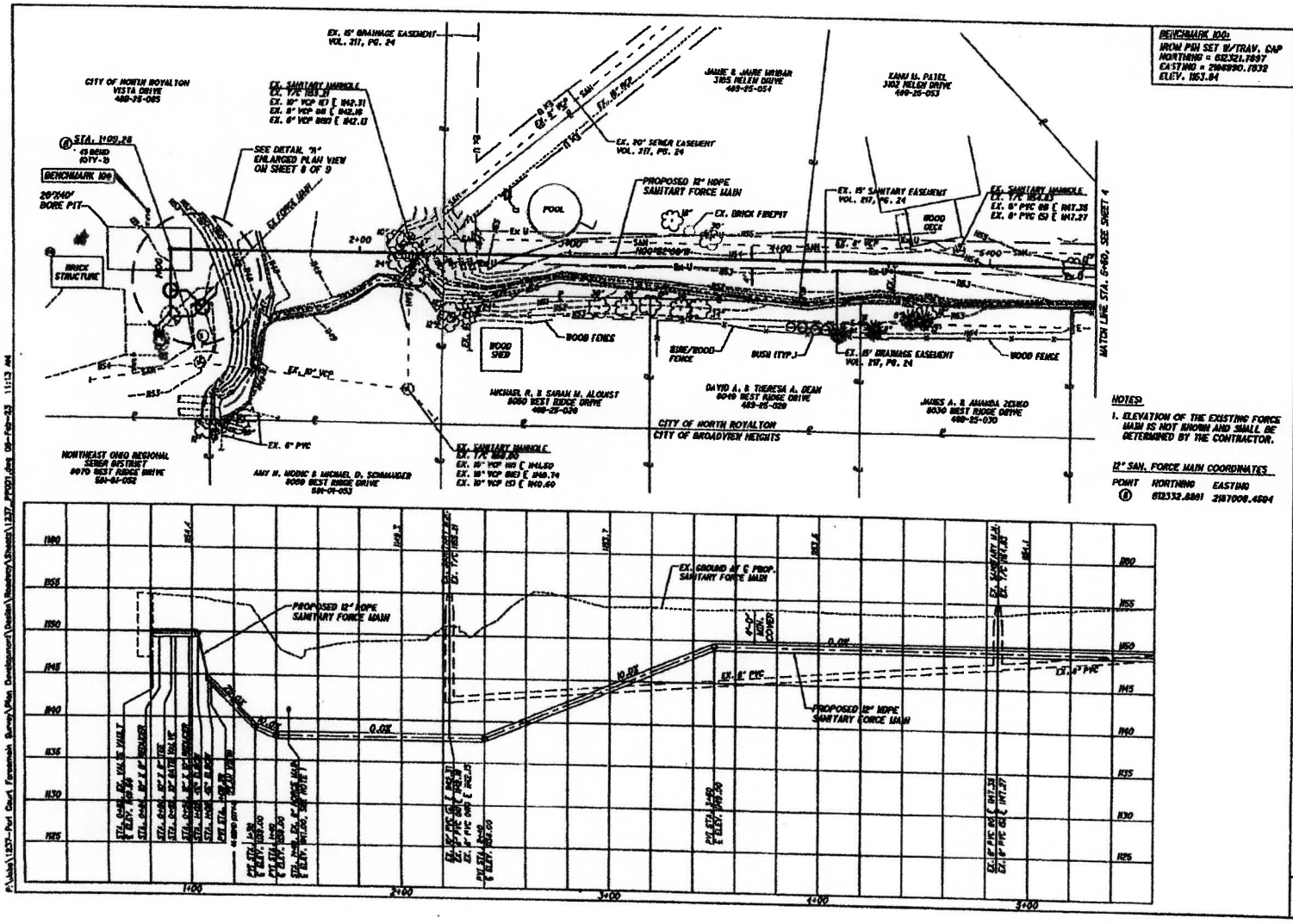

BENCHMARK 100:
IRON PIN SET W/TRAV. CAP
NORTHING = 612321.7897
EASTING = 2186990.1032
ELEV. 1163.84

NOTES:

1. ELEVATION OF THE EXISTING FORCE MAIN IS NOT KNOWN AND SHALL BE DETERMINED BY THE CONTRACTOR.

12" SAN. FORCE MAIN COORDINATES

POINT	NORTHING	EASTING
8	612552.8861	2187008.4594

NORTH
HORIZONTAL SCALE IN FEET

CALCULATED VMB
DRAWN CLC

PLAN AND PROFILE
STA. 1+00.00 TO STA. 5+50.00

CITY OF NORTH ROYALTON
VALLEY VISTA PUMP STATION IMPROVEMENTS

9 OF 14

P:\Jobs\1237-Port Oak Foreswah Survey\Plan Development\Design\Residency\Sheets\1237_PROD1.dwg 09-Feb-23 11:13 AM

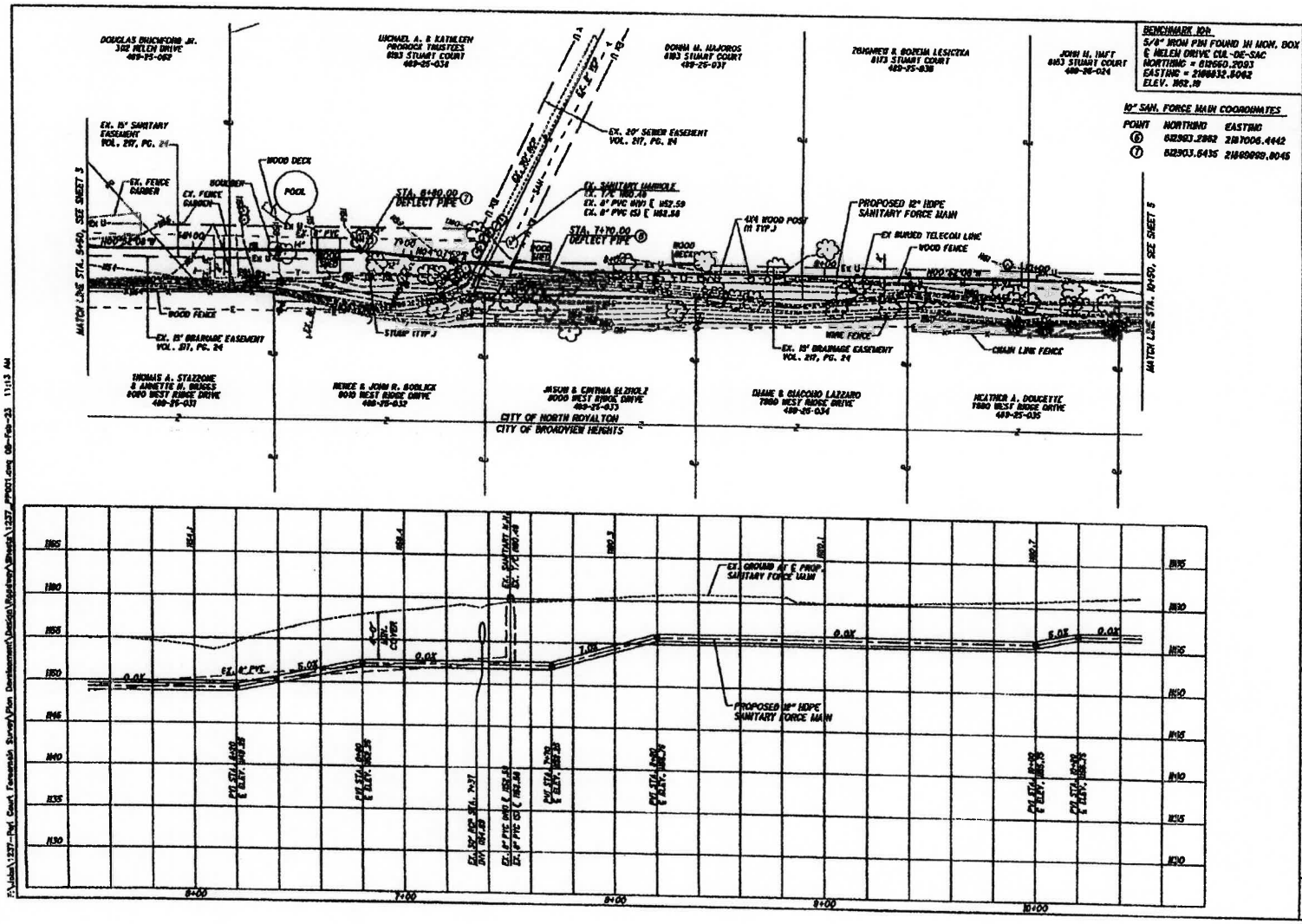
BENCHMARK #24
5/8" IRON PIN FOUND IN MON. BOX
@ HELEN DRIVE CUL-DE-SAC
NORTHING = 612660.2093
EASTING = 2188832.8062
ELEV. 1862.19
10" SAN. FORCE MAIN COORDINATES
POINT NORTHING EASTING
6 612903.2962 2187006.4442
7 612903.6435 2186898.8045
DOUGLAS BUCKFORD JR.
382 HELEN DRIVE
489-25-062
MICHAEL A. & KATHLEEN PRODOCE TRUSTEES
8193 STUART COURT
489-25-034
DONNA M. MAJOROS
8183 STUART COURT
489-25-037
ZBIGNIEW & BOZENA LESICZKA
8173 STUART COURT
489-25-038
JOHN H. HAFT
8163 STUART COURT
489-25-024
EX. 15' SANITARY EASEMENT VOL. 217, PG. 24
EX. FENCE GARDEN
BOULDER
WOOD DECK
POOL
STA. 6+90.00 DEFLECT PIPE
EX. 20' SEWER EASEMENT VOL. 217, PG. 24
EX. SANITARY MANHOLE
STA. 7+70.00 DEFLECT PIPE
4X4 WOOD POST IN TYP.J
PROPOSED 12" HDPE SANITARY FORCE MAIN
EX BURIED TELECOM LINE
WOOD FENCE
MATCH LINE STA. 5+50, SEE SHEET 5
MATCH LINE STA. 10+50, SEE SHEET 5
EX. 15' DRAINAGE EASEMENT VOL. 81, PG. 24
STUMP TYP.J
WIRE FENCE
EX. 15' DRAINAGE EASEMENT VOL. 217, PG. 24
CHAIN LINK FENCE
THOMAS A. STAZZONE & ANNETTE M. BRUGES
8080 WEST RIDGE DRIVE
489-25-033
NEVEE & JOHN R. BOBLICK
8010 WEST RIDGE DRIVE
489-25-032
JASON & CINTHIA ELZHOLZ
8000 WEST RIDGE DRIVE
489-25-033
DIANE & GIACOMO LAZZARO
7980 WEST RIDGE DRIVE
489-25-034
HEATHER A. DOUCETTE
7980 WEST RIDGE DRIVE
489-25-035
CITY OF NORTH ROYALTON
CITY OF BROADVIEW HEIGHTS
EX. GROUND AT E PROP. SANITARY FORCE MAIN
PROPOSED 18" HDPE SANITARY FORCE MAIN
EX. 4" PVC
MIN. COVER
0.0%
5.0%
7.0%
6+00
7+00
8+00
9+00
10+00
HORIZONTAL SCALE IN FEET
CHECKED YMB
DRAWN CLC
PLAN AND PROFILE
STA. 5+50.00 TO STA. 10+50.00
CITY OF NORTH ROYALTON
VALLEY VISTA PUMP STATION IMPROVEMENTS
9
F:\Jobs\1237-Pat Court Tenanah Survey\Plan Development\Design\Roadway\Sheets\1237_PROD1.dwg 08-Feb-23 11:13 AM

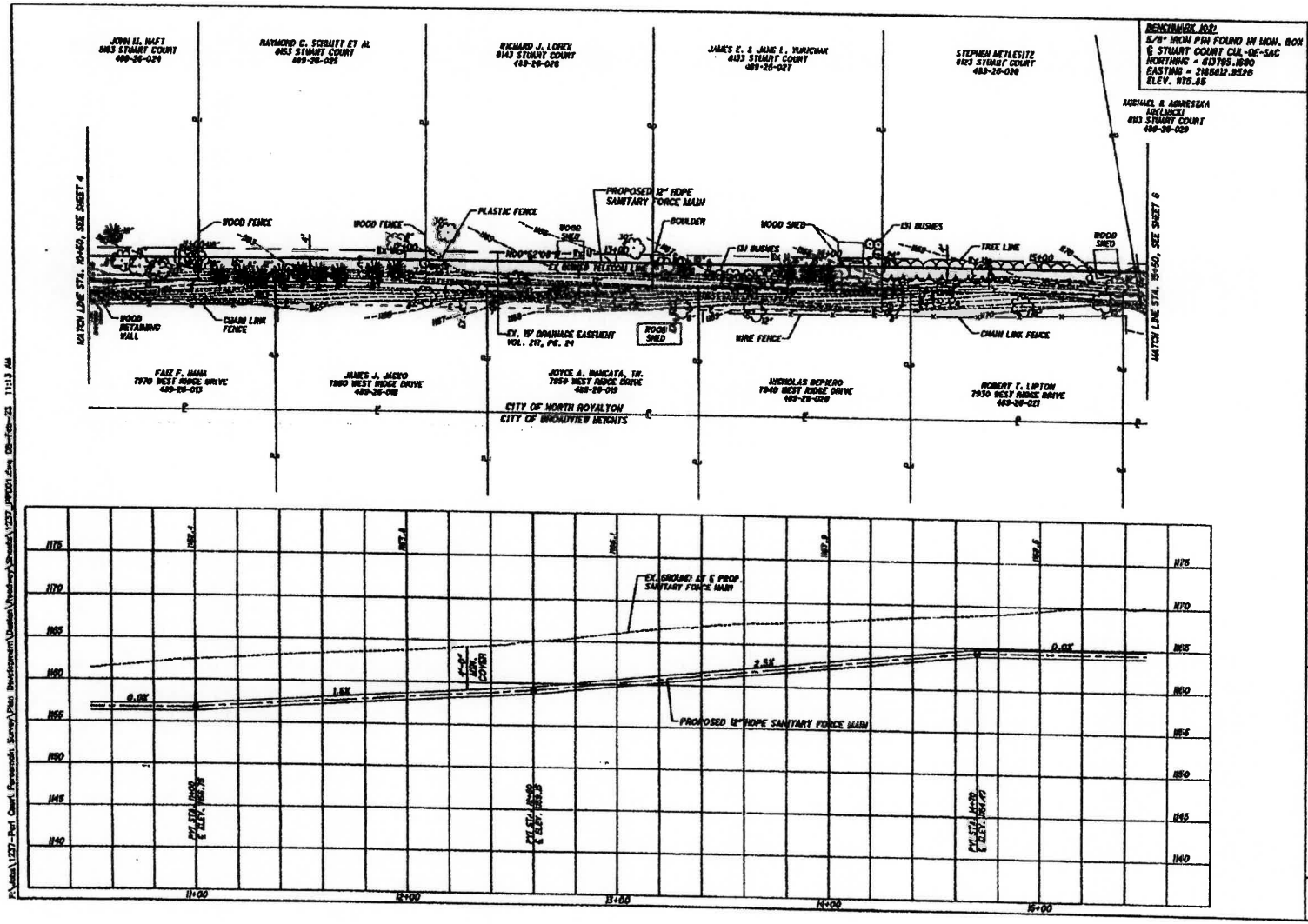
BENCHMARK 1082:
5/8" IRON PIN FOUND IN IRON. BOX
℄ STUART COURT CUL-DE-SAC
NORTHING = 613795.1690
EASTING = 2165612.9526
ELEV. 1175.85
JOHN H. HAFT
8663 STUART COURT
409-26-024
RAYMOND C. SCHMITT ET AL
8653 STUART COURT
409-26-025
RICHARD J. LORICK
8643 STUART COURT
409-26-026
JAMES E. & JANE L. YURICHAK
8633 STUART COURT
409-26-027
STEPHEN METLESITZ
8623 STUART COURT
409-26-028
MICHAEL & AGNIESZKA ADELUNCKI
8613 STUART COURT
409-26-029
MATCH LINE STA. 10+50, SEE SHEET 4
MATCH LINE STA. 15+50, SEE SHEET 6
WOOD FENCE
WOOD FENCE
PLASTIC FENCE
WOOD SHED
PROPOSED 12" HDPE SANITARY FORCE MAIN
BOULDER
WOOD SHED
(3) BUSHES
(3) BUSHES
TREE LINE
WOOD SHED
WOOD RETAINING WALL
CHAIN LINK FENCE
EX. 15' DRAINAGE EASEMENT VOL. 217, PG. 24
WOOD SHED
WIRE FENCE
CHAIN LINK FENCE
FAIS F. MAH
7970 WEST RIDGE DRIVE
409-26-013
JAMES J. JACKO
7960 WEST RIDGE DRIVE
409-26-018
JOYCE A. BIANCATA, TR.
7950 WEST RIDGE DRIVE
409-26-019
NICHOLAS BEMERO
7940 WEST RIDGE DRIVE
409-26-020
ROBERT F. LIPTON
7930 WEST RIDGE DRIVE
409-26-021
CITY OF NORTH ROYALTON
CITY OF BROADVIEW HEIGHTS
EX. GROUND AT ℄ PROP. SANITARY FORCE MAIN
0.0%
1.5%
2.5%
0.0%
4'-0" MIN. COVER
PROPOSED 12" HDPE SANITARY FORCE MAIN
PVI STA. 11+00 ℄ ELEV. 1161.75
PVI STA. 13+00 ℄ ELEV. 1163.15
PVI STA. 14+70 ℄ ELEV. 1164.40
1175
1170
1165
1160
1155
1150
1145
1140
11+00
12+00
13+00
14+00
15+00
N
HORIZONTAL SCALE IN FEET
CALCULATED WMB
DRAWN CLC
CITY OF NORTH ROYALTON
VALLEY VISTA PUMP STATION
IMPROVEMENTS
PLAN AND PROFILE
STA. 10+50.00 TO STA. 15+50.00

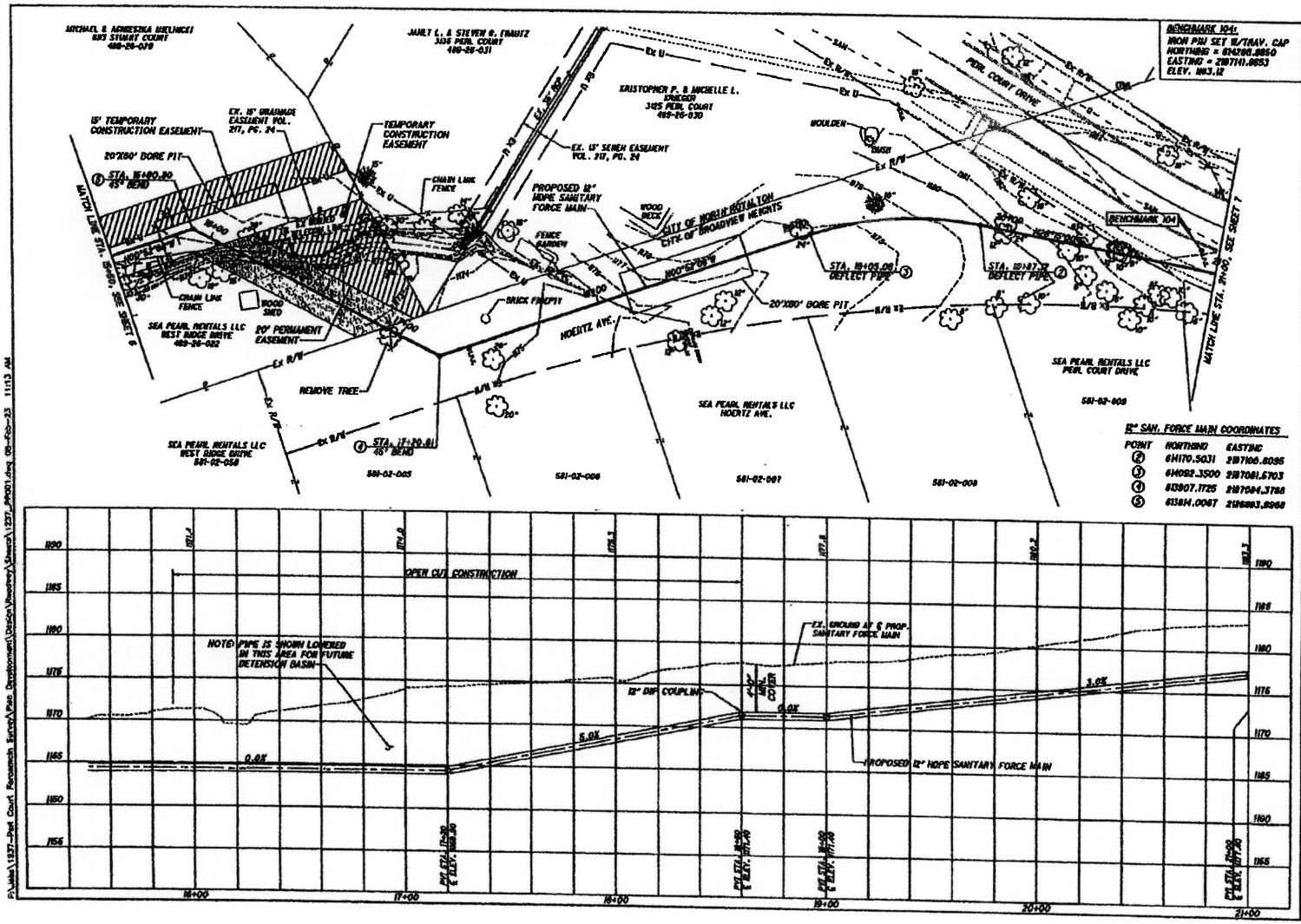
BENCHMARK 104:
NION PIN SET W/TRAV. CAP
NORTHING = 614298.8850
EASTING = 2187141.8653
ELEV. 1143.12
MICHAEL & MONIESKA MELNICKI
6113 SUMMIT COURT
489-28-079
JANET L. & STEVEN G. FRANTZ
3135 PERL COURT
489-26-031
KRISTOPHER P. & MICHELLE L. IONESCU
3125 PERL COURT
489-26-030
15' TEMPORARY CONSTRUCTION EASEMENT
EX. 15' DRAINAGE EASEMENT VOL. 217, PG. 24
TEMPORARY CONSTRUCTION EASEMENT
20'X60' BORE PIT
STA. 15+80.80 45° BEND
MATCH LINE STA. 15+00, SEE SHEET 6
CHAIN LINK FENCE
WOOD SHED
SEA PEARL RENTALS LLC
WEST RIDGE DRIVE
489-26-032
20' PERMANENT EASEMENT
REMOVE TREE
SEA PEARL RENTALS LLC
WEST RIDGE DRIVE
581-02-058
STA. 17+20.81 45° BEND
581-02-005
EX. 15' SEWER EASEMENT VOL. 217, PG. 24
PROPOSED 12" HDPE SANITARY FORCE MAIN
WOOD DECK
FENCE GARDEN
BRICK FIREPIT
CITY OF NORTH ROYALTON
CITY OF BROADVIEW HEIGHTS
HOERTZ AVE.
581-02-006
SEA PEARL RENTALS LLC
HOERTZ AVE.
581-02-007
20'X80' BORE PIT
STA. 19+05.08 DEFLECT PIPE
STA. 19+47.72 DEFLECT PIPE
581-02-008
PERL COURT DRIVE
BENCHMARK 104
MATCH LINE STA. 21+00, SEE SHEET 7
SEA PEARL RENTALS LLC
PERL COURT DRIVE
581-02-009
12" SAN. FORCE MAIN COORDINATES
POINT NORTHING EASTING
2 614170.5031 2187166.8095
3 614082.3500 2187081.5703
4 613907.1725 2187084.3788
5 613814.0067 2186883.8968
OPEN CUT CONSTRUCTION
NOTE: PIPE IS SHOWN LOWERED IN THIS AREA FOR FUTURE DETENTION BASIN
EX. GROUND AT ℄ PROP. SANITARY FORCE MAIN
12" DIP COUPLING
4'-0" MIN. COVER
0.0%
5.0%
3.0%
PROPOSED 12" HDPE SANITARY FORCE MAIN
PVI STA. 17+30 ℄ ELEV. 1168.30
PVI STA. 18+30 ℄ ELEV. 1171.40
PVI STA. 19+30 ℄ ELEV. 1171.20
PVI STA. 20+00 ℄ ELEV. 1167.20
16+00
17+00
18+00
19+00
20+00
21+00
1190
1185
1180
1175
1170
1165
1160
1155
HORIZONTAL SCALE IN FEET
CHECKED BY VMS
DRAWN BY CLC
PLAN AND PROFILE
STA. 15+50.00 TO STA. 21+00.00
CITY OF NORTH ROYALTON
VALLEY VISTA PUMP STATION IMPROVEMENTS
6
9
F:\Jobs\1237-Perl Court Pumpstation Survey\Plan Development\Design\Phasing\Sheets\1237_PP001.dwg 08-Feb-23 11:13 AM

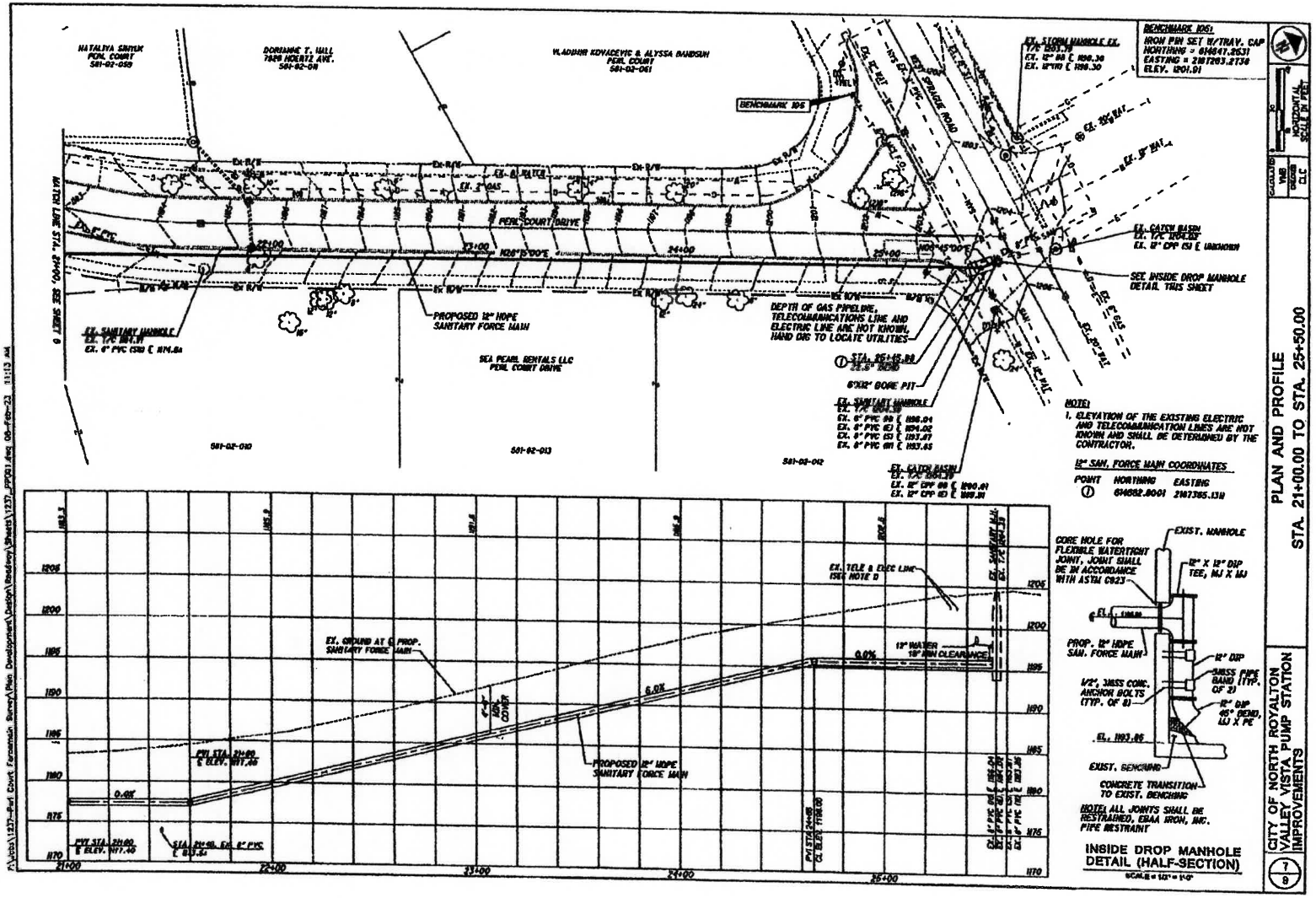
NATALIYA SMYUK
PEARL COURT
501-02-059
DORIANNE T. HALL
7829 HOERTZ AVE.
501-02-011
VLADIMIR KOVACEVIC & ALYSSA BANDSUN
PEARL COURT
501-02-061
BENCHMARK 106
EX. STORM MANHOLE EX.
T/C 1203.38
EX. 12" RCP @ (1198.30
EX. 12"VTP @ (1198.30
BENCHMARK 106:
IRON PIN SET W/TRAV. CAP
NORTHING = 614641.2631
EASTING = 2187203.2734
ELEV. 1201.01
EX. 2" GAS
PEARL COURT DRIVE
EX. CATCH BASIN
EX. T/C 1204.33
EX. 12" CPP (S) @ UNKNOWN
SEE INSIDE DROP MANHOLE
DETAIL THIS SHEET
EX. SANITARY MANHOLE
EX. T/C 1201.18
EX. 8" PVC (S) @ 1194.01
PROPOSED 12" HDPE
SANITARY FORCE MAIN
DEPTH OF GAS PIPELINE,
TELECOMMUNICATIONS LINE AND
ELECTRIC LINE ARE NOT KNOWN,
HAND DIG TO LOCATE UTILITIES
SEA PEARL RENTALS LLC
PEARL COURT DRIVE
STA. 25+45.00
25.5" DEEP
6'X12' BORE PIT
EX. SANITARY MANHOLE
EX. T/C 1201.18
EX. 8" PVC (W) @ 1198.04
EX. 8" PVC (E) @ 1194.02
EX. 8" PVC (S) @ 1193.87
EX. 8" PVC (N) @ 1193.85
501-02-010
501-02-013
501-02-042
EX. CATCH BASIN
EX. T/C 1204.33
EX. 12" CPP (W) @ 1198.81
EX. 12" CPP (E) @ 1198.81
NOTE:
1. ELEVATION OF THE EXISTING ELECTRIC AND TELECOMMUNICATION LINES ARE NOT KNOWN AND SHALL BE DETERMINED BY THE CONTRACTOR.
12" SAN. FORCE MAIN COORDINATES
POINT NORTHING EASTING
1 614582.8001 2187385.1318
EX. GROUND AT ℄ PROP. SANITARY FORCE MAIN
EX. TELE & ELEC LINE (SEE NOTE 1)
12" WATER
18" MIN CLEARANCE
0.0%
6.0%
0.0%
PROPOSED 12" HDPE SANITARY FORCE MAIN
PVT STA. 21+00
℄ ELEV. 1197.40
PVT STA. 21+00
℄ ELEV. 1197.40
STA. 21+45, EX. 8" PVC
℄ 1193.34
PVT STA. 24+45
CL ELEV. 1198.00
21+00
22+00
23+00
24+00
25+00
1205
1200
1195
1190
1185
1180
1175
1170
CORE HOLE FOR FLEXIBLE WATERTIGHT JOINT, JOINT SHALL BE IN ACCORDANCE WITH ASTM C923
EXIST. MANHOLE
12" X 12" DIP TEE, MJ X MJ
PROP. 12" HDPE SAN. FORCE MAIN
12" DIP
SWISS PIPE BAND (TYP. OF 2)
1/2", SWISS CONC. ANCHOR BOLTS (TYP. OF 8)
12" DIP 45° BEND, MJ X PE
EL. 1193.85
EXIST. BENCHING
CONCRETE TRANSITION TO EXIST. BENCHING
NOTE: ALL JOINTS SHALL BE RESTRAINED, EBAA IRON, INC. PIPE RESTRAINT
INSIDE DROP MANHOLE DETAIL (HALF-SECTION)
SCALE = 1/2" = 1'-0"
NORTHCOUNTY
SCALE IN FEET
CALCULATED VMB
DRAWN CLC
PLAN AND PROFILE
STA. 21+00.00 TO STA. 25+50.00
CITY OF NORTH ROYALTON
VALLEY VISTA PUMP STATION
IMPROVEMENTS
7
8
Z:\Jobs\1237-Perl Court Forcemain Survey\Plan Development\Design\Roadway\Sheets\1237_PP01.dwg 08-Feb-23 11:13 AM

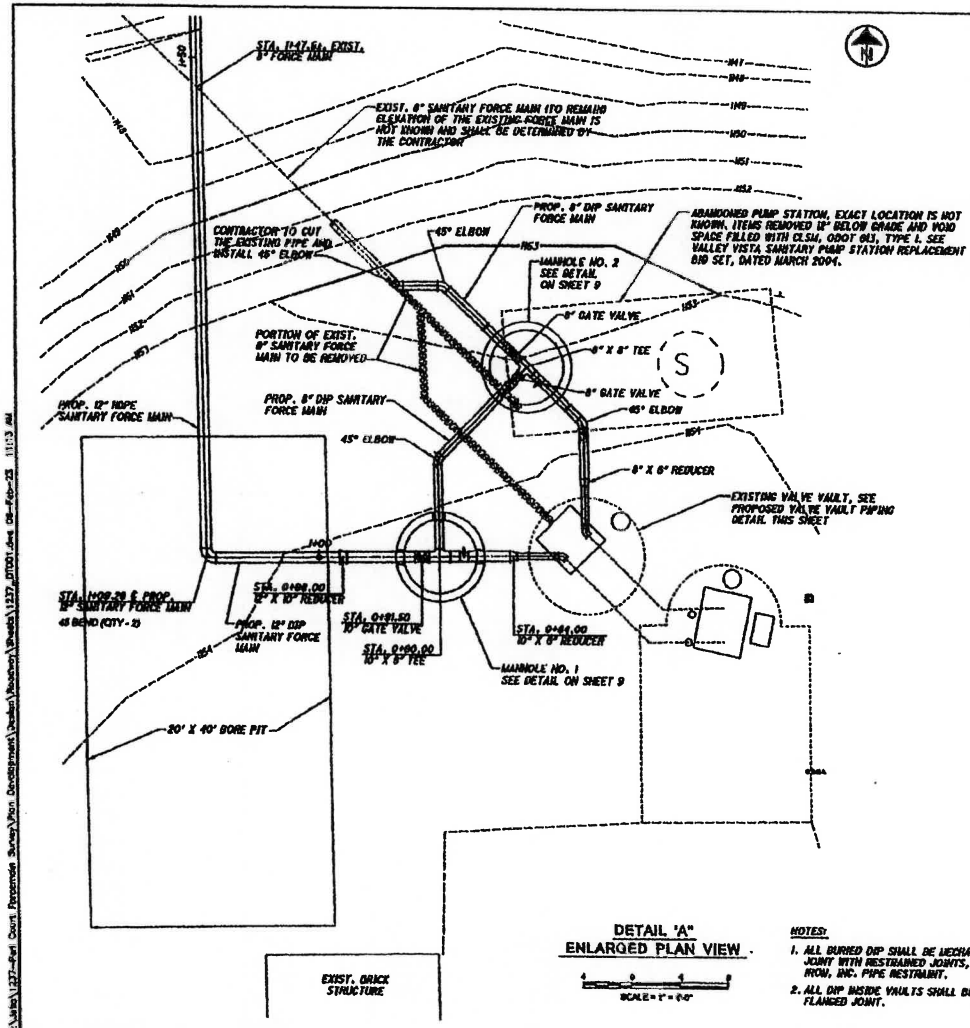

DETAIL "A"
ENLARGED PLAN VIEW

SCALE = 1" = 8'-0"

NOTES:

1. ALL BURIED DIP SHALL BE MECHANICAL JOINT WITH RESTRAINED JOINTS, EBAA IRON, INC. PIPE RESTRAINT.
2. ALL DIP INSIDE VAULTS SHALL BE FLANGED JOINT.

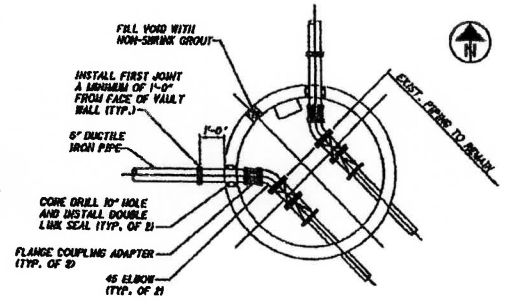

PROPOSED VALVE VAULT PIPING

SCALE = 1/2" = 1'-0"

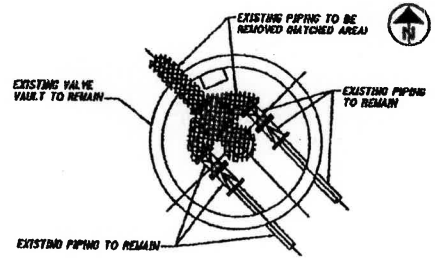

EXISTING VALVE VAULT PIPING
DEMOLITION DETAIL

SCALE = 1/2" = 1'-0"

MISCELLANEOUS DETAILS

CITY OF NORTH ROYALTON
VALLEY VISTA PUMP STATION IMPROVEMENTS

CALCULATED VMS
DRAWN CLC

F:\Valley\1237-Fort Court Personnel Survey\Plan Development\Section\Sheets\1237_DT001.dwg 06-Feb-23 11:13 AM

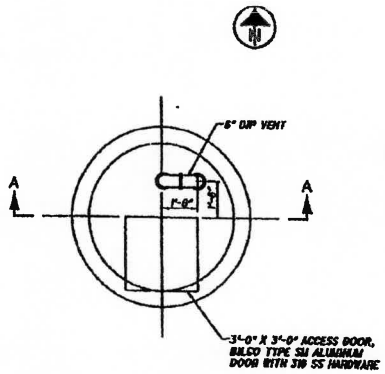

UPPER PLAN

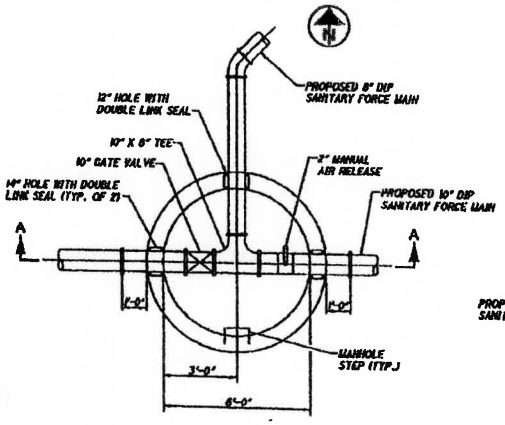

LOWER PLAN

MANHOLE NO. 1

SCALE = 1/2" = 1'-0"

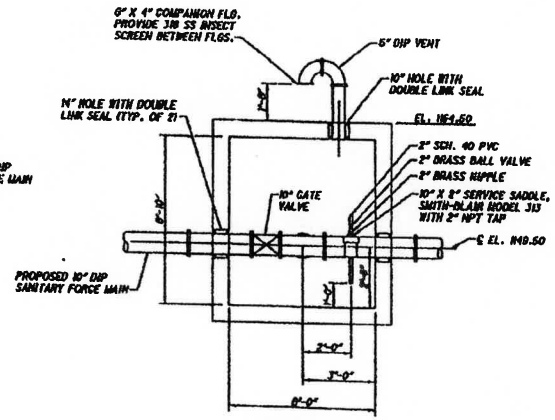

SECTION A-A

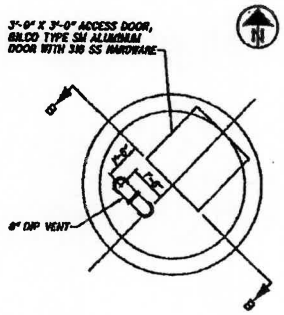

UPPER PLAN

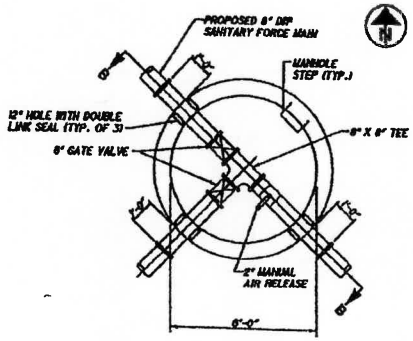

LOWER PLAN

MANHOLE NO. 2

SCALE = 1/2" = 1'-0"

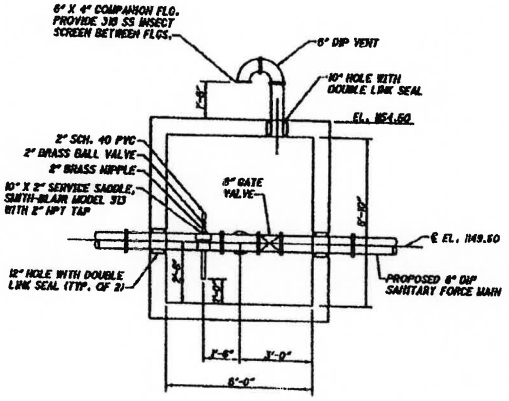

SECTION B-B

1/2 0 1/2

SCALE = 1/2" = 1'-0"

MISCELLANEOUS DETAILS

CITY OF NORTH ROYALTON
VALLEY VISTA PUMP STATION IMPROVEMENTS

9 / 9

F:\Jobs\1237-Pol Court Forcemain Survey\Plan Development\Design\Redcrey\Sheets\1237_DT001.dwg 08-Feb-23 11:13 AM