RECEIVED
CITY OF NORTH ROYALTON
FEB 05 2024
☑ P.C. ☐ B.Z.A

# City of North Royalton

Mayor Larry Antoskiewicz

Community Development, Building Division
Dan Kulchytsky, Building Commissioner
11545 Royalton Road, North Royalton, OH 44133

Phone: 440-582-3000

## CITY OF NORTH ROYALTON PLANNING COMMISSION APPLICATION

**1. This request is made for the following property:**

| | |
|---|---|
| Vacant Acreage off Sprague Road | |
| Address | Name of Occupant, Business or Tenant (if applicable) |
| 489-02-033 | R1-A, Ward 1 |
| Permanent Parcel Number | Zoning District and Ward |

**2. Property Owner of Parcel:**

| | |
|---|---|
| FLG Woodland Bend LLC | FLG Woodland Bend LLC |
| Name | Name of Business (if applicable) |
| 25700 Science Park Drive, Suite 360 | 216-342-4348x102 |
| Address | Phone |
| Beachwood OH 44122 | jrosen@frontierlg.com |
| City, State and Postal Code | |

**3. This request is being made by the following responsible party (Owner / Authorized Representative):**

| | |
|---|---|
| Mark Holz | Frontier Land Group |
| Name | Name of Business (if applicable) |
| 25700 Science Park Drive, Suite 360 | 216-342-4348 x 102 |
| Address | Phone |
| Cleveland, OH 44122 | jrosen@frontierlg.com |
| City, State and Postal Code | Email (electronic mail) |

**For Office Use Only**

| | | |
|---|---|---|
| 02/05/24 | 03/06/2024 | PC24-04 |
| Date Application Submitted | Meeting Date Assigned | Identification Number Assigned |
| $500.00 | Check # 14496 | IR |
| Application Fee | Payment Information (date, check number, cash, etc.) | Application Fee Received By |

Other Application Fee Information

## CITY OF NORTH ROYALTON PLANNING COMMISSION APPLICATION

**4. Narrative statement describing the project and its features:**

Our goal is to develop a fee-simple single-family detached cluster development consisting of 20 sublots. This will be a for-sale community. Our intention is to situate the development in the Northeast portion of the property as to preserve as much of the natural environmental factors exisiting on-site as possible. The balance of the site will be conserved as open-space.

**5. Applicant's Plan Request:** (please mark appropriate box)

Commercial / Industrial / Residential:

- ☐ Preliminary Site Plan Approval
- ☐ Final Site Plan Approval

Subdivision:

- ☐ Sketch Plan Approval
- Preliminary Site Plan Approval
- ☒ Final Site / Preliminary Plat Approval
- ☐ Final Plat / Dedication Approval

The Planning Commission or its agent(s) is hereby authorized to enter upon the property for which his approval is sought, without further notification, to inspect said property. Any such inspection shall be conducted between the hours of 9 a.m. and 5 p.m. on any day of the week, including weekends.

I further understand that any misrepresentation of data or facts or violations of the Ordinances of the City of North Royalton are cause for refusal, suspension or revocation of this license if issued.

| | | |
|---|---|---|
| | Mark Holz, Managing Member | 02/05/2024 |
| Applicant Signature | Printed Name and Title | Date |
| | Mark Holz, Managing Member | 02/05/2024 |
| Owner Signature | Printed Name and Title | Date |

**WRITTEN ACTION OF**
**THE SOLE MANAGER OF**
**FLG WOODLAND BEND LLC**

**February 7, 2024**

The undersigned is the sole manager ("Manager") of FLG Woodland Bend LLC, an Ohio limited liability company ("Company"). The Manager desires to take the following actions and adopt the following resolutions by their written consent:

WHEREAS, Company is the owner of real property commonly known as 8217 Ridgedale Drive, North Royalton, Ohio (the "Property").

WHEREAS, Manager deems it to be in the best interests of the Company to develop the Property for single family homes.

NOW, THEREFORE, BE IT RESOLVED, Mark Holz in his capacity as Manager of the Company is hereby authorized on behalf of each Company to take all actions necessary or appropriate to develop the Property, including, without limitation, to enter into contracts with parties completing construction, to obtain insurance and performance bonds, to apply for and obtain permits for the construction, to enter into agreements with governmental authorities and utilities, to open checking accounts, commercial accounts, payroll accounts, fund transfer authorizations, savings accounts and other depository arrangements with one or more financial institutions for the funds of the Company and to take such other action with respect to said arrangements as may be necessary or appropriate.

FURTHER RESOLVED, that all acts and deeds heretofore performed by Manager for and on behalf of the Company in carrying out the terms and intentions of these resolutions, are hereby ratified, approved and confirmed.

FURTHER RESOLVED, that this instrument may be executed in one or more counterparts, each of which shall be deemed an original and all of which together shall constitute a single document.

[SIGNATURE PAGE FOLLOWS]

**IN WITNESS WHEREOF**, the undersigned have duly executed this Written Consent as of the date first above written.

Mark Holz, Manager

# Cuyahoga County GIS Viewer

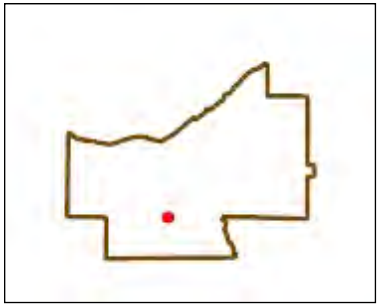

Date Created: 2/16/2024

Legend

- Municipalities
- Right Of Way
- Platted Centerline
- Parcel

564 0 282 564 Feet

Projection:
WGS_1984_Web_Mercator_Auxiliary_Sphere

This map is a user generated static output from an Internet mapping site and is for reference only. Data layers that appear on this map may or may not be accurate, current, or otherwise reliable.
THIS MAP IS NOT TO BE USED FOR NAVIGATION

Cuyahoga County
Enterprise GIS
PUTTING CUYAHOGA COUNTY ON THE MAP

# IMPROVEMENT PLANS & SWP3
## FOR
# WOODLAND BEND SUBDIVISION

## CITY OF NORTH ROYALTON - CUYAHOGA COUNTY - OHIO
**February 27, 2024**

**DESIGNED BY:**


POLARIS ENGINEERING & SURVEYING, INC.
34600 CHARDON ROAD - SUITE D
WILLOUGHBY HILLS, OHIO 44094
(440) 944-4433 (440) 944-3722 (Fax)
www.polaris-es.com


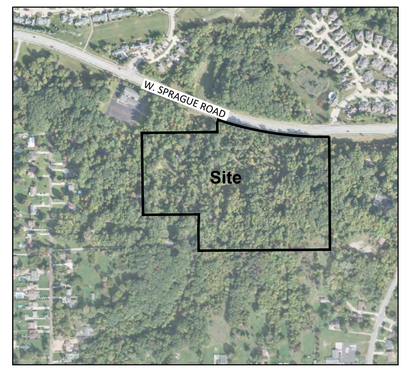


**SITE MAP**
1"=500'

**DEVELOPED BY:**


FLG WOODLAND BEND, LLC
25700 SCIENCE PARK DRIVE, SUITE 360
BEACHWOOD, OHIO 44122
CONTACT: MARK HOLZ
PHONE: (216) 214-2329
E-MAIL: MARK@FRONTIERLG.COM


## DRAWING INDEX


| DESCRIPTION | SHEET NO. |
|---|---|
| TITLE SHEET | 1* |
| GENERAL NOTES | 2 |
| OVERALL SITE | 3 |
| EXIST CONDITIONS | 4 |
| UTILITY PLAN | 5 |
| PLAN & PROFILES | 6-9 |
| FINAL GRADING PLAN & S.W.M. PLAN | 10* |
| S.W.M. BASIN DETAILS | 11* |
| MASS GRADING & SWP3 | 12* |
| SWP3 NOTES | 13* |
| SWP3 DETAILS | 14* |
| PAVEMENT & INTERSECTION DETAILS | 15 |
| SEWER DETAILS | 16 |
| WATER DETAILS | 17 |
| STREET TREE PLAN | T1 |


*DENOTES SWP3 SHEETS

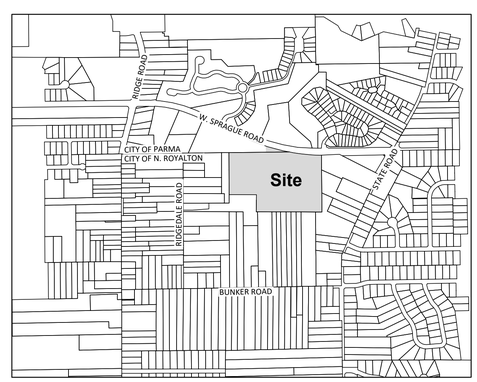


**VICINITY MAP**
N.T.S.

## APPROVALS

SEWER APPROVED BY O.E.P.A. BY LETTER DATED: _____, 20__.

WATER APPROVED BY O.E.P.A. BY LETTER DATED: _____, 20__.

APPROVED BY THE CITY OF NORTH ROYALTON, OHIO:

BY _____ DATE: _____
JUSTIN HASELTON
CITY OF NORTH ROYALTON ENGINEER

2/27/24
KEVIN T. HOFFMAN P.E. #74831

STATE OF OHIO
KEVIN T. HOFFMAN 74831
REGISTERED PROFESSIONAL ENGINEER

TITLE SHEET

CONTRACT No.
22057

| SHEET | OF |
|---|---|
| 01 | 17 |

# GENERAL NOTES

A PRE-CONSTRUCTION CONFERENCE SCHEDULED BY THE CITY ENGINEER SHALL BE HELD PRIOR TO THE START OF ANY WORK. IN ADDITION, THE CONTRACTOR SHALL PROVIDE 48 HOUR NOTICE TO THE WESTLAKE CITY ENGINEER PRIOR TO BEGINNING WORK TO ARRANGE FOR INSPECTION.

THE LATEST EDITION OF STANDARD SPECIFICATIONS OF THE CITY OF NORTH ROYALTON CONSTRUCTION STANDARDS, INCLUDING ALL SUPPLEMENTAL SPECIFICATIONS AND STANDARD DRAWINGS, SHALL GOVERN THIS PROJECT.

ALL WORK CONTEMPLATED SHALL BE GOVERNED BY THE RULES, REGULATIONS AND SPECIFICATIONS OF THE CITY OF NORTH ROYALTON ENGINEER AND AT ALL TIMES BE SUBJECT TO HIS DIRECT INSPECTION.

ALL CITY OF NORTH ROYALTON STANDARD CONSTRUCTION DRAWINGS AND METHODS SHALL APPLY TO THIS PROJECT, TO INCLUDE ANY AMENDMENTS THERETO.

ALL WORK CONTEMPLATED UNDER THIS CONTRACT SHALL COMPLY WITH THE U.S. DEPARTMENT OF LABOR OCCUPATIONAL SAFETY AND HEALTH ACT.

STATIONING SHOWN HEREON IS ALONG THE CENTERLINE OF THE RIGHT OF WAY FOR STORM SEWERS, SANITARY SEWERS, WATER MAINS, AND PAVING WORK.

# UTILITY CONTACTS

THE LOCATIONS OF ALL EXISTING UNDERGROUND UTILITY FACILITIES ARE SHOWN ON THE PLANS FROM DATA AVAILABLE AT THE TIME OF THE FIELD SURVEY IN ACCORDANCE WITH SECTION 153.64 OF THE OHIO REVISED CODE. THE CONTRACTOR SHALL BE RESPONSIBLE FOR NOTIFICATIONS OF THE EXISTING UTILITY OWNERS AND UTILITY PROTECTION SERVICE LISTED BELOW IN ACCORDANCE WITH SECTION 153.64 OF THE OHIO REVISED CODE. THE CONTRACTOR SHALL BE RESPONSIBLE FOR NOTIFICATION OF THE EXISTING UTILITY OWNERS AND UTILITY PROTECTION SERVICE LISTED BELOW IN ACCORDANCE WITH SECTION 154.64 OF THE O.R.C. AND AS OUTLINED IN PROJECT SPECIFICATIONS. THE UTILITY OWNERSHIPS ARE AS FOLLOWS:

OHIO UTILITIES PROTECTION SERVICE
106 WEST RYEN ROOM 427
YOUNGSTOWN, OHIO 44051
PHONE: (800) 362-2764

CITY OF NORTH ROYALTON ENGINEERING DEPT.
11545 ROYALTON ROAD
NORTH ROYALTON, OHIO 44133
PHONE: (440) 582-3001
FAX: (440) 582-3089
CONTACT: JUSTIN HASELTON, P.E.

THE ILLUMINATING COMPANY
6896 MILLER ROAD, SUITE 101
BRECKSVILLE OHIO 44141
PHONE: (440) 546-8677
(TIM DENZLER)

AT&T
13630 LORAIN AVE.-3rd FLOOR
CLEVELAND, OHIO 44111
PHONE: (216) 476-6051
(JESSICA HANOBIK)

COLUMBIA GAS OF OHIO
3101 NORTH RIDGE ROAD, EAST
LORAIN, OH 44055
MIDDLEBURG HEIGHTS, OHIO 44130
PHONE: (440) 752-2649
(JANINE MAWSON)

CITY OF CLEVELAND DIVISION OF WATER
1201 LAKESIDE AVE.-2ND FLOOR
CLEVELAND, OHIO 44114
PHONE: (216) 664-2444
(FRED ROBERTS)

CHARTER COMMUNICATIONS
(SPECTRUM CABLE)
1200 BROOKSTONE AVE.
AKRON, OHIO 44310
PHONE: (330) 572-4129
(JIM NICHOLAS)

BREEZLINE
105 BLAZE INDUSTRIAL PARKWAY
BEREA, OH 44017
PHONE: (440)-625-0305
MOBILE: (440) 915-8254
(TOM AUBRY)

OHIO OIL & GAS PRODUCERS UNDERGROUND PROTECTION SERVICE (OGPUPS)
(800) 925-0988

# STORM SEWER SPECIFICATIONS

STORM SEWER

ALL STORM SEWER MAINS SHALL BE ADS N-12 HDPE STORM SEWER WITH SOIL-TIGHT JOINTS.

THE CONTRACTOR SHALL TEST ALL HDPE STORM SEWER PIPE PER ODOT SUPPLEMENTAL SPECIFICATIONS 942 AND 944 FOR DEFLECTION WITH A NINE (9) ARM MANDREL. MAXIMUM ALLOWABLE DEFLECTION SHALL BE 7.5% OF ITS BASE INSIDE DIAMETER WHEN MEASURED NOT LESS THAN 30 DAYS AFTER COMPLETION OF INSTALLATION.

ALL STORM SEWER LATERALS SHALL PVC SDR 35 INSTALLED AT MINIMUM 1% SLOPE.

# SANITARY SEWER SPECIFICATIONS

SANITARY SEWER SPECIFICATIONS

| | | |
|---|---|---|
| - | LESS THAN 4' OF COVER | CL 52 DIP |
| - | 4' TO 16' OF COVER | PVC SDR 35 |
| - | OVER 16' OF COVER | PVC SDR 26 |

PVC PLASTIC PIPE AND FITTINGS SHALL HAVE A MINIMUM PIPE STIFFNESS OF 46 PSI AT 5% VERTICAL RING DEFLECTION PER ASTM D2412, AND SHALL CONFORM TO ASTM D3034; JOINTS SHALL CONFORM TO ASTM D3212 AND SHALL BE DESIGNED TO RETAIN THE GASKET TO PREVENT PULL OUT DURING THE MAKING OF THE JOINT.

# EPA UTILITY NOTES:

1. TEN FEET MINIMUM HORIZONTAL SEPARATION (OUT-TO-OUT, CLEAR) WILL BE MAINTAINED BETWEEN WATER LINE AND SANITARY & STORM SEWERS.
2. AN 18" MINIMUM VERTICAL SEPARATION (OUT-TO-OUT, CLEAR) WILL BE MAINTAINED BETWEEN THE WATER LINE AND SANITARY & STORM SEWERS AT ALL CROSSINGS.
3. THE PROPOSED WATERLINE IMPROVEMENTS WILL PROVIDE A MINIMUM 35 PSI PRESSURE AT THE CURB STOP DURING NORMAL OPERATING CONDITIONS. A MINIMUM 20 PSI AT GROUND LEVEL SHALL BE MAINTAINED AT ALL POINTS IN THE DISTRIBUTION UNDER ALL CONDITIONS OF FLOW.
4. BOOSTER PUMPS ARE NOT PERMITTED ON SERVICE CONNECTIONS.
5. ALL WATER MAIN SHALL BE DISINFECTED IN ACCORDANCE WITH AWWA C651.
6. WATERMAIN INSTALLATION AND TESTING SHALL BE IN ACCORDANCE WITH AWWA C600.
7. PRECAST CONCRETE MANHOLES SHALL CONFORM TO ASTM C-478 WITH JOINTS PER ASTM C-443. PIPE CONNECTION TO MANHOLE SHALL BE MADE USING FLEXIBLE GASKET JOINTS PER ASTM C-923.
8. SANITARY SEWER MANHOLE VACUUM TESTING SHALL CONFORM TO ASTM C-1244 SPECIFICATIONS.
9. ALL SOLID WALL PLASTIC PIPE SHALL BE SUBJECTED TO A MINIMUM 5% DEFLECTION TESTING. DEFLECTION TESTING SHALL CONFORM TO ASTM D-2122 SPECIFICATIONS. DEFLECTION TESTING SHALL BE PERFORMED AT LEAST 30 DAYS AFTER INSTALLATION.
10. ALL SANITARY SEWER MUST HAVE PREMIUM JOINTS, AND THE ENTIRE SYSTEM MUST PASS AN INFILTRATION TEST AND EXFILTRATION TEST AFTER CONSTRUCTED HAS BEEN COMPLETED. THE MAXIMUM ALLOWABLE RATE OF INFILTRATION AND EXFILTRATION SHALL BE 100 GALLONS PER INCH DIAMETER OF THE SEWER PER MILE PER DAY.
11. SANITARY SEWER BEDDING SHALL BE AS PER ASTM D-2321.
12. ROOF DRAINS, FOUNDATION DRAINS, AND OTHER CLEAN WATER CONNECTIONS TO THE SANITARY SEWER SYSTEM ARE PROHIBITED.

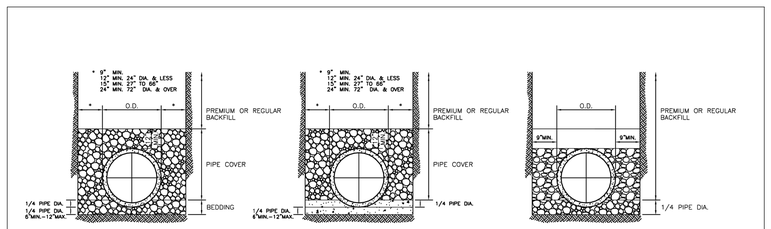


TYPICAL TRENCH DETAIL FLEXIBLE PIPE

TYPICAL TRENCH DETAIL WITH CONCRETE CRADLE

TYPICAL TRENCH DETAIL FOR CONCRETE OR DUCTILE IRON PIPE

## NOTES

PREMIUM BACKFILL SHALL CONSIST OF COARSE INTERLOCKING AGGREGATE NO. 57, 6, 67, 68, 7, 78, 8 AND LIMESTONE SCREENINGS. NO SLAG PERMITTED.

PIPE COVER SHALL CONSIST OF COARSE INTERLOCKING AGGREGATE NO. 57, 6, 67, 68, 7, 78 OR 8.
BEDDING SHALL CONSIST OF COARSE INTERLOCKING AGGREGATE NO. 57, 6, 67, 68, 7, 78 OR 8 FOR 60" OR SMALLER DIAMETER PIPE, FOR 66" OR LARGER DIAMETER PIPE, NO.4 AGGREGATE MAY BE USED.

TRENCH WIDTH FOR TRENCH WITH CONCRETE CRADLE SHALL CONFORM TO TYPE I BEDDING, CRADLE WIDTH TO BE O.D. + 8" ON EACH SIDE OF PIPE.

FOR CONCRETE AND DUCTILE IRON PIPE, PIPE COVER IS TO THE TOP OF PIPE OR GREATER.

IN PAVED AREAS, COARSE INTERLOCKING AGGREGATE TO THE TOP OF THE TRENCH ON ALL TYPES OF PIPE.

IN GRASS AREAS, COARSE INTERLOCKING AGGREGATE TO WITHIN 3 INCHES OF FINAL GRADE OR AT MINIMUM 80% OF THE PIPE DIAMETER, WHICHEVER IS GREATER AON ALL TYPES OF PIPE.

TYPICAL TRENCH DETAILS
NOT TO SCALE

TRENCH BEDDING SHALL CONFORM TO ASTM D 2321, CLASS IA, IB, II OR III.

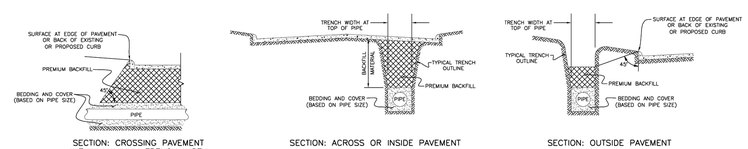


SECTION: CROSSING PAVEMENT WITHIN MAXIMUM TRENCH WIDTH

SECTION: ACROSS OR INSIDE PAVEMENT

SECTION: OUTSIDE PAVEMENT

TYPICAL TRENCH SECTIONS
NOT TO SCALE

811 O.U.P.S. REFERENCE
A-236-401-053
2 WORKING DAYS BEFORE YOU DIG CALL 8-1-1
OHIO UTILITIES PROTECTION SERVICE NON-MEMBERS MUST BE CALLED DIRECT

EXISTING UNDERGROUND UTILITIES NOTE:
THE SIZE AND LOCATION, BOTH HORIZONTAL AND VERTICAL OF THE UNDERGROUND UTILITIES SHOWN HEREON, HAVE BEEN OBTAINED BY A SEARCH OF AVAILABLE RECORDS. THE EXACT LOCATION OF UNDERGROUND FEATURES CANNOT BE ACCURATELY, COMPLETELY, AND RELIABLY DEPICTED HEREON. VERIFICATION BY FIELD OBSERVATION HAS BEEN CONDUCTED. WHERE PRACTICAL, HOWEVER, POLARIS ENGINEERING & SURVEYING, INC. DOES NOT GUARANTEE THE COMPLETENESS NOR ACCURACY THEREOF.

NOTE: THIS SURVEY SUBJECT TO CHANGE UPON RECEIPT OF ANY ADDITIONAL AVAILABLE UNDERGROUND UTILITY INFORMATION.

## CLEVELAND WATER NOTES FOR WATER MAIN INSTALLATION AND/OR REPLACEMENT

DEVELOPERS, ENGINEERS, AND CONTRACTORS ARE TO ABIDE BY THE MOST CURRENT VERSION OF THE CLEVELAND WATER NOTES AND DETAILS. THE MOST UP-TO-DATE VERSION CAN BE FOUND AT WWW.CLEVELANDWATER.COM/CONSTRUCTION/

**GENERAL:**

1. ALL WATER WORK REQUIRED, WHETHER SHOWN ON THE PLANS OR AS DIRECTED BY CLEVELAND WATER, SHALL BE AT THE EXPENSE OF THE PROJECT UNLESS OTHERWISE AGREED TO BY THE COMMISSIONER OF THE CLEVELAND DIVISION OF WATER.

2. THE INFORMATION SHOWN ON THE CLEVELAND DIVISION OF WATER'S SUMMARY OF WORK CHARGE LETTER, STAFF MAPS, AS-BUILT DRAWINGS, AND GIS ARE TAKEN FROM EXISTING AVAILABLE RECORDS, AND THEIR ACCURACY IS NOT GUARANTEED.

3. CALL THE INSPECTION AND ENFORCEMENT UNIT AT 216-664-2362 TO SCHEDULE A PRECONSTRUCTION MEETING AT LEAST 1 WEEK PRIOR TO STARTING CONSTRUCTION. THE OPERATION OF ANY VALVE OR ALTERATION OF ANY PART OF THE WATER SYSTEM BY CONTRACTORS OR THEIR EMPLOYEES IS PROHIBITED 24 HOUR PRESUMPTION SHOW THE CLEVELAND DIVISION OF WATER INSPECTOR SEE ALSO NOTE 20 REGARDING ADDITIONAL ADVANCE NOTIFICATION REQUIRED IN AREAS SUSPECTED TO CONTAIN LEAD SERVICE CONNECTION (ALL AREAS INSTALLED PRIOR TO 1954)

4. PRIOR TO REQUESTING CHLORINATION, THE CONTRACTOR SHALL SUPPLY THE CLEVELAND WATER INSPECTOR WITH REQUIRE DRAWINGS SHOWING CHANGES MADE FROM THE APPROVED DESIGN DRAWINGS AND ACTUAL MEASUREMENTS. CHLORINATION SHALL NOT OCCUR BEFORE THESE DRAWINGS ARE SUBMITTED.

5. FOR THE PURPOSES OF CHLORINATION AND BACTERIOLOGICAL TESTING OF THE WATER MAINS THE CONTRACTOR SHALL PROVIDE AND INSTALL AT EACH OF THE CHLORINATION PIT LOCATIONS SHOWN AND AT OTHER LOCATIONS DETERMINED BY CLEVELAND WATER, FLUSHING / SAMPLING TAP SIZES ARE TO BE DETERMINED CLEVELAND WATER. CHLORINATION PITS SHALL BE SIX (6) FOOT SQUARE AND ARE TO MEET OSHA STANDARDS AND CUSTOMER TAPS SHALL BE INSTALLED PRIOR TO CHLORINATION.

6. A TWO YEAR WARRANTY, COMMENCING FROM THE DATE OF ACCEPTANCE OF THE FINAL CHLORINATION OF THE WATER MAIN INSTALLATION SHALL BE PROVIDED BY THE BUILDER/DEVELOPER AND/OR CONTRACTOR FOR ALL WATER MAINS AND SERVICE CONNECTION WORK PERFORMED BY THE CONTRACTOR, INCLUDING TAPS IS PERFORMED. SHOULD ANY LEAKS OCCUR AND REPAIRS BE REQUIRED DUE TO DEFECTIVE MATERIAL OR POOR WORKMANSHIP, A LETTER INDICATING THE COMMENCEMENT DATE AND END DATE OF THE WARRANTY SHALL BE INCLUDE WITH THE AS-BUILT SUBMISSION IN NOTE 12.

7. USE BACKFILL MATERIAL AS SPECIFIED AND COMPACT SUFFICIENTLY IN THOSE AREAS WHERE EXISTING MAINS AND WATER SERVICE CONNECTIONS ARE EXPOSED. (SEE CLEVELAND WATER STANDARD DETAIL STD-301)

8. ALL MATERIALS, INCLUDING BUT NOT LIMITED TO WATER MAINS, FIRE HYDRANTS, VALVES, CONNECTION WATER PIPES AND OTHER WATER APPURTENANCES, SHALL BE NEW AND UNUSED AND SHALL CONFORM TO THE MOST CURRENT CLEVELAND WATER SPECIFICATIONS. ALL MATERIAL SHALL BE INSTALLED IN ACCORDANCE WITH CLEVELAND WATER'S STANDARDS.

9. THE CONTRACTOR SHALL BE RESPONSIBLE FOR ANY DAMAGE TO EXISTING WATER MAINS AND APPURTENANCES THEREOF WHEN CONSTRUCTING OR CONNECTING THE NEW WATER MAIN. THIS SHALL INCLUDE LEAKING JOINTS IN EXISTING FITTINGS WHICH MAY REQUIRE REPLACEMENT FITTINGS AT THE DISCRETION OF THE INSPECTOR IF IT IS DETERMINED THEY WERE DISTURBED. ALL REPAIRS TO DAMAGED EXISTING FACILITIES SHALL BE MADE BY THE CONTRACTOR, AT THE PROJECT EXPENSE, TO THE SATISFACTION OF CLEVELAND WATER.

10. ALL HYDROSTATIC PRESSURE TESTING SHALL BE DONE BY THE CONTRACTOR IN THE PRESENCE OF THE CLEVELAND WATER INSPECTOR. THE HYDROSTATIC TEST PRESSURE SHALL BE 75 PSI ABOVE THE STATIC PRESSURE PREVAILING AT THE SITE, BUT IN NO CASE LESS THAN 150 PSI. THE PRESSURE TEST SHALL BE FOR A DURATION OF TWO (2) HOURS WITH THE PRESSURE BEING MAINTAINED WITHIN 5 PSI OF THE REQUIRED TEST PRESSURE. SHOULD THE PRESSURE TEST FAIL THE CONTRACTOR SHALL FIND AND CORRECT THE DEFICIENCIES TO THE SATISFACTION OF CLEVELAND WATER AND REPEAT THE TWO (2) HOUR PRESSURE TEST.

11. ALL BURIED WATER MAINS, FITTINGS, VALVES, FIRE HYDRANT BRANCH PIPING AND APPURTENANCES SHALL BE ENCASED WITH POLYETHYLENE ENCASEMENT INSTALLED IN ACCORDANCE WITH THE MOST CURRENT REVISION OF ANSI/AWWA C105/A21.5 MODIFIED METHOD "A".

12. THE PROJECT'S PROFESSIONAL ENGINEER OR A DESIGNATED PROFESSIONAL SURVEYOR SHALL OBTAIN ACTUAL FIELD MEASUREMENTS OF THE MAIN DURING INSTALLATION AND SHALL PROVIDE THE CLEVELAND WATER INSPECTOR WITH AS-BUILT DRAWINGS MEETING CLEVELAND WATER STANDARDS WITHIN 30 DAYS OF THE WATER MAIN GOING INTO SERVICE AND ALL TAPS/FITTINGS BEING MADE. ONE HARD COPY AND ONE PDF COPY SHALL BE PROVIDED. DRAWINGS SHALL BE SIGNED, DATED, AND STAMPED WITH THE ENGINEER OR SURVEYOR'S SEAL. REDLINE DRAWINGS ARE NOT SUFFICIENT. CLEVELAND WATER RESERVES THE RIGHT TO WITHHOLD PAYMENT AND/OR APPROVAL OF FUTURE WORK IF AS-BUILTS ARE NOT SUBMITTED.

**WATER MAINS:**

13. ALL PIPE, UNLESS OTHERWISE APPROVED BY CLEVELAND WATER, SHALL BE DUCTILE IRON, MINIMUM CLASS 52. CEMENT LINED PAN AND PLUG ON JOINTS WITH RADIALLY COMPRESSED RUBBER RING GASKET AND INSTALLED AS PER THE MOST CURRENT REVISION OF AWWA C600.

14. ALL FITTINGS, UNLESS OTHERWISE CALLED FOR, SHALL BE APPROVED DUCTILE IRON, CLASS 350, CEMENT LINED OR FJS ON BONDED EPOXY COATED. ALL FITTINGS AND PIPE CONNECTED TO

DATE 06/02/2015 BY: FSR STD-011 (PAGE 1 OF 3)

## CLEVELAND WATER NOTES FOR WATER MAIN INSTALLATION AND/OR REPLACEMENT

FITTINGS SHALL BE RESTRAINED USING A RETAINED MECHANICAL JOINT CONFORMING TO THE MATERIAL AND PERFORMANCE REQUIREMENTS OF ANSI/AWWA C-110/A21.10 AND ANSI/AWWA C-111/A21.11, OR COMPACT FITTINGS IN ACCORDANCE WITH ANSI/AWWA C-153/A21.53. EXCEPT FOR ANCHOR TEES, REDUCERS OR OTHER SPECIAL CIRCUMSTANCES WHEN BY CLEVELAND WATER, ALL FITTINGS ARE TO HAVE BELL ENDS.

15. ALL BOLTS AND NUTS ON ALL RETAINED MECHANICAL JOINTS SHALL HAVE FIRST APPLIED ONE (1) COAT OF BITUMASTIC PAINTING.

16. WHERE SHOWN ON THE PLANS, OR WHEN OTHERWISE CALLED FOR, PIPE AND FITTINGS SHALL HAVE APPROVED TYPE I OR TYPE II BOLTLESS RESTRAINED PUSH ON JOINTS TO THE LIMITS SHOWN ON THE DRAWINGS.

17. AT THE END OF EACH WORKDAY, THE CONTRACTOR SHALL PLUG ALL OPEN PIPE ENDS WITH WATER TIGHT PLUGS AS PER THE PREVENTIVE AND CORRECTIVE MEASURES DURING CONSTRUCTION SECTION OF THE MOST CURRENT REVISION OF AWWA C651 AS TO PREVENT THE INTRODUCTION OR INTRUSION OF ANY FOREIGN OBJECTS OR MATERIALS. DATE STAMPED DIGITAL PHOTOS SHALL BE PROVIDED FOR EACH WORKDAY DEMONSTRATING THAT PROPER AWWA C651 METHODS WERE USED TO PLUG ALL OPEN WATER MAIN ENDS. EACH PHOTO SHALL CLEARLY IDENTIFY THE STATION AT WHICH THE PIPE IS PLUGGED. THE STAMPING SHALL BE SHOWN BY THE USE OF A STAMP OR MARKER PLACED AT THE PLUGGED PIPE END.

PHOTOS SHALL BE SUBMITTED ON A DAILY BASIS UNLESS OTHERWISE DEEMED BY THE CLEVELAND WATER INSPECTOR OR ENGINEER. ALL PHOTOS TAKEN OVER THE COURSE OF THE PROJECT SHALL BE SUBMITTED BY THE CONTRACTOR AS PART OF THE AS-BUILT SUBMITTAL. PHOTOS ARE TO INCLUDE REDLINES OR OTHER SPECIAL CIRCUMSTANCES WHEN BY CLEVELAND WATER. ALL FITTINGS ARE TO HAVE BELL ENDS.

**HYDRANTS:**

18. IN ALL HYDRANT INSTALLATIONS THE CONTRACTOR SHALL PLACE ALL HYDRANTS STEAMER NOZZLE TOWARD THE PAVEMENT PRIOR TO TESTING AND CHLORINATION OF WATER MAINS. ONLY CLEVELAND WATER APPROVED HYDRANT MODELS SHALL BE INSTALLED. CONTRACTOR SHALL CONSULT WITH THE LOCAL MUNICIPALITY'S ENGINEERING OR SERVICE DEPARTMENT TO OBTAIN HYDRANT NOZZLE THREAD REQUIREMENTS IF NOT INDICATED ON THE APPROVED PLANS. ALL HYDRANTS SHALL BE FACTORY EQUIPPED WITH THE APPROPRIATE HYDRANT NOZZLE.

HYDRANT BRANCHES SHALL BE FULLY RESTRAINED AND INSTALLED PER THE APPROPRIATE HYDRANT CLEVELAND WATER HYDRANT DETAIL. HYDRANT BRANCH VALVES SHALL BE PLACED DIRECTLY AFTER THE HYDRANT TEE UNLESS OTHERWISE APPROVED BY THE INSPECTOR IN WRITING.

**VALVES:**

19. ALL VALVES SHALL BE AN APPROVED MODEL RESILIENT SEATED GATE VALVES AS PER THE MOST CURRENT VERSION OF AWWA C509 OR C515. VALVE OPERATING NUTS SHALL BE TAPERED (1 7/8" TO 2" FROM TOP TO BOTTOM) AND 2 DEEP. VALVES MORE THAN 20 YEARS OLD AT THE INTERSECTION TO EXISTING MAINS SHALL BE REPLACED AT THE PROJECT'S EXPENSE UNLESS OTHERWISE DIRECTED.

**LEAD SERVICE CONNECTIONS:**

20. LEAD SERVICES: A MINIMUM OF 45 DAYS BEFORE THE BEGINNING OF CONSTRUCTION, CWD SHALL PROVIDE A NOTICE TO ALL AFFECTED CUSTOMERS THAT THEIR WATER SERVICE LINE WILL BE DISTURBED. A MINIMUM OF 30 DAYS BEFORE THE RECONSTRUCTION MEETING THE CONTRACTOR OR ENGINEER SHALL PROVIDE CWD AND THE LOCAL MUNICIPALITY OR OUTSIDE THE CITY OF CLEVELAND A LIST OF ALL CUSTOMER ADDRESSES THAT WILL BE AFFECTED BY THE WATER MAIN REPLACEMENT PROJECT. FAILURE TO PROVIDE A LIST OF CUSTOMER ADDRESSES IN A TIMELY MANNER MAY RESULT IN PROJECT DELAYS.

ANY CITY-OWNED LEAD SERVICE LINE EXCLUDING SHALL BE REPLACED WITH TYPE K COPPER. THE REPLACEMENT SERVICE LINE SHALL BE SIZE-ON-SIZE WITH A 1-INCH MINIMUM DIAMETER. IF A CUSTOMER-OWNED LEAD SERVICE LINE IS ENCOUNTERED, THE CONTRACTOR SHALL LEAVE A CWD-SUPPLIED CUSTOMER NOTIFICATION DOOR HANGER ON ALL ACCESSIBLE POINTS OF ENTRY TO THE HOME AND IMMEDIATELY NOTIFY THE CWD INSPECTOR. IF THE CWD INSPECTOR IS NOT AVAILABLE, CALL PAYTON HALL AT (216) 664-3444, EXT. 73000 OR (216) 973-2721. CUSTOMERS WITH A CUSTOMER-OWNED LEAD SERVICE LINE SHALL NOT BE RECONNECTED TO THE NEW WATER MAIN WITHOUT EXPRESS WRITTEN APPROVAL FROM PAYTON HALL OR HIS APPROVED REPRESENTATIVE AT CWD.

AS PART OF THIS CONTRACT, THE CONTRACTOR SHALL OFFER EACH CUSTOMER TO REPLACE LEAD SERVICES FROM THE CORPORATION STOP TO THE INLET STOP IN WASTE VALVE INSIDE THE CUSTOMER'S HOME. IF THE REPLACEMENT IS NOT COVERED UNDER THE BID ITEMS, THE CONTRACTOR SHALL PROVIDE CWD AND THE LOCAL MUNICIPALITY IF OUTSIDE THE CITY OF CLEVELAND WITH A CHANGE ORDER AND COST ESTIMATE FOR THE CUSTOMER-OWNED LEAD SERVICE LINE REPLACEMENT. UPON APPROVAL FROM CWD (AND THE LOCAL MUNICIPALITY IF OUTSIDE THE CITY OF CLEVELAND), THE CONTRACTOR SHALL PERFORM THE REPLACEMENT OF THE CUSTOMER-OWNED LEAD SERVICE LINE. AS STATED ABOVE, CUSTOMERS WITH CUSTOMER-OWNED LEAD SERVICE LINES SHALL NOT BE RECONNECTED TO THE NEW WATER MAIN WITHOUT EXPRESS WRITTEN APPROVAL FROM PAYTON HALL OR HIS APPROVED REPRESENTATIVE AT CWD.

IN THE EVENT THAT A CWD WAIVER IS GRANTED SUCH THAT A CUSTOMER-OWNED LEAD SERVICE LINE IS NOT REPLACED, CWD SHALL SUPPLY THE CONTRACTOR WITH LEAD FILTERS AND FOUNTAINS THAT THE CONTRACTOR SHALL DISTRIBUTE TO EACH RESIDENCE WITHIN THE PROJECT AREA, INCLUDING TO ALL UNITS OF MULTI-UNIT HOUSING BUILDINGS. THE FILTERS SHALL BE POUR-THROUGH PITCHER TYPE LEAD FILTERS THAT ARE NSF/ANSI 53 CERTIFIED TO REMOVE

DATE 06/01/2015 BY: FSR STD-011 (PAGE 2 OF 3)

## CLEVELAND WATER NOTES FOR WATER MAIN INSTALLATION AND/OR REPLACEMENT

LEAD. THE FILTERS, A 3-MONTH SUPPLY OF FILTERS, AND CWD-SUPPLIED USE INSTRUCTIONS AND OTHER APPLICABLE MATERIALS SHALL BE DISTRIBUTED. RECEIPTS OF RESIDENTS WHO RECEIVE AND WHO REFUSED THE FILTERS SHALL BE PROVIDED BY THE CONTRACTOR TO CWD AND THE LOCAL MUNICIPALITY IF OUTSIDE THE CITY OF CLEVELAND.

AT THE BEGINNING OF THE DAY THAT A CUSTOMER IS SCHEDULED TO BE CONNECTED TO THE NEW WATER MAIN, THE CONTRACTOR SHALL DISTRIBUTE THE APPROPRIATE CWD-SUPPLIED CUSTOMER NOTIFICATION DOOR HANGER AND OTHER APPLICABLE MATERIALS ON ALL ACCESSIBLE POINTS OF ENTRY TO THE HOME AND IN A PROMINENT LOCATION AT ALL MULTI-UNIT HOUSING BUILDINGS. THE APPROPRIATE DOOR NOTIFICATION WILL BE DETERMINED BY (1) WHETHER A CUSTOMER-OWNED LEAD SERVICE LINE REMAINS IN THE PROJECT AREA AND (2) THE TYPE OF MATERIAL OF THE INDIVIDUAL CUSTOMER-OWNED SERVICE LINE.

21. DIELECTRIC COUPLINGS: IN THE EVENT THAT A CWD WAIVER IS GRANTED SUCH THAT A CUSTOMER-OWNED LEAD SERVICE LINE IS NOT REPLACED, AND A NEW SERVICE IS CONNECTED TO A CUSTOMER-OWNED LEAD SERVICE LINE, A DIELECTRIC COUPLING SHALL BE PROVIDED TO TRANSITION FROM THE NEW MATERIALS TO THE LEAD PIPE. THE MODEL COUPLING USED IS SUBJECT TO APPROVAL FROM CWD. FABRICATION COUPLING OR CWD-APPROVED EQUAL.

**GENERAL SERVICE CONNECTIONS:**

22. AS PART OF THE AS BUILT SUBMISSION IN NOTE 12, THE CONTRACTOR SHALL PROVIDE A TABLE SHOWING ALL EXISTING CONNECTIONS, IDENTIFIED BY CLEVELAND WATER CONNECTION NUMBER, SHOWING THE FINAL CONNECTION MATERIAL FOR BOTH THE CITY SIDE AND OWNER SIDE CONNECTION AS WELL AS THE NEW CONNECTION MATERIAL FOR ALL CONNECTIONS REPLACED. THE TABLE SHALL ALSO NOTE ANY REVISED CONNECTION MEASUREMENTS AND SIZES. A SAMPLE TABLE WILL BE PROVIDED. THE SUBMISSION SHALL BE IN MICROSOFT EXCEL FORMAT. CLEVELAND WATER WILL PROMPTLY PROVIDE RECEIPT AND ACCEPTANCE OF THIS TABLE BEFORE THE PRESSURE TEST AND CHLORINATION / DISINFECTION OF THE MAIN WILL BE PERMITTED.

23. NEW WATER SERVICE CONNECTIONS LOCATIONS SHOWN ON THESE DRAWINGS ARE FOR REFERENCE ONLY AND ARE NOT PART OF THE WATER MAIN APPROVAL. THE SPECIFIC LOCATION FOR EACH CONNECTION WILL BE DETERMINED BY CLEVELAND WATER PRIOR TO THE TAPS BEING INSTALLED. ALL PERMITS FOR TAPS AND METERS FOR PARCELS ASSOCIATED WITH THE WATER MAINS INSTALLED ON THIS PROJECT ARE TO BE OBTAINED BY THE LAND OWNER OR SAID IMPROVEMENT PLANS. IT IS THE LAND OWNERS RESPONSIBILITY TO ARRANGE FOR OBTAINING PERMITS FOR ALL WATER SERVICE CONNECTIONS BEFORE ANY SERVICE CONNECTION WORK MAY PROCEED. ALL FEES CAN BE OBTAINED FROM THE CLEVELAND WATER PERMITS AND SALES SECTION AT 216-664-3150 PROMPT #7 OR 216-664-2444 X75209.

ACCOUNTS SHALL BE INITIATED IN THE LAND OWNER'S NAME AS PART OF THE PERMITTING PROCESS. ALL RESPONSIBILITIES ASSOCIATED WITH EACH WATER SERVICE, INCLUDING THE OWNER SIDE INSPECTIONS, METER SET/WATER PIPING INSPECTION AND THE METER INSTALLATION SHALL BE THE RESPONSIBILITY OF SAID OWNER.

METERS INSTALLATIONS WILL NOT BE AUTHORIZED TO BE INSTALLED UNTIL ALL INSPECTIONS HAVE BEEN COMPLETED. ESTIMATED BILLS MAY ENSUE IF A HOME IS IDENTIFIED AS HAVING WATER SERVICE BUT NO METER HAS BEEN INSTALLED. IF NEW OWNERS, ONCE PARCELS ARE SOLD OFF AND TRANSFER TITLE, DO NOT CONTACT CLEVELAND WATER TO ESTABLISH ACCOUNTS IN THEIR NAME, ACCOUNTS ARE THEIR ASSOCIATED BILLS WILL REMAIN IN THE NAME OF OUR LAST OWNER OF RECORD WHICH MAY BE THE DEVELOPER OR BUILDER. IT IS THE RESPONSIBILITY OF THE NEW OWNER TO TRANSFER ACCOUNTS INTO THEIR NAME WHEN THE PROPERTIES LEGALLY TRANSFER. UPON TRANSFERS OF PROPERTY, SELLER OF PROPERTY MUST COMMUNICATE ALL UNCOMPLETED PORTIONS OF THE REFERENCED RESPONSIBILITIES TO THE NEW OWNER.

24. ONE INCH SERVICE CONNECTIONS SHALL BE PERMITTED TO SERVICE NEW HOMES (AS SHOWN ON APPROVED WATER MAIN EXTENSION PLANS) BASED ON THE FOLLOWING CRITERIA:

- PEAK FLOW DEMANDS DO NOT EXCEED 25 GPM FOR AN INDIVIDUAL HOME/UNIT.
- THE CONNECTIONS DO NOT INCLUDE LIMITED AREA OR NFPA 13D SPRINKLER SYSTEMS

ANY SERVICE REQUESTS DIFFERING FROM THE STATED CRITERIA SHALL REQUIRE THE SUBMITTAL OF A COMPLETE WATER SERVICE APPLICATION FOR EACH WATER SERVICE REQUESTED.

25. ALL CURB VALVE BOXES & METER VAULTS WILL BE INSTALLED IN GRASS AREAS WHEN POSSIBLE. CURB VALVES SHALL BE PLACED APPROXIMATELY 2 FEET OFF THE CURB. CURB VALVES IN EASEMENTS SHALL BE PLACED APPROXIMATELY 2 FEET OFF THE WATER MAIN. IF VALVE BOXES OR METER VAULTS ARE INSTALLED OUTSIDE OF A DEDICATED RIGHT OF WAY OR EASEMENT FOR THE PURPOSES OF WATER SUPPLY, A STANDARD CLEVELAND EASEMENT FOR A VAULT SHALL BE PROVIDED.

**EMERGENCIES:**

26. IF A WATER MAIN OR SERVICE CONNECTION BREAK OCCURS DURING CONSTRUCTION AND EMERGENCY ASSISTANCE IS REQUIRED, PLEASE NOTIFY CLEVELAND WATER AT 216-664-3060. THIS LINE IS AVAILABLE 24/7/365

DATE 06/01/2015 BY: FSR STD-011 (PAGE 3 OF 3)

| REV. No. | | DATE | BY |
|---|---|---|---|
| | | | |
| | | | |
| | | | |
| | | | |
| | | | |

STATE OF OHIO KEVIN HOFFMAN 74831 REGISTERED PROFESSIONAL ENGINEER

DATE: 2/5/24 DRAWN: NMO
SCALE: HOR. N/A VERT. N/A
FOLDER: DWG/Proj. Engineering
FILENAME: 22057 T.N.D.
TAB: 02-General Notes
BNDY. CHK: MPS
BASE. CHK: KTH

# WOODLAND BEND SUBDIVISION

CITY OF NORTH ROYALTON - CUYAHOGA COUNTY - OHIO


POLARIS ENGINEERING &

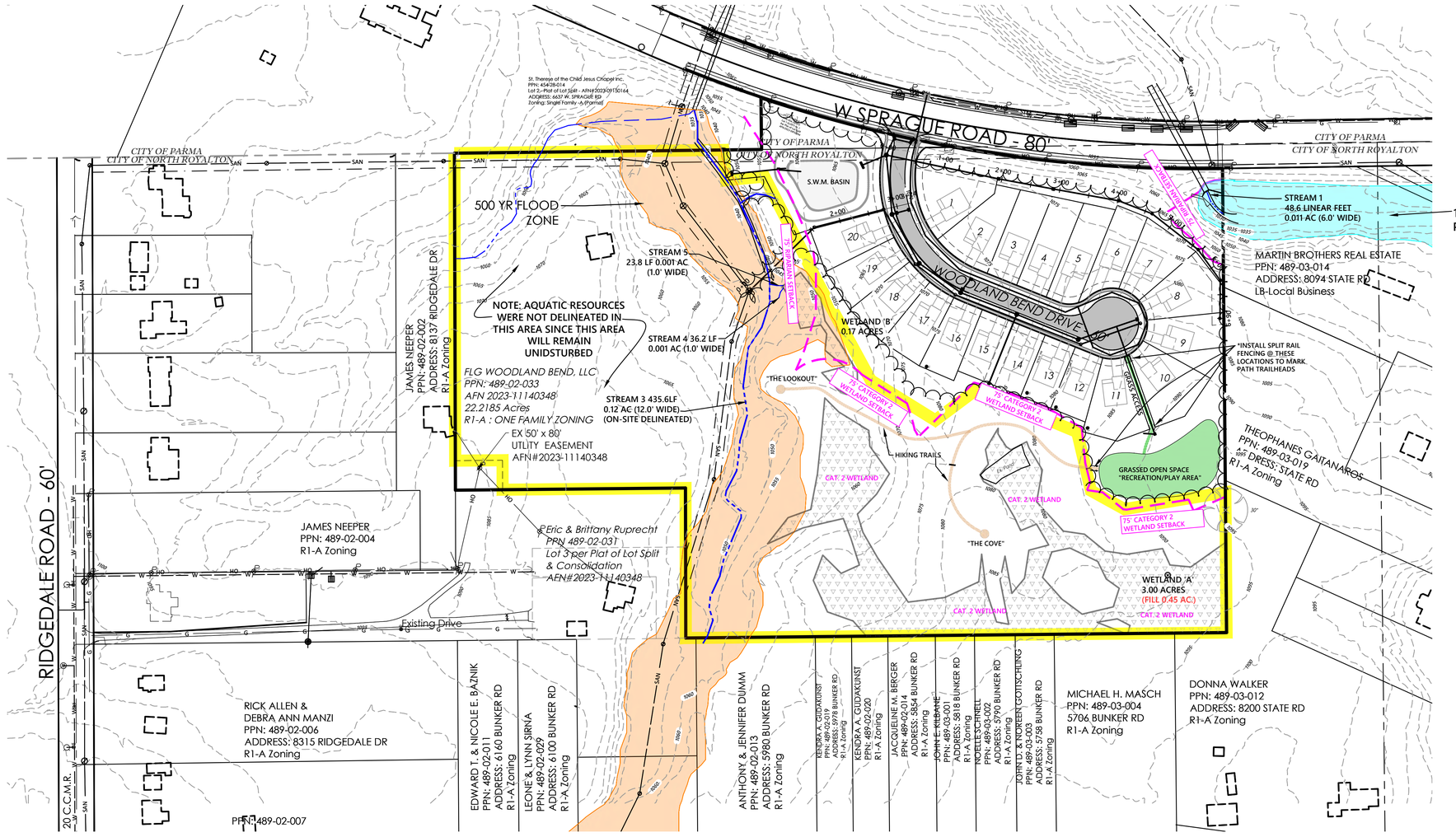


* HIKING TRAILS AS SHOWN SHALL BE CONSTRUCTED OF 4" OF WOODCHIP BASE FROM SITE CLEARING. CONTRACTOR SHALL USE A SMALL SCALE BRUSH HOG & BOB-CAT EQUIPMENT TO CLEAR TRAIL ROUTE AND TO LAY WALKING BASE.

HATCH LEGEND

- WETLANDS AVOIDED 2.72 AC.
- 100 YEAR FLOODPLAIN (PER F.I.R.M. 39035C0301E, Eff. 12/3/2010)
- 500 YEAR FLOODPLAIN (PER F.I.R.M. 39035C0301E, Eff. 12/3/2010)
- PROPOSED AREA TO BE PLACED IN CONSERVANCY (14.48 AC.)

GRAPHIC SCALE

100 0 50 100

(IN FEET)
1 INCH = 100 FEET

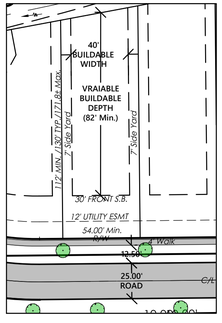


LOT DETAIL
(1"=50')
55' x 112' (Typ.)

CURRENT ZONING: R-1A
PROPOSED ZONING: R-1A CLUSTER W/ CONDITIONAL USE
PROPOSED SITE AREA = 22.22 ACRES IN N. ROYALTON (AFTER RIDGEDALE LOT SPLIT)
0.29 ACRES IN PARMA
22.51 ACRES
PROPOSED DWELLINGS: 20 CLUSTER UNITS

CLUSTER LAND PLANNING CRITERIA (1270.33(d))

| | MINIMUM | PROVIDED |
|---|---|---|
| DEVELOPMENT AREA | 10 AC. | 22.51 AC. |
| DENSITY | 1.9 UNITS/AC. | 0.88 UNITS/AC. |
| OPEN SPACE | 50% | 78% (17.62 AC.) |
| FRONT YARD | 30' (FROM E.O.P.) | 47.5' FROM E.O.P. (30' FROM R/W) |
| REAR YARD | 50' FROM DEVELOPMENT PL | 50' FROM DEVELOPMENT PL |
| PROPERTY LINE SIDE YARDS | | |
| BTWN 1-STORY | 10' | 14' |
| BTWN 1&2 SOTRY | 12' | 14' |
| BTWN 2-STORY | 14' | 14' |
| BTWN SIDE & REAR WALL | 35' | N/A |
| BTWN SIDE & DEVELOP. PL | 50' | 50' |

MISC. LOT REQUIREMENTS
1 CANOPY TREE TO BE PROVIDED PER LOT

STATE OF OHIO
KEVIN T. HOFFMAN
74831
REGISTERED
PROFESSIONAL ENGINEER

| | | | |
|---|---|---|---|
| DATE: 2/5/24 DRAWN: NMO | REV. No. | DATE | BY |
| SCALE: HOR.1"=100' VERT.1"=100' | | | |
| FOLDER: DWG/Proj. Engineering | | | |
| FILENAME: Utility, SWP3, & Grading | | | |
| TAB: 03-Overall Site | | | |
| BNDY. CHK: MPS | | | |
| BASE. CHK: KTH | | | |

# WOODLAND BEND SUBDIVISION

CITY OF NORTH ROYALTON - CUYAHOGA COUNTY - OHIO

POLARIS ENGINEERING & SURVEYING, INC.
34600 CHARDON ROAD - SUITE D
WILLOUGHBY HILLS, OHIO 44094
(440) 944-4433 (440) 944-3722 (Fax)
www.polaris-es.com

polaris Engineering & Surveying

## OVERALL SITE PLAN

CONTRACT No. 22057

SHEET 03 OF 17

GRAPHIC SCALE

50 0 25 50

(IN FEET)
1 INCH = 50 FEET

| PARCEL CURVE TABLE | | | | | | |
|---|---|---|---|---|---|---|
| CURVE | LENGTH | RADIUS | DELTA | CHORD | BEARING | TANGENT |
| C29 | 449.27' | 2331.88' | 11°02'20" | 448.58' | S85°21'46"E | 225.33' |

TOPOGRAPHIC CERTIFICATION:

I, THE UNDERSIGNED, HEREBY CERTIFY THAT THIS TOPOGRAPHY, INDICATED BY 1' CONTOURS, AND ELEVATIONS SHOWN HEREON, REPRESENT AN ACTUAL FIELD SURVEY MADE UNDER MY SUPERVISION ON THE 19TH DAY OF JANUARY, 2023, AND THAT THE ELEVATIONS WERE TAKEN AT APPROPRIATE INTERVALS AND THAT AS OF THAT DATE THEY EXISTED AS INDICATED HEREON. VERTICAL DATUM IS BASED ON NAVD88. TOPOGRAPHIC DATA BEYOND THE IMMEDIATE PROJECT AREA IS PER CUYAHOGA COUNTY GIS INFORMATION.

RICHARD A. THOMPSON, JR., P.S. #7388

STATE OF OHIO · RICHARD A. THOMPSON JR. 7388 · REGISTERED · PROFESSIONAL SURVEYOR

| REV. No. | DATE | BY |
|---|---|---|
| | | |

WETLAND LEGEND

- WETLANDS AVOIDED 2.72 AC.
- WETLAND IMPACT 0.45 AC.
- STREAM IMPACT (624 LF =0.028 AC.)

NOTE: STREAMS AND WETLANDS SHOWN ARE AS PER PRELIMINARY JURISDICTIONAL DETERMINATION FOR DEPARTMENT OF ARMY APPLICATION NO. 2022-00929 DATED 10/26/2022 AND AS DELINEATED BY HZW ENVIRONMENTAL CONSULTANTS.

FLOODPLAIN LEGEND

- 100 YEAR FLOODPLAIN (PER F.I.R.M. 39035C0301E, Eff. 12/3/2010)
- 500 YEAR FLOODPLAIN (PER F.I.R.M. 39035C0301E, Eff. 12/3/2010)

STATE OF OHIO · KEVIN HOFFMAN 74831 · REGISTERED · PROFESSIONAL ENGINEER

| | |
|---|---|
| DATE: 2/5/24 | DRAWN: NMO |
| SCALE: HOR. 1"=50' | VERT. 1"=50' |
| FOLDER: DWG/Proj. Engineering | |
| FILENAME: Utility, SWP3, & Grading | |
| TAB: 04-Existing Conditions | |
| BNDY. CHK: MPS | |
| BASE. CHK: KTH | |

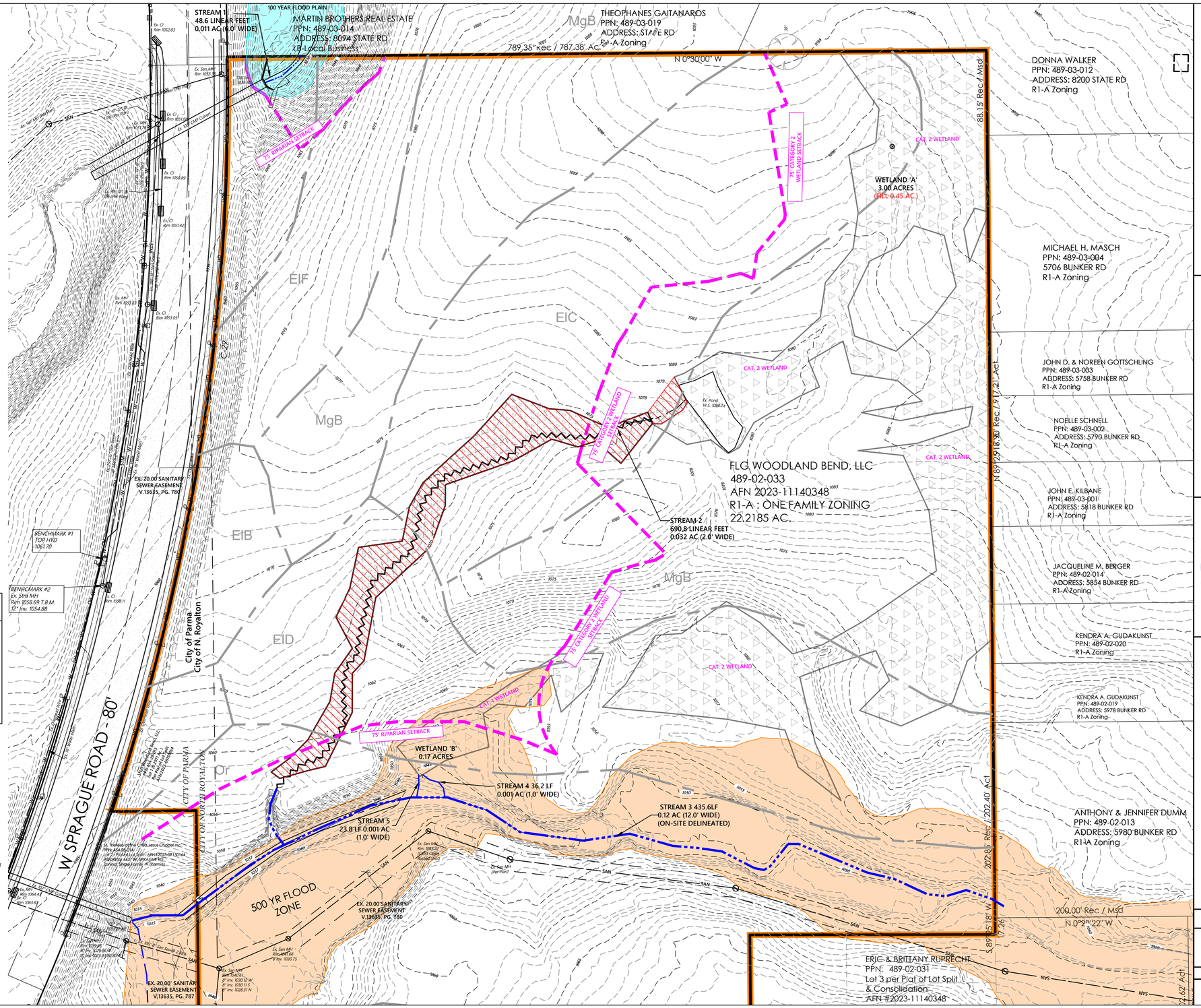


# WOODLAND BEND SUBDIVISION

CITY OF NORTH ROYALTON - CUYAHOGA COUNTY - OHIO


POLARIS ENGINEERING & SURVEYING, INC.
34600 CHARDON ROAD - SUITE D
WILLOUGHBY HILLS, OHIO 44094
(440) 944-4433 (440) 944-3722 (Fax)
www.polaris-es.com


polaris Engineering & Surveying

## EXISTING CONDITIONS

| CONTRACT No. | |
|---|---|
| 22057 | |
| SHEET | OF |
| 04 | 17 |

* DENOTES PARCELS REQUIRING ENGINEERED FILL TO BOTTOM OF FOOTER ELEVATION (1FT BELOW BASEMENT FLOOR FOR STANDARD DWELLINGS OR 42" BELOW BASEMENT FLOOR FOR WALKOUT DWELLINGS

NOTE: ALL DOWNSPOUTS TO CONNECT TO STORM SEWER SYSTEM. SEE PLAN AND PROFILE SHEET CONNECTION CALLOUTS AS TO WHETHER SUMP PUMPS ARE REQUIRED FOR EACH HOUSE.

NOTE: WHERE SUBLOT YARD DRAINS ARE PROPOSED, THE HOUSE CONNECTION SHALL NOT BE TIED INTO THE YARD DRAIN LINE. MAINTAIN SEPARATE LINES AND WYE TOGETHER AT THE FRONT UTILITY EASEMENT.

HATCH LEGEND

- WETLANDS AVOIDED 2.72 AC.
- PORTION OF EXISTING SANITARY SEWER EASEMENT TO BE RELEASED BY NORTH ROYALTON
- PROPOSED STORM WATER MANAGEMENT EASEMENT
- 100 YEAR FLOODPLAIN (PER F.I.R.M. 39035C0301E, Eff. 12/3/2010)
- 500 YEAR FLOODPLAIN (PER F.I.R.M. 39035C0301E, Eff. 12/3/2010)

GRAPHIC SCALE
50 0 25 50
(IN FEET)
1 INCH = 50 FEET

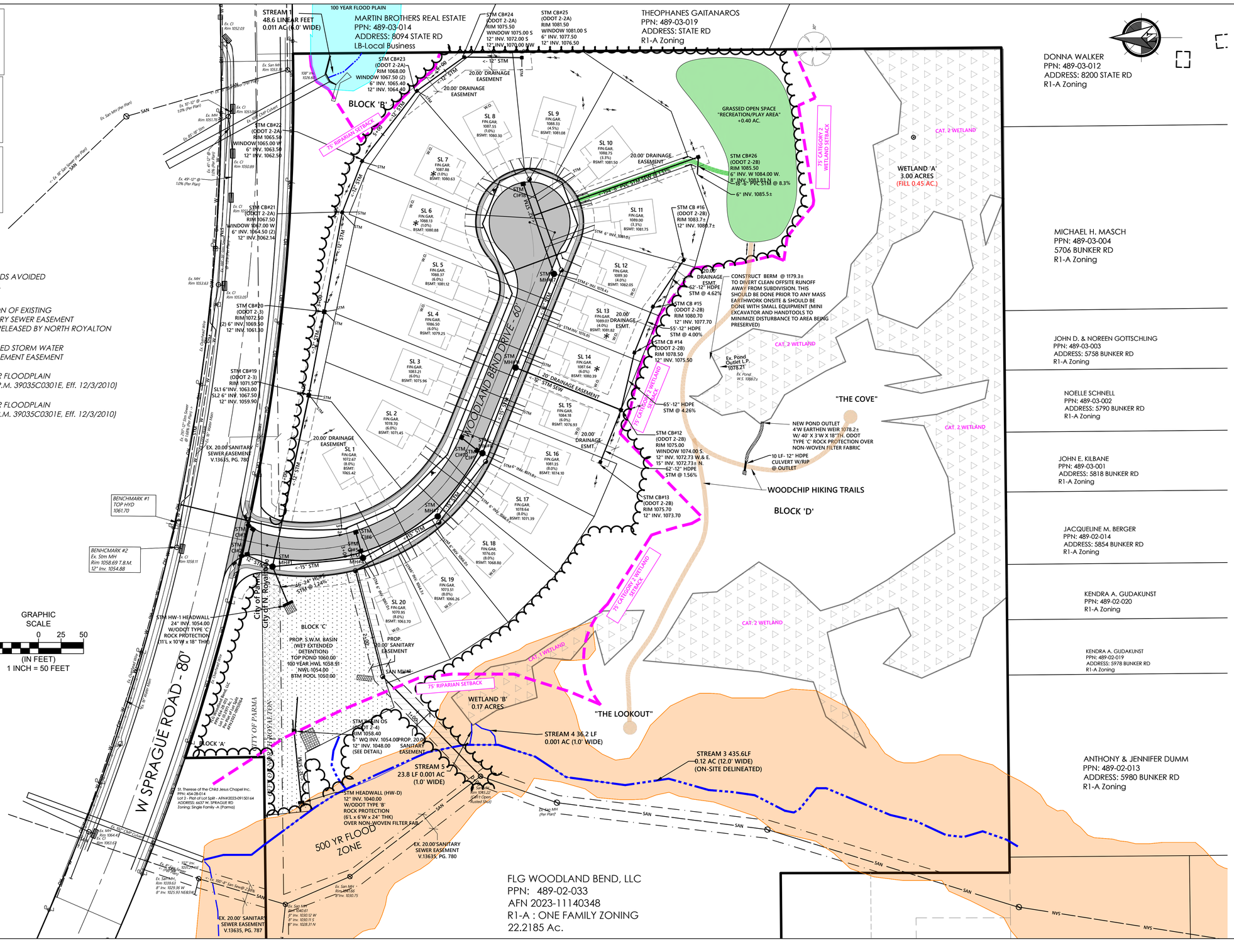


| BY | | | | | |
|---|---|---|---|---|---|
| DATE | | | | | |
| REV. No. | | | | | |

STATE OF OHIO KEVIN T. HOFFMAN 74831 REGISTERED PROFESSIONAL ENGINEER

DATE: 2/5/24 DRAWN: NMO
SCALE: HOR. 1"=50' VERT. 1"=50'
FOLDER: DWG/Proj. Engineering
FILENAME: Utility, SWP3, & Grading
TAB: 05-Utility Plan
BNDY. CHK: MPS
BASE. CHK: KTH

# WOODLAND BEND SUBDIVISION

CITY OF NORTH ROYALTON - CUYAHOGA COUNTY - OHIO


POLARIS ENGINEERING & SURVEYING, INC.
34600 CHARDON ROAD - SUITE D
WILLOUGHBY HILLS, OHIO 44094
(440) 944-4433 (440) 944-3722 (Fax)
www.polaris-es.com


## UTILITY PLAN

CONTRACT No. 22057

| SHEET | OF |
|---|---|
| 05 | 17 |

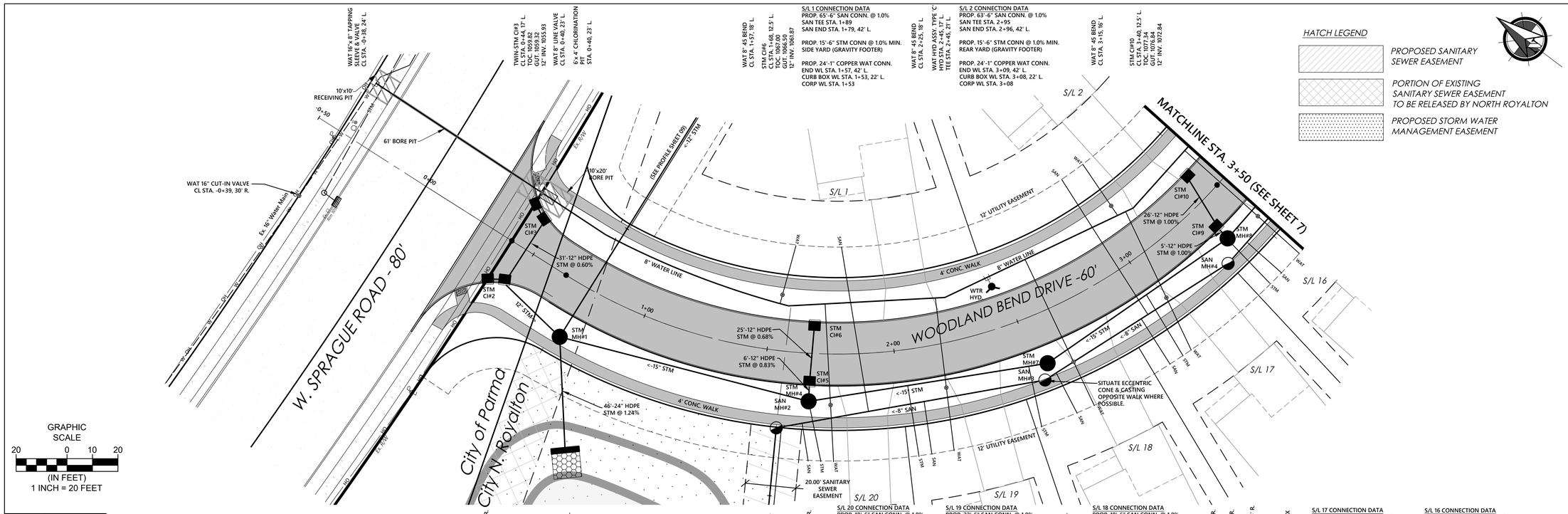


S/L 1 CONNECTION DATA
PROP. 65'-6" SAN CONN. @ 1.0%
SAN TEE STA. 1+89
SAN END STA. 1+79, 42' L.

PROP. 15'-6" STM CONN @ 1.0% MIN.
SIDE YARD (GRAVITY FOOTER)

PROP. 24'-1" COPPER WAT CONN.
END WL STA. 1+57, 42' L.
CURB BOX WL STA. 1+53, 22' L.
CORP WL STA. 1+53

WAT 8" 45 BEND CL STA. 1+57, 18' L.

STM CI#6 CL STA. 1+68, 12.5' L. TOC. 1067.00 GUT. 1066.50 12" INV. 1061.87

S/L 2 CONNECTION DATA
PROP. 63'-6" SAN CONN. @ 1.0%
SAN TEE STA. 2+95
SAN END STA. 2+96, 42' L.

PROP. 15'-6" STM CONN @ 1.0% MIN.
REAR YARD (GRAVITY FOOTER)

PROP. 24'-1" COPPER WAT CONN.
END WL STA. 3+09, 42' L.
CURB BOX WL STA. 3+08, 22' L.
CORP WL STA. 3+08

WAT 8" 45 BEND CL STA. 2+25, 18' L.

WAT HYD ASSY, TYPE 'C' HYD STA. 2+45, 17' L. TEE STA. 2+45, 21' L.

WAT 8" 45 BEND CL STA. 3+15, 16' L.

STM CI#10 CL STA. 3+40, 12.5' L. TOC. 1076.34 GUT. 1076.84 12" INV. 1072.84

S/L 20 CONNECTION DATA
PROP. 18'-6" SAN CONN. @ 1.0%
SAN TEE STA. 1+65
SAN END STA. 1+68, 42' R.

PROP. 24'-6" STM CONN @ 1.0% MIN.
END STA. 1+73, 42' R. (GRAVITY FTR)

PROP. 62'-1" COPPER WAT CONN.
END WL STA. 1+77, 42' R.
CURB BOX WL STA. 1+75, 20' R.
CORP WL STA. 1+72

S/L 19 CONNECTION DATA
PROP. 22'-6" SAN CONN. @ 1.0%
SAN TEE STA. 2+08
SAN END STA. 2+08, 42' R.

PROP. 28'-6" STM CONN @ 1.0% MIN.
END STA. 2+12, 42' R. (SUMP PUMP)

PROP. 60'-1" COPPER WAT CONN.
END WL STA. 2+16, 42' R.
CURB BOX WL STA. 2+17, 17' R.
CORP WL STA. 2+20

S/L 18 CONNECTION DATA
PROP. 18'-6" SAN CONN. @ 1.0%
SAN TEE STA. 2+55
SAN END STA. 2+55, 24' R.

PROP. 24'-6" STM CONN @ 1.0% MIN.
END STA. 2+46, 42' R. (SUMP PUMP)

PROP. 63'-1" COPPER WAT CONN.
END WL STA. 2+64, 42' R.
CURB BOX WL STA. 2+64, 23' R.
CORP WL STA. 2+63

S/L 17 CONNECTION DATA
PROP. 21'-6" SAN CONN. @ 1.0%
SAN TEE STA. 2+92
SAN END STA. 2+92, 42' R.

PROP. 28'-6" STM CONN @ 1.0% MIN.
END STA. 2+96, 42' R. (SUMP PUMP)

PROP. 60'-1" COPPER WAT CONN.
END WL STA. 3+00, 42' R.
CURB BOX WL STA. 3+04, 18' R.
CORP WL STA. 3+11

S/L 16 CONNECTION DATA
PROP. 18'-6" SAN CONN. @ 1.0%
SAN TEE STA. 3+33
SAN END STA. 3+35, 42' R.

PROP. 25'-6" STM CONN @ 1.0% MIN.
END STA. 3+40, 42' R. (SUMP PUMP)

PROP. 60'-1" COPPER WAT CONN.
END WL STA. 3+45, 42' R.
CURB BOX WL STA. 3+45, 20' R.
CORP WL STA. 3+45

TWIN-STM CI#2 CL STA. 0+44, 17' R. TOC. 1059.82 GUT. 1059.32 12" INV. 1055.72

CL RW MON BOX STA. 0+40.00

STM MH#1 CL STA. 0+75, 22' R.

CL PC MON BOX STA. 0+65.24

SAN MH #2 CL STA. 1+62, 26' R.

STM MH#4 CL STA. 1+68, 19' R.

STM CI#5 CL STA. 1+67, 12.5' R. TOC. 1066.94 GUT. 1066.44 12" INV. 1061.70

SAN MH #3 CL STA. 2+52, 25' R.

STM MH#7 CL STA. 2+55, 19' R.

SAN MH #4 CL STA. 3+28, 25' R.

STM MH#8 CL STA. 3+34, 17' R.

STM CI#9 CL STA. 3+35, 12.5' R. TOC. 1076.97 GUT. 1076.47 12" INV. 1072.99

CL PP MON BOX STA. 3+45.90

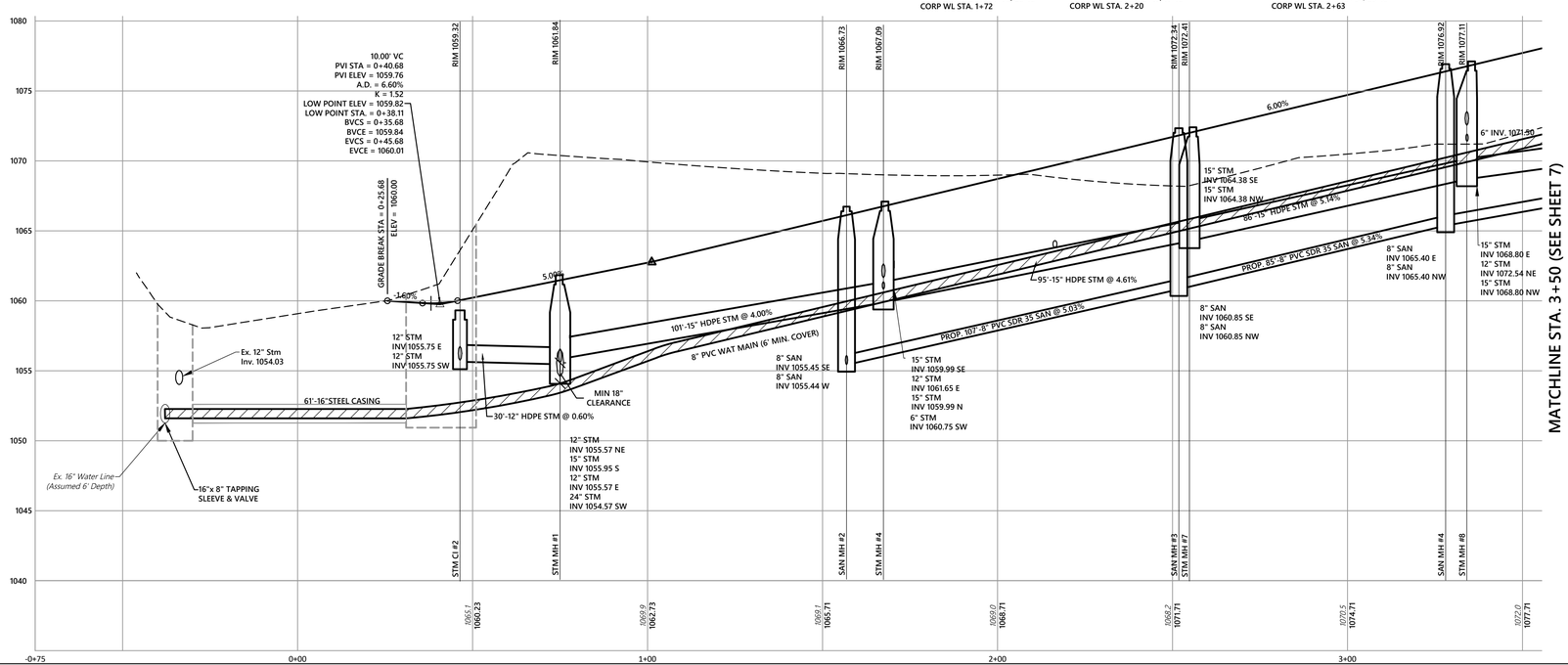


| BY | |
|---|---|
| KTH | |

STATE OF OHIO
KEVIN HOFFMAN
74831
REGISTERED
PROFESSIONAL ENGINEER

DATE: 2/5/24 DRAWN: NMO
SCALE: HOR. 1"=20' VERT. 1"=20'
FOLDER: DWG/Proj. Engineering
FILENAME: Utility, SWP3, & Grading
TAB: 06-P&P
BNDY. CHK: MPS
BASE. CHK: KTH

# WOODLAND BEND SUBDIVISION

CITY OF NORTH ROYALTON - CUYAHOGA COUNTY - OHIO


POLARIS ENGINEERING & SURVEYING, INC.
34600 CHARDON ROAD - SUITE D
WILLOUGHBY HILLS, OHIO 44094
(440) 944-4433 (440) 944-3722 (Fax)
www.polaris-es.com


polaris Engineering & Surveying

## PLAN & PROFILE

WOODLAND BEND STA. 0+00 to 3+50

CONTRACT No.
22057

| SHEET | OF |
|---|---|
| 06 | 17 |

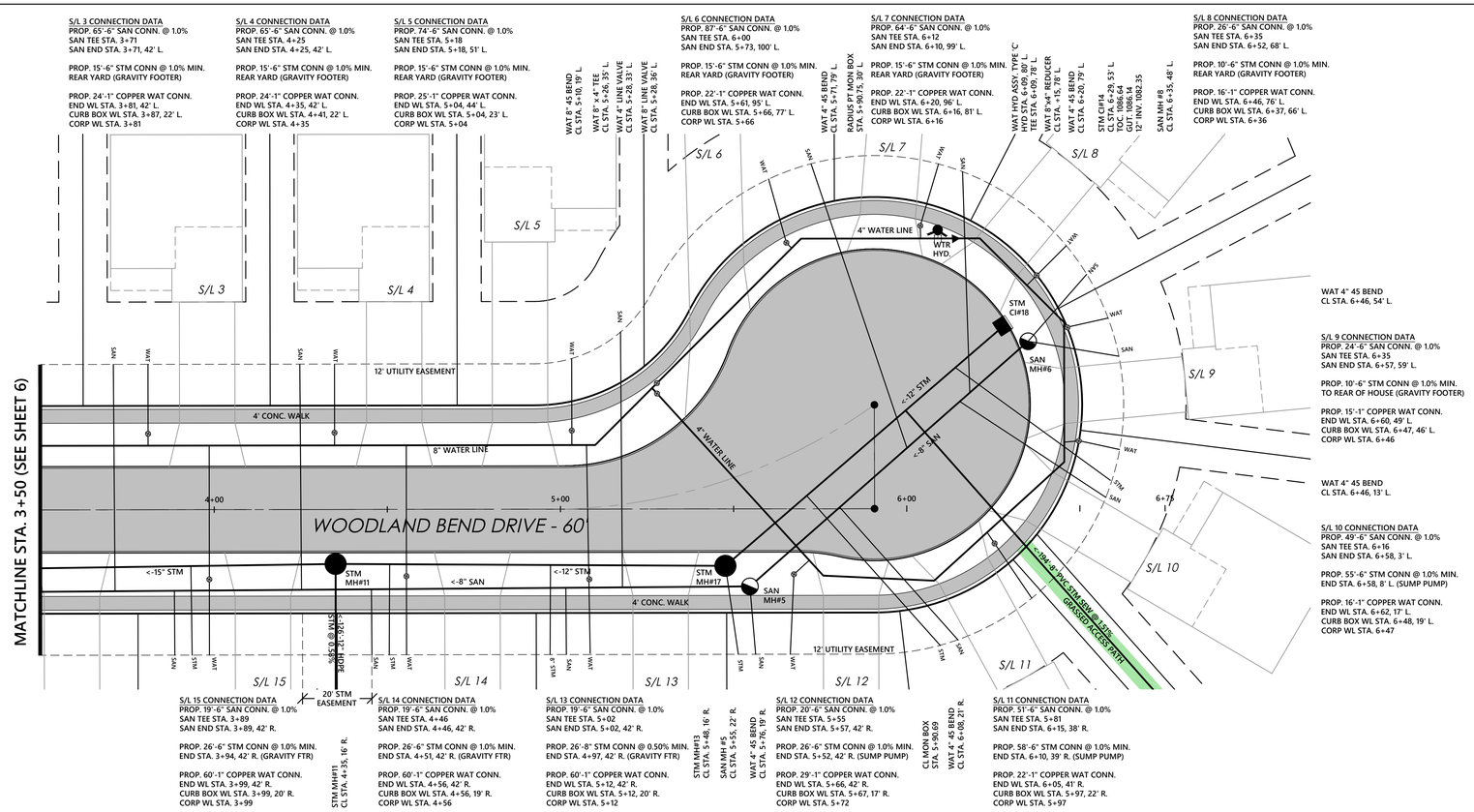


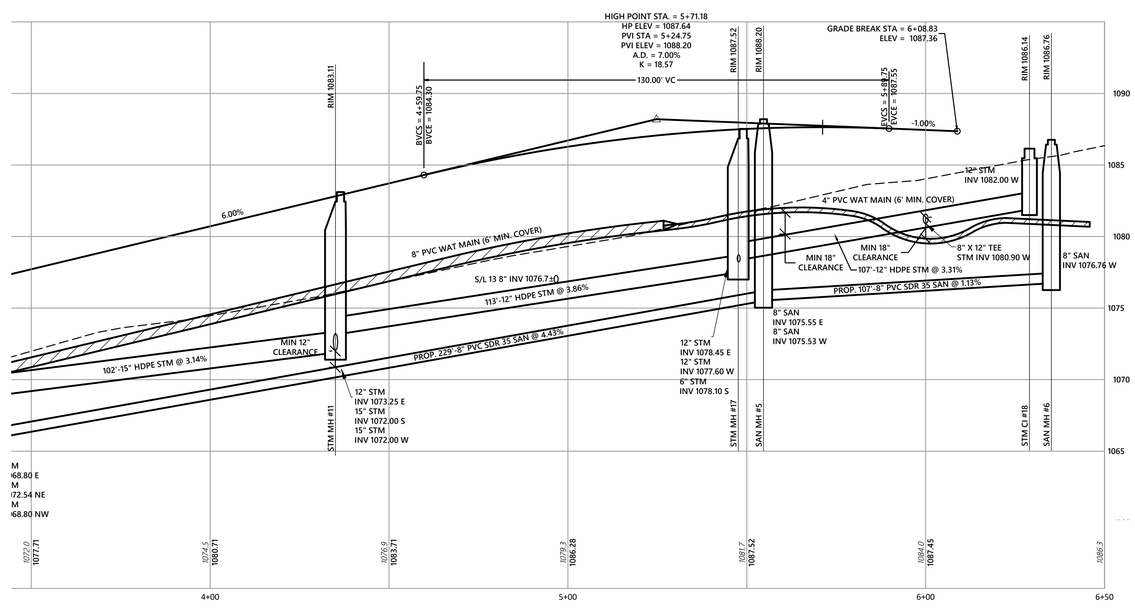


GRAPHIC SCALE
20 0 10 20
(IN FEET)
1 INCH = 20 FEET

| REV | BY |
|---|---|
| | |

STATE OF OHIO
KEVIN HOFFMAN
74831
REGISTERED
PROFESSIONAL ENGINEER

DATE: 2/27/24 DRAWN: NMO
SCALE: HOR. 1"=20' VERT. 1"=20'
FOLDER: DWG/Proj. Engineering
FILENAME: Utility, SWP3, & Grading
TAB: 07-P&P
BNDY. CHK: MPS
BASE. CHK: KTH

# WOODLAND BEND SUBDIVISION

CITY OF NORTH ROYALTON - CUYAHOGA COUNTY - OHIO

POLARIS ENGINEERING & SURVEYING, INC.
34600 CHARDON ROAD - SUITE D
WILLOUGHBY HILLS, OHIO 44094
(440) 944-4433 (440) 944-3722 (Fax)
www.polaris-es.com

polaris Engineering & Surveying

## PLAN & PROFILE

WOODLAND BEND STA. 3+50 to END

CONTRACT No.
22057

| SHEET | OF |
|---|---|
| 07 | 17 |

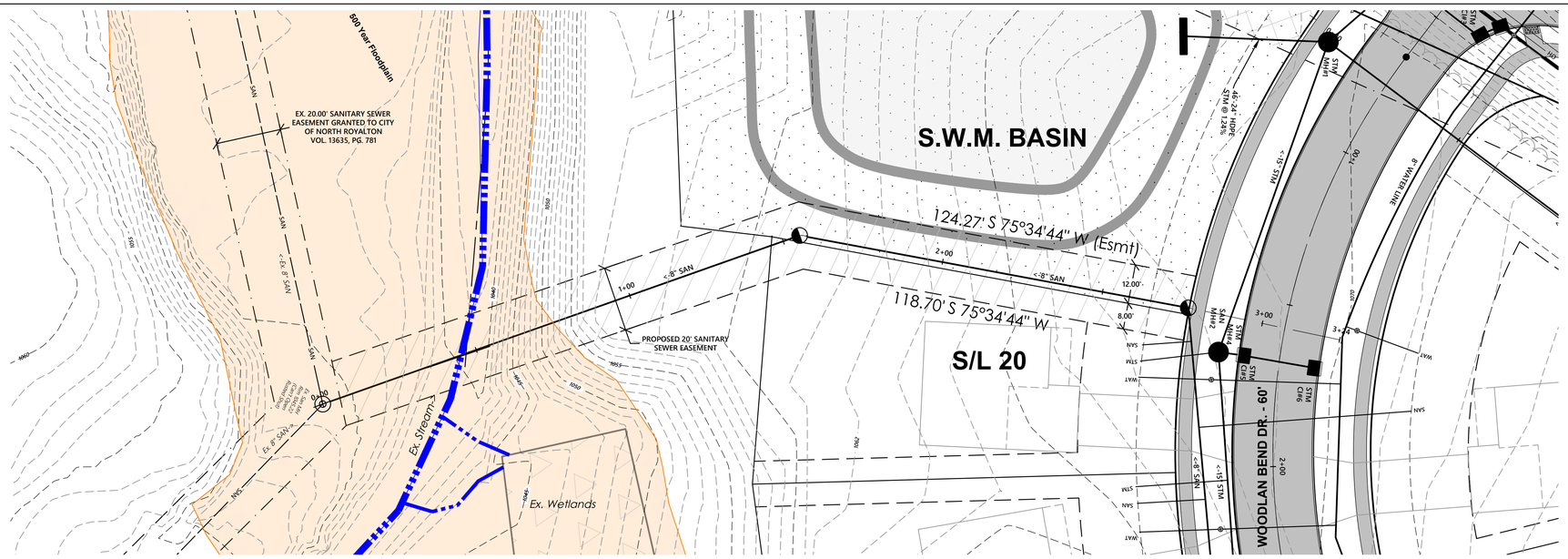


LEGEND

PROPOSED STORM WATER MANAGEMENT EASEMENT

WETLANDS AVOIDED 2.72 AC.

GRAPHIC SCALE

20 0 10 20

(IN FEET)
1 INCH = 20 FEET

## SANITARY SEWER PROFILE

| REV. No. | DATE | BY |
|---|---|---|
| | | |

STATE OF OHIO
KEVIN T. HOFFMAN
74831
REGISTERED
PROFESSIONAL ENGINEER

DATE: 2/5/24 DRAWN: NMO
SCALE: HOR. 1"=20' VERT. 1"=20'
FOLDER: DWG/Proj. Engineering
FILENAME: Utility, SWP3, & Grading
TAB: 08-Sanitary Profile
BNDY. CHK: MPS
BASE. CHK: KTH

# WOODLAND BEND SUBDIVISION

CITY OF NORTH ROYALTON - CUYAHOGA COUNTY - OHIO


POLARIS ENGINEERING & SURVEYING, INC.
34600 CHARDON ROAD - SUITE D
WILLOUGHBY HILLS, OHIO 44094
(440) 944-4433 (440) 944-3722 (Fax)
www.polaris-es.com


polaris Engineering & Surveying

## PLAN & PROFILE
SANITARY SEWER

CONTRACT No.
22057

| SHEET | OF |
|---|---|
| 08 | 17 |

# REAR YARD STORM SEWER PROFILE (0+00 to 4+25)

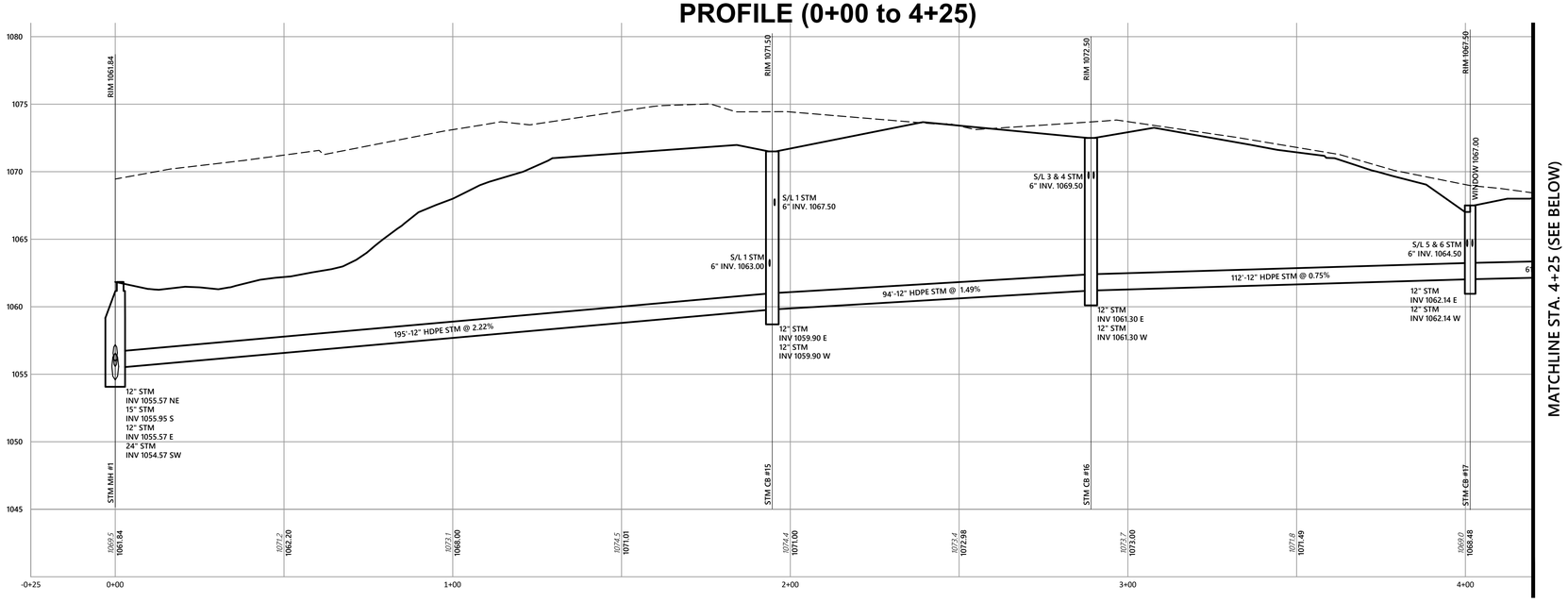


GRAPHIC SCALE

20 0 10 20

(IN FEET)
1 INCH = 20 FEET

# REAR YARD STORM SEWER PROFILE (4+25 to End)

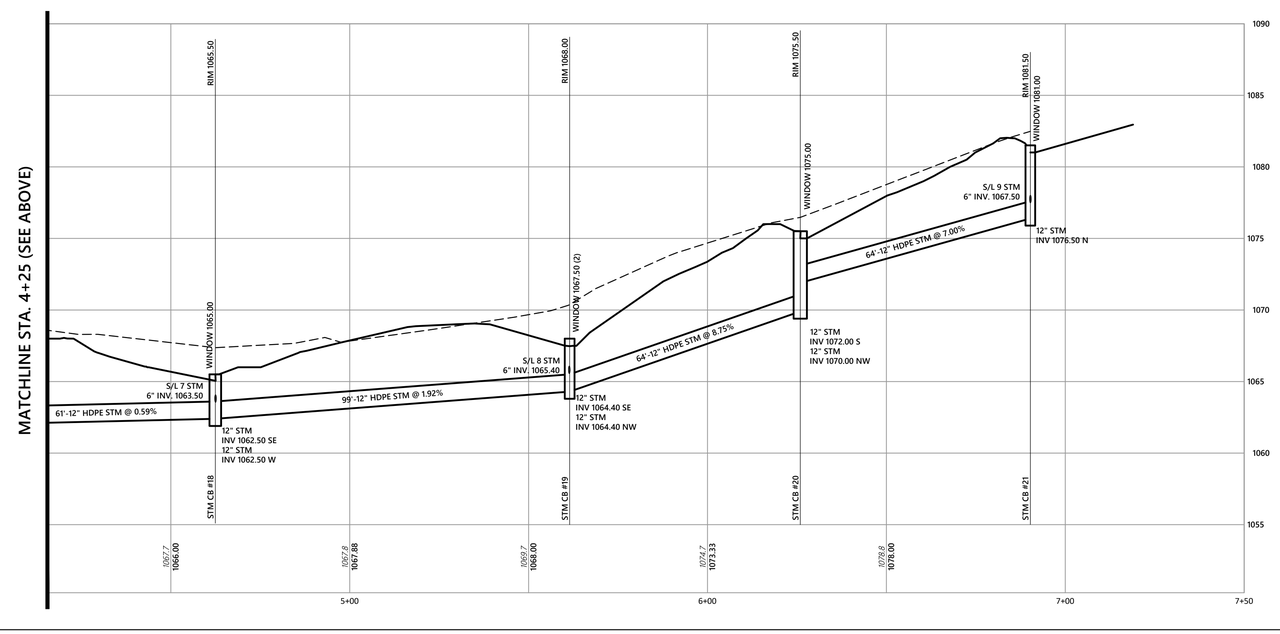


| BY | | | | | |
|---|---|---|---|---|---|
| DATE | | | | | |
| REV. No. | | | | | |

STATE OF OHIO
KEVIN T. HOFFMAN
74831
REGISTERED
PROFESSIONAL ENGINEER

DATE: 2/5/24 DRAWN: NMO
SCALE: HOR. 1"=20' VERT. 1"=20'
FOLDER: DWG/Proj. Engineering
FILENAME: Utility, SWP3, & Grading
TAB: 09-Offsite Storm Profile
BNDY. CHK: MPS
BASE. CHK: KTH

# WOODLAND BEND SUBDIVISION

CITY OF NORTH ROYALTON - CUYAHOGA COUNTY - OHIO


POLARIS ENGINEERING & SURVEYING, INC.
34600 CHARDON ROAD - SUITE D
WILLOUGHBY HILLS, OHIO 44094
(440) 944-4433 (440) 944-3722 (Fax)
www.polaris-es.com


polaris Engineering & Surveying

## PLAN & PROFILE

REAR STORM SEWER

CONTRACT No.

22057

| SHEET | OF |
|---|---|
| 09 | 17 |

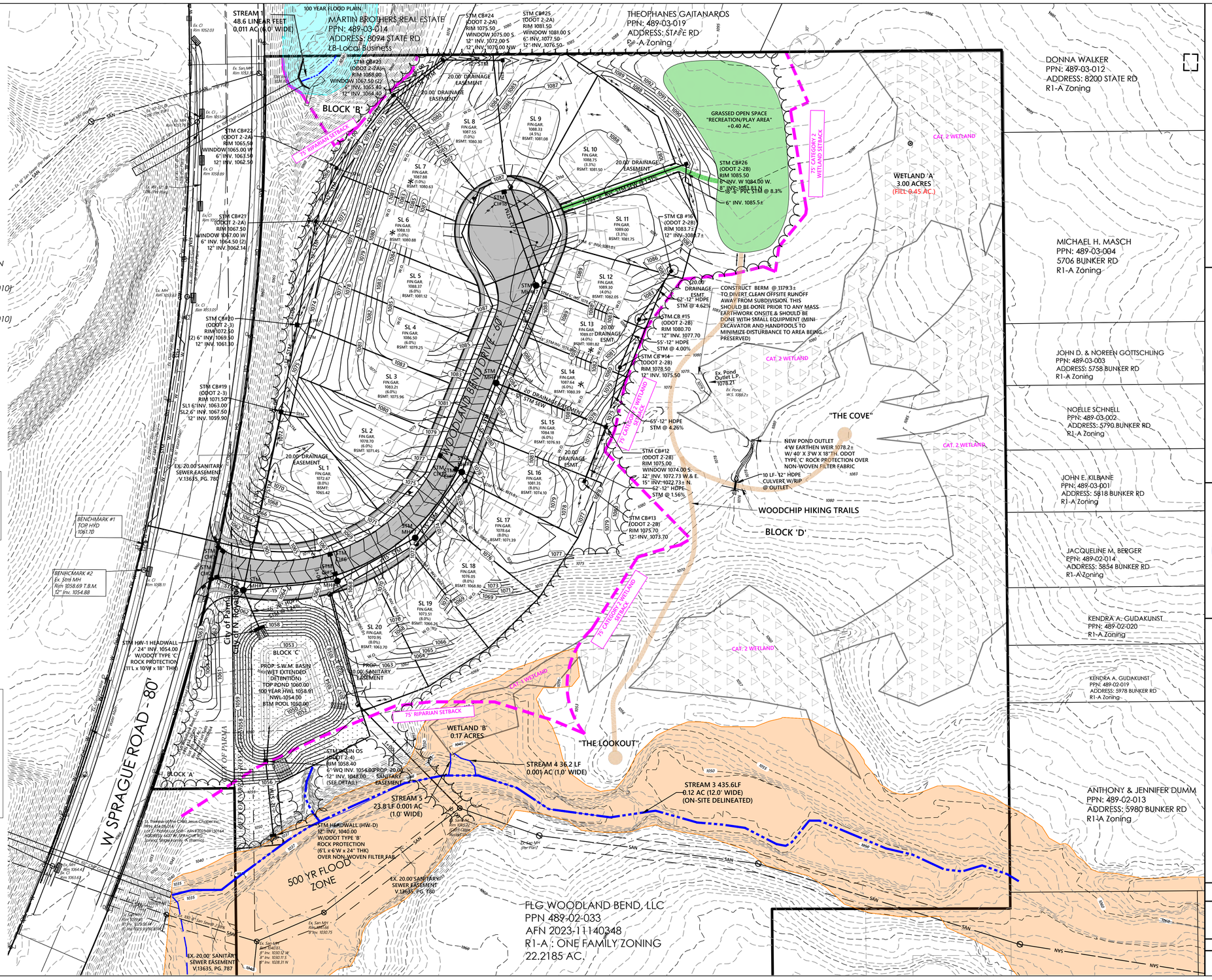


HATCH LEGEND

- WETLANDS AVOIDED 2.72 AC.
- PROPOSED STORM WATER MANAGEMENT EASEMENT
- PORTION OF EXISTING SANITARY SEWER EASEMENT TO BE RELEASED BY NORTH ROYALTON
- 100 YEAR FLOODPLAIN (PER F.I.R.M. 39035C0301E, Eff. 12/3/2010)
- 500 YEAR FLOODPLAIN (PER F.I.R.M. 39035C0301E, Eff. 12/3/2010)

| REV. No. | DATE | BY |
|---|---|---|
| | | |

* DENOTES PARCELS REQUIRING ENGINEERED FILL TO BOTTOM OF FOOTER ELEVATION (1FT BELOW BASEMENT FLOOR FOR STANDARD DWELLINGS OR 42" BELOW BASEMENT FLOOR FOR WALKOUT DWELLINGS

NOTE: ALL DOWNSPOUTS TO CONNECT TO STORM SEWER SYSTEM. SEE PLAN AND PROFILE SHEET CONNECTION CALLOUTS AS TO WHETHER SUMP PUMPS ARE REQUIRED FOR EACH HOUSE.

NOTE: WHERE SUBLOT YARD DRAINS ARE PROPOSED, THE HOUSE CONNECTION SHALL NOT BE TIED INTO THE YARD DRAIN LINE. MAINTAIN SEPARATE LINES AND WYE TOGETHER AT THE FRONT UTILITY EASEMENT.

NOTE: DUE TO TOPOGRAPHIC CONSTRAINTS, YARD DRAINS WILL NOT BE INSTALLED ON LOTS 17-20. REAR YARD RUNOFF SHALL SHEETFLOW INTO TO THE ADJACENT WOODS THAT WILL BE MAINTAINED AND WILL ACT AS A VEGETATED FILTER STRIP. NOTE REAR DOWNSPOUTS FOR THESE LOTS MUST BE TIED INTO THE STORM CONNECTION AT THE STREET.

STATE OF OHIO
KEVIN HOFFMAN
74831
REGISTERED
PROFESSIONAL ENGINEER

DATE: 2/27/24 DRAWN: NMO
SCALE: HOR. 1"=50' VERT. 1"=50'
FOLDER: DWG/Proj. Engineering
FILENAME: Utility, SWP3, & Grading
TAB: 10-Final Grading
BNDY. CHK: MPS
BASE. CHK: KTH

# WOODLAND BEND SUBDIVISION

CITY OF NORTH ROYALTON - CUYAHOGA COUNTY - OHIO


POLARIS ENGINEERING & SURVEYING, INC.
34600 CHARDON ROAD - SUITE D
WILLOUGHBY HILLS, OHIO 44094
(440) 944-4433 (440) 944-3722 (Fax)
www.polaris-es.com


polaris Engineering & Surveying

## FINAL GRADING & S.W.M. PLAN

| CONTRACT No. |
|---|
| 22057 |

| SHEET | OF |
|---|---|
| 10 | 17 |

## Wet Extended Detention Basin WQv Compliance Tool

version 3.2 2020-07-07

### Project Summary

| | |
|---|---|
| Project Name: | Woodland Bend Subdivision |
| Subwatershed ID/Label: | Woodland Bend Basin |
| Submitted by: | Kevin Hoffman, P.E. |
| Date: | 1/25/2023 |

| | | | | | |
|---|---|---|---|---|---|
| Subwatershed Drainage Area, $A_{total}$ = | 6.66 | acres | = | 290,110 | ft2 |
| Subwatershed Impervious Area, $A_{imp}$ = | 2.01 | acres | = | 87,556 | ft2 |
| Imperviousness fraction, i = | 0.30 | | | 30 | % |
| Water Quality Volume, WQv = | 6,998 | $ft^3$ | = | 0.16 | ac-ft |

### Step 1 - Soil Suitability

Soil Series: MgB, EIC, EIF, EIB — HSG: D

### Step 2 - Wet ED Basin Volume Requirements

| | | |
|---|---|---|
| Extended Detention Volume, EDv = | 6998 | $ft^3$ |
| Minimum Sediment Storage Volume, $V_{sediment}$ = | 1400 | $ft^3$ |
| Minimum Permanent Pool Volume, PPv = | 8397 | $ft^3$ |

### Step 3 - Basin Stage-Storage Relationship

| | Elevation ft | Area $ft^2$ | Incremental Volume $ft^3$ | Cumulative Volume $ft^3$ |
|---|---|---|---|---|
| Bottom of Permanent Micropool = | 1050.00 | 2606 | | |
| | 1051.00 | 3290 | 2,941 | 2,941 |
| | 1052.00 | 4059 | 3,668 | 6,609 |
| | 1053.00 | 4890 | 4,468 | 11,077 |
| | 1054.00 | 5053 | 6,406 | 17,483 |
| | 1055.00 | 9126 | 8,584 | 26,067 |
| | 1056.00 | 10257 | 9,686 | 35,753 |
| | 1057.00 | 11443 | 10,845 | 46,598 |
| | 1058.00 | 12687 | 12,060 | 58,657 |
| | 1059.00 | 13986 | 13,331 | 71,989 |
| | 1060.00 | 15343 | 14,659 | 86,648 |

### Step 4 - Outlet Elevations and Storage Volumes

| | | | | |
|---|---|---|---|---|
| WQ Orifice Invert Elevation = | 1054.00 | | | |
| Elevation of Top of EDv = | 1054.83 | | | |
| Secondary Outlet Invert Elevation = | 1054.83 | | | OKAY |
| WQ Treatment Volume Provided, $V_{treatment}$ = | 7,048 | $ft^3$ | | |
| Treatment Vol Provided Relative to EDv, $V_{treatment}$/EDv = | 1.01 | | = | 101% OKAY |
| Permanent Pool Volume Provided, PPv = | 17,483 | $ft^3$ | | |
| Ratio PPv Provided to PPv Required = | 2.08 | | = | 208% OKAY |

### Step 5 - Outlet (Orifice) Sizing

| | | | | | |
|---|---|---|---|---|---|
| Maximum Hydraulic Head, Hmax = | 0.83 | ft | | | |
| Orifice Coefficient, C = | 0.6 | | | | |
| Target (Minimum) Draw-down Time, $T_d$ = | 24 | hr | | | |
| Target Average Discharge, $Q_{avg}$ = | 0.08 | cfs | | | |
| Average Hydraulic Head, $H_{avg}$ = | 0.41 | ft | | | |
| Estimated Orifice Area, $A_{orifice}$ = | 3.76 | $in^2$ | = | 0.026 | $ft^2$ |
| Estimated Orifice Diameter, $D_{orifice}$ = | 2.19 | in | = | 0.18 | ft |
| Design Orifice Diameter, $D_{orifice}$ = | 2.50 | in | = | 0.21 | ft |
| Design Orifice Area, $A_{orifice}$ = | 4.88 | $in^2$ | = | 0.034 | $ft^2$ |
| Time to Completely Drain EDv, $T_d$ = | 31 | hr | must be ≥ 24 hr | | OKAY |
| Volume Drained in First 8 hr = | 3,410 | $ft^3$ | | | |
| % of EDv = | 48.7 | % | must be ≤ 50% | | OKAY |

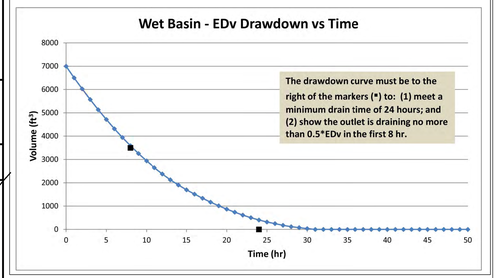


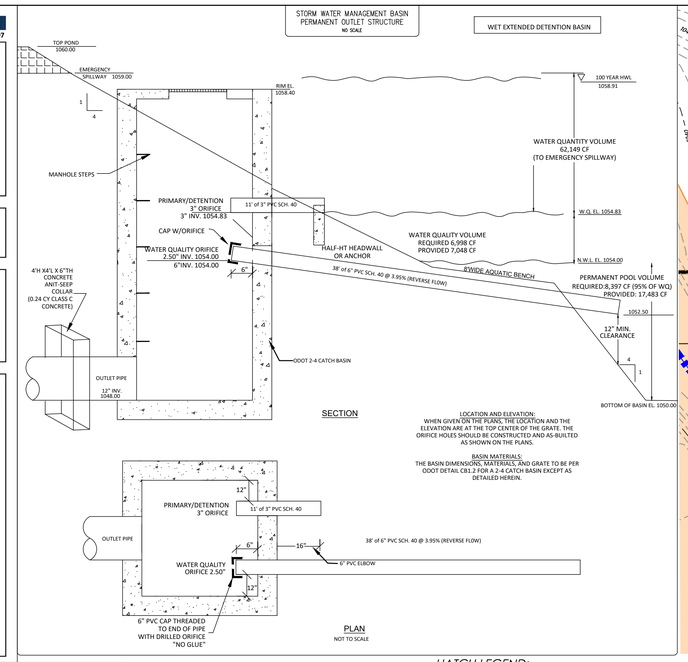


HATCH LEGEND:

- 500 YEAR FLOODPLAIN (PER F.I.R.M. 39035C0301E. Eff. 12/3/2010)
- PROPOSED STORM WATER MANAGEMENT EASEMENT
- PORTION OF EXISTING SANITARY SEWER EASEMENT TO BE RELEASED BY NORTH ROYALTON

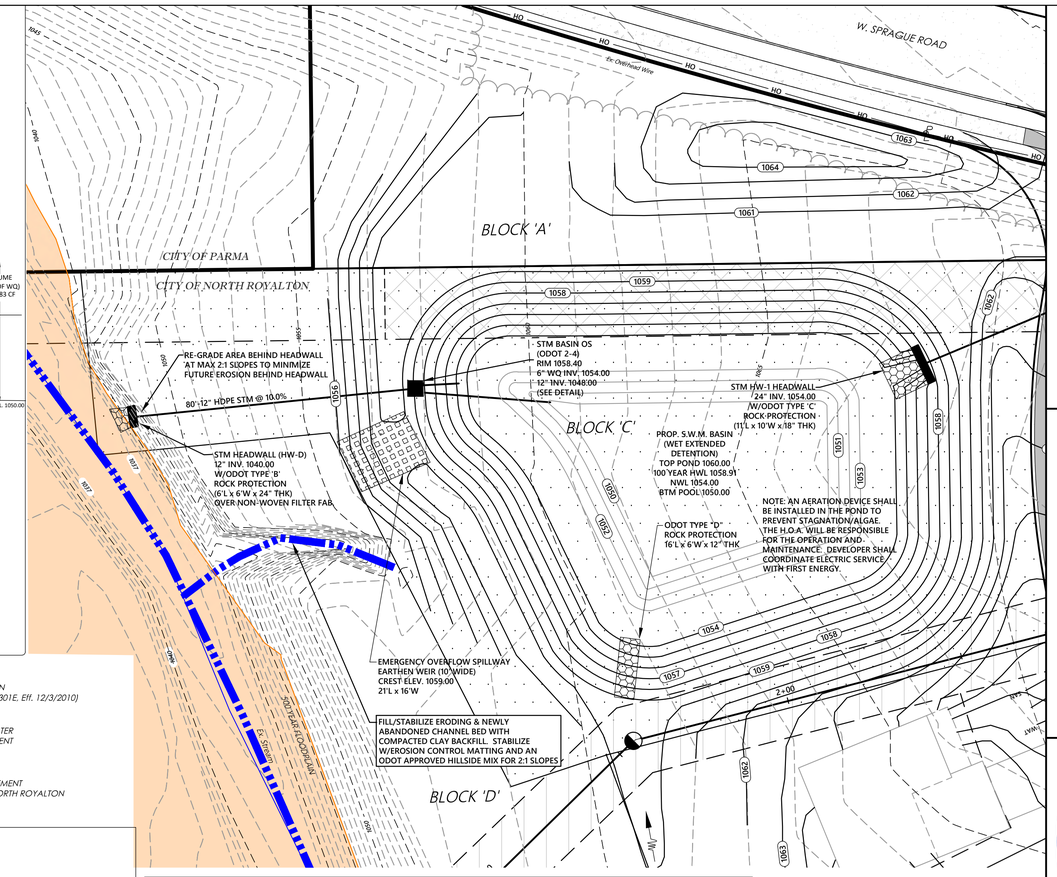


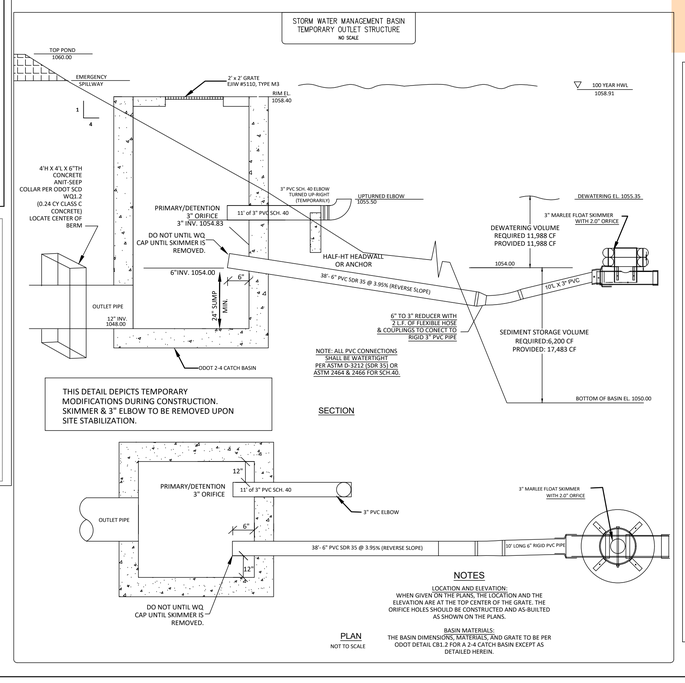


PROJECT: Woodland Bend Subdivision

PROJECT NO. 22057 SHEET NO. 1 OF 1

SUBJECT: TEMPORARY Sediment Basin Calculation

| | | | | | |
|---|---|---|---|---|---|
| **Sediment Storage Volume** | | | | | |
| Total Disturbed Area: | A | = | 6.20 | Acres | |
| Required Sediment Storage Volume: | $S_r$ | = | 1000 | CF/Acre | |
| | | = | 6200 | CF | |
| Provided Sediment Storage Volume: | Sv | = | 17,483 | CF | Within Wet Pool |
| **Dewatering Storage Volume** | | | | | |
| Total Watershed Area | A | = | 6.66 | Acres | |
| Required Dewatering Volume: | $D_r$ | = | 1800 | CF/Acre | |
| | | = | 11988 | CF | (Between Elev. 1054.00-1055.35) |
| Provided Dewatering Volume: | Dv | = | 11988 | CF | (Between Elev. 1054.00-1055.35) |
| **Marelee Float Skimmer Sizing** | | | | | |
| Head | H | = | 1.35 | FT | (Between Elev. 1054.00-1055.35) |
| Skimmer Size | | = | 3 | IN | |
| Skimmer Orifice | | = | 2 | IN | |
| Drawdown Rate | | = | 5793 | CFD | (interpolated From Table on Skimmer Detail) |
| Calculated Draindown | | = | 11988 / 5793 | = | 2.069 Days = 50 Hours Good |
| Draindown time to be greater than 48 hrs & Less than 168 hrs | | | | | |

GRAPHIC SCALE

20 0 10 20

(IN FEET)
1 INCH = 20 FEET

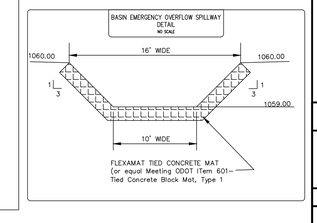


| REV. No. | DATE | BY |
|---|---|---|
| | | |

STATE OF OHIO KEVIN HOFFMAN 74831 REGISTERED PROFESSIONAL ENGINEER

DATE: 2/5/24 DRAWN: NMO

SCALE: HOR. 1"=20' VERT. 1"=20'

FOLDER: DWG/Proj. Engineering

FILENAME: Utility, SWP3, & Grading

TAB: 11-SWM Basin

BNDY. CHK: MPS

BASE. CHK: KTH

# WOODLAND BEND SUBDIVISION

CITY OF NORTH ROYALTON - CUYAHOGA COUNTY - OHIO


POLARIS ENGINEERING & SURVEYING, INC.
34600 CHARDON ROAD - SUITE D
WILLOUGHBY HILLS, OHIO 44094
(440) 944-4433 (440) 944-3722 (Fax)
www.polaris-es.com


## S.W.M. BASIN DETAIL

CONTRACT No. 22057

| SHEET | OF |
|---|---|
| 11 | 17 |

## SWP3 Site Description

| | |
|---|---|
| Previous Land Use: | Vacant |
| Development Type: | Residential |
| Total Site Acreage: | 22.21 Ac. |
| Total Site Disturbance: | 6.85 Ac. |
| Pre-Developed Impervious Area: | 0 Ac. (0%) |
| Pre-Developed Pervious Area: | 22.21 Ac. (100%) |
| Pre-Developed Curve Number | 72.4 |
| Post Developed Impervious Area: | 2.01 Ac. (9%) |
| Post Developed Pervious Area: | 20.20 Ac. (91%) |
| Post Developed Curve Number: | 85.4 |
| Predominant Soil(s) & Hydraulic Group(s): | Mahoning - Group D<br>Ellsworth - Group C/D<br>Orrville - Group C/D |
| First Receiving Water Body: | Big Creek |
| Subsequent Receiving Water Body: | Cuyahoga River |
| Water Resources w/in 200' of Site: | Yes, Wetlands and Streams as Shown on Plans |

** DENOTES PARCELS REQUIRING ENGINEERED FILL TO BOTTOM OF FOOTER ELEVATION (1FT BELOW BASEMENT FLOOR FOR STANDARD DWELLINGS OR 42" BELOW BASEMENT FLOOR FOR WALKOUT DWELLINGS*

### WETLAND LEGEND

- WETLANDS AVOIDED 2.72 AC.
- WETLAND IMPACT 0.45 AC.
- STREAM IMPACT (624 LF =0.028 AC.)

### SWP3 LEGEND

- I.P. — INLET PROTECTION
- 987 — PROPOSED CONTOUR
- 987 — EXISTING CONTOUR
- DISTURBANCE LIMITS
- SILT FENCE
- SOIL DELINEATION LINE
- MgB — SOIL TYPE
- TEMPORARY SEEDING
- MISC. BMP (Waste Disposal/Dumpster/Conc. Washout/Fuel Tanks)
- STONE CONSTRUCTION ENTRANCE
- ROCK CHANNEL PROTECTION
- TEMPORARY DIVERSION SWALE
- CLEARING LIMITS

GRAPHIC SCALE
50 0 25 50
(IN FEET)
1 INCH = 50 FEET

### HATCH LEGEND

- *PROPOSED STORM WATER MANAGEMENT EASEMENT*
- *100 YEAR FLOODPLAIN (PER F.I.R.M. 39035C0301E, Eff. 12/3/2010)*
- *500 YEAR FLOODPLAIN (PER F.I.R.M. 39035C0301E, Eff. 12/3/2010)*

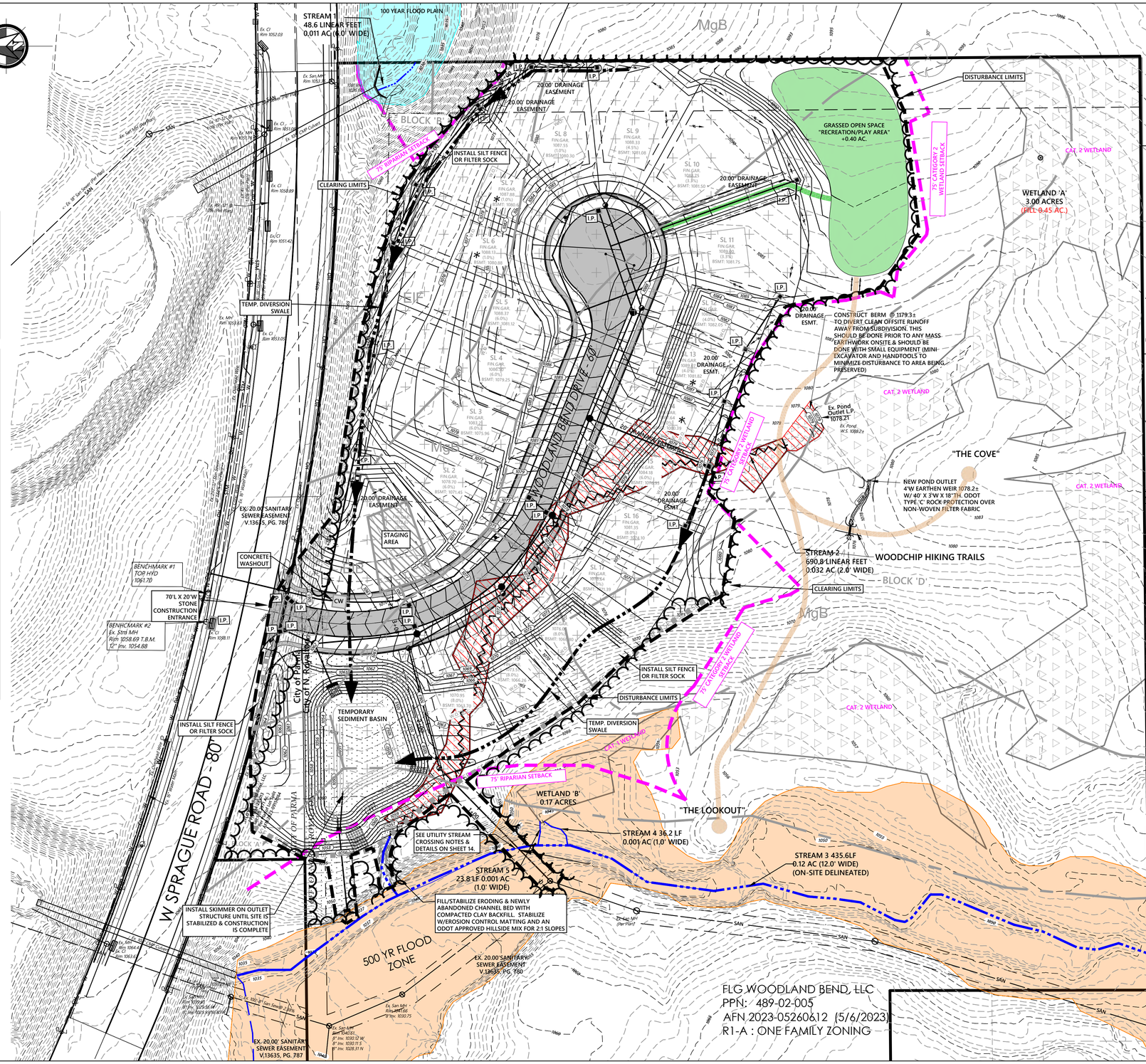


| DATE | BY |
|---|---|
| | |

| REV. No. |
|---|
| |

STATE OF OHIO KEVIN T. HOFFMAN 74831 REGISTERED PROFESSIONAL ENGINEER

DATE: 2/27/24 DRAWN: NMO
SCALE: HOR. 1"=50' VERT. 1"=50'
FOLDER: DWG/Proj. Engineering
FILENAME: Utility, SWP3, & Grading
TAB: 12-SWP3 Plan
BNDY. CHK: MPS
BASE. CHK: KTH

# WOODLAND BEND SUBDIVISION

CITY OF NORTH ROYALTON - CUYAHOGA COUNTY - OHIO


POLARIS ENGINEERING & SURVEYING, INC.
34600 CHARDON ROAD - SUITE D
WILLOUGHBY HILLS, OHIO 44094
(440) 944-4433 (440) 944-3722 (Fax)
www.polaris-es.com


polaris Engineering & Surveying

# MASS GRADING & SWP3 PLAN

CONTRACT No. 22057

SHEET 12 OF 17

## NATIONAL POLLUTION DISCHARGE ELIMINATION SYSTEM (NPDES) PERMIT INFORMATION

NPDES PERMIT (OHC00006) #_____

PERMITEE (DEVELOPER) _____

CO-PERMITEE (CONTRACTOR)_____

## GENERAL EROSION AND SEDIMENT CONTROL NOTES

EROSION CONTROL SHALL CONSIST OF TEMPORARY CONTROL MEASURES AS DETAILED ON THE PLANS OR ORDERED BY THE GOVERNING AGENCY DURING THE LIFE OF THE CONTRACT TO CONTROL SOIL EROSION AND SEDIMENTATION THROUGH USE OF EROSION CONTROL PERMANENT BEST MANAGEMENT PRACTICES (BMP'S).

ADDITIONAL EROSION CONTROL BMP'S MAY BE MANDATED BY THE GOVERNING AGENCY AT ANY TIME DURING THIS PROJECT AS UNFORSEEN SITUATIONS MAY ARISE THAT WARRANT FURTHER EROSION AND SEDIMENT CONTROL PRACTICES.

TEMPORARY EROSION AND SEDIMENT CONTROL ITEMS, THE LOCATION AND SIZE OF WHICH ARE DETAILED ON THE PLANS, SHALL BE INSTALLED BY THE CONTRACTOR PRIOR TO COMMENCEMENT OF ANY CLEARING OR EARTHWORK OPERATIONS. CONDITIONS THAT REQUIRE ADDITIONAL OR MODIFIED TEMPORARY OR PERMANENT BMP'S SHALL BE APPROVED BY THE DESIGN ENGINEER AND REFLECTED ON THE REVISED STORM WATER POLLUTION PREVENTION PLAN (SWP3).

SEDIMENT BASINS, SEDIMENT TRAPS, AND PERIMETER SEDIMENT CONTROLS, SHALL BE IMPLEMENTED AS THE FIRST STEP OF GRADING AND WITHIN 7 DAYS FROM THE START OF GRUBBING. THEY SHALL CONTINUE TO FUNCTION UNTIL DISTURBED AREAS ARE RE-ESTABLISHED WITH TEMPORARY VEGETATION. NO SEDIMENT CONTROLS SHALL BE PLACED IN A STREAM.

TRENCH DEWATERING OR GROUND WATER, WHICH CONTAINS SEDIMENT SHALL PASS THROUGH A SEDIMENT SETTLING BASIN OR EQUALLY EFFECTIVE SEDIMENT CONTROL DEVICE. ALTERNATIVES MAY INCLUDE DEWATERING INTO SUMP PIT, FILTER BAG OR EXISITING VEGETATED UPSLOPE AREA. SEDIMENT LADEN WATER SHALL NOT BE DISCHARGED TO STREAMS OR THE STORM SEWER SYSTEM.

THE SWP3, NOTES, DETAILED DRAWINGS AND ANY ADDENDUMS ARE INTENDED TO SERVE AS BASIC GUIDELINES. ALL EROSION CONTROL PRACTICES SHALL MEET THE STANDARDS AND SPECIFICATIONS OF THE OHIO DEPARTMENT OF NATURAL RESOURCES (ODNR) RAINWATER AND LAND DEVELOPMENT MANUAL AND THE NDPES STORM WATER DISCHARGE PERMIT.

ALL CAST IRON CATCH BASINS, GRATES AND INLET COVERS SHALL HAVE THE MESSAGE "DUMP NO WASTE, DRAINS TO WATERWAYS".

## SWP3 INSPECTION & MAINTENANCE NOTES

INSPECTION REQUIREMENTS (DURING CONSTRUCTION)
ALL STORMWATER CONTROLS ON THE SITE ARE INSPECTED BY A QUALIFIED PROFESSIONAL AT LEAST ONCE EVERY SEVEN CALENDAR DAYS AND WITHIN 24 HOURS AFTER ANY STORM EVENT GREATER THAN ONE-HALF INCH OF RAIN PER 24 HOUR PERIOD. A WRITTEN RECORD DOCUMENTING THE RESULTS OF THESE INSPECTIONS MUST BE CREATED AND MAINTAINED WITH THE SWP3. THE INSPECTION CHECKLIST SHALL BE COMPLETED AND SIGNED BY THE INSPECTOR AFTER EVERY INSPECTION. IF THE SITE WILL BE DORMANT FOR A LONG PERIOD AND THE SITE HAS BEEN STABILIZED, A WAIVER REQUEST MAY BE SUBMITTED TO THE OEPA TO REDUCE THE INSPECTION FREQUENCY TO EVERY MONTH. RECORDS SHALL BE MAINTAINED FOR 3 YEARS AFTER TERMINATION OF CONSTRUCTION ACTIVITIES. SWP3 AREAS TO BE INSPECTED INCLUDE DISTURBED AREAS, MATERIAL STORAGE AREAS, EROSION AND SEDIMENT CONTROLS, DISCHARGE LOCATIONS; AND VEHICLE ENTRANCE/EXIT LOCATIONS.

SWP3 INSPECTION CHECKLIST
THE SWP3 INSPECTION CHECKLIST (TO BE COMPLETED AND SIGNED AFTER EVERY INSPECTION) THAT INCLUDES:

- THE INSPECTION DATE, NAMES, TITLES, AND QUALIFICATIONS OF INSPECTORS
- WEATHER FOR THE PERIOD SINCE THE LAST INSPECTION (E.G., BEGINNING, DURATION, & RAINFALL MOUNT OF EACH STORM EVENT AND WHETHER A DISCHARGE OCCURRED)
- WEATHER AND A DESCRIPTION OF ANY DISCHARGES OCCURING AT THE TIME OF THE INSPECTION
- LOCATION(S) OF DISCHARGES OF SEDIMENT OR OTHER POLLUTANTS FROM THE SITE
- LOCATION(S) OF BMPS THAT NEED TO BE MAINTAINED
- LOCATION(S) OF BMPS THAT FAILED TO OPERATE AS DESIGNED OR PROVED INADEQUATE FOR A PARTICULAR LOCATION
- LOCATION(S) WHERE ADDITIONAL BMPS ARE NEEDED THAT DID NOT EXIST AT THE TIME OF INSPECTION
- CORRECTIVE ACTION REQUIRED INCLUDING ANY CHANGES TO THE SWP3 NECESSARY AND IMPLEMENTATION DATES

I. WHEN PRACTICES REQUIRE REPAIR OR MAINTENANCE
IF THE INSPECTION REVEALS THAT A CONTROL PRACTICE IS IN NEED OF REPAIR OR MAINTENANCE, WITH EXCEPTION OF A SEDIMENT SETTLING POND, IT MUST BE REPAIRED OR MAINTAINED WITHIN THREE DAYS OF INSPECTION. SEDIMENT SETTLING PONDS MUST BE REPAIRED OR MAINTAINED WITHIN 10 DAYS OF THE OF INSPECTION. SEDIMENT SETTLING PONDS MUST BE REPAIRED OR MAINTAINED WITHIN 10 DAYS OF THE INSPECTION.

II. WHEN PRACTICES FAIL TO PROVIDE THEIR INTENDED FUNCTION
IF THE INSPECTION REVEALS THAT A CONTROL PRACTICE FAILS TO PERFORM ITS INTENDED FUNCTION AND THAT ANOTHER, MORE APPROPRIATE CONTROL PRACTICE IS REQUIRED, THE SWP3, MUST BE AMENDED AND THE NEW CONTROL PRACTICE MUST BE INSTALLED WITHIN 10 DAYS OF INSPECTION.

III. WHEN PRACTICES DEPICTED ON THE SWP3 ARE NOT INSTALLED
IF THE INSPECTION REVEALS THAT A CONTROL PRACTICE HAS NOT BEEN IMPLEMENTED IN ACCORDANCE WITH THE SWP3. THE SWP3 MUST BE AMENDED AND THE NEW CONTROL PRACTICE MUST BE INSTALLED WITHIN 10 DAYS OF THE INSPECTION. IF THE INSPECTION REVEALS THAT THE PLANNED CONTROL PRACTICE IS NOT NEEDED, THE RECORD MUST CONTAIN A STATEMENT OF EXPLANATION AS TO WHY THE CONTROL PRACTICE IS NOT NEEDED.

INSPECTION REQUIREMENTS (AFTER CONSTRUCTION)
UPON COMPLETION, THE POST CONSTRUCTION STORM WATER MANAGEMENT CONTROLS SHALL BE INSPECTED AT LEAST ANNUALLY BY A QUALIFIED INSPECTOR. REFER TO THE COMMUNITY REQUIREMENTS AND/OR AN SIGNED AGREEMENT BETWEEN THE LAND OWNER AND THE COMMUNITY AS TO THE FREQUENCY OF INSPECTIONS AND MAINTENANCE REQUIREMENTS.

## ADDITIONAL CONSTRUCTION SITE POLLUTION CONTROLS

1. CONSTRUCTION PERSONNEL, INCLUDING SUBCONTRACTORS WHO MAY USE OR HANDLE HAZARDOUS OR TOXIC MATERIALS, SHALL BE MADE AWARE OF THE FOLLOWING GENERAL GUIDELINES REGARDING DISPOSAL AND HANDLING OF HAZARDOUS AND CONSTRUCTION WASTES:
- PREVENT SPILLS
- USE PRODUCTS UP
- FOLLOW LABEL DIRECTIONS FOR DISPOSAL
- REMOVE LIDS FROM EMPTY BOTTLESAND CANS WHEN DISPOSING IN TRASH
- RECYCLE WASTES WHENEVER POSSIBLE
- DON'T POUR INTO WATERWAYS, STORM DRAINS OR ONTO THE GROUND
- DON'T POUR DOWN THE SINK, FLOOR DRAIN OR SEPTIC TANKS
- DON'T BURY CHEMICALS OR CONTAINERS
- DON'T BURN CHEMICALS OR CONTAINERS
- DON'T MIX CHEMICALS TOGETHER

2. WASTE CONTAINERS SHALL BE PROVIDED FOR THE PROPER COLLECTION OF ALL WASTE MATERIAL INCLUDING CONSTRUCTION DEBRIS, TRASH, PETROLEUM PRODUCTS AND ANY HAZARDOUS MATERIALS USED ON-SITE. CONTAINERS SHALL BE COVERED AND NOT LEAKING. ALL WASTE MATERIAL SHALL BE DISPOSED OF AT FACILITIES APPROVED FOR THAT MATERIAL SHALL BE DISPOSED OF AT FACILITIES APPROVED FOR THAT MATERIAL. CONSTRUCTION DEMOLITION AND DEBRIS (CD&D) WASTE MUST BE DISPOSED OF AT AN OHIO EPA APPROVED CD&D LANDFILL.

3. NO CONSTRUCTION RELATED WASTED MATERIALS ARE TO BE BURIED ON-SITE. BY EXCEPTION, CLEAN FILL (BRICK, HARDENED CONCRETE, SOIL) MAY BE UTILIZED IN A WAY WHICH DOES NOT ENCROACH UPON NATURAL WETLANDS, STREAMS OR FLOODPLAINS OR RESULT IN THE CONTAMINATION OF WATERS OF THE STATE.

4. HANDLING CONSTRUCTION CHEMICALS. MIXING, PUMPING, TRANSFERRING OR OTHER HANDLING OF CONSTRUCTION CHEMICALS SUCH AS FERTILIZER, LIME, ASPHALT, CONCRETE DRYING COMPOUNDS, AND ALL OTHER POTENTIALLY HAZARDOUS MATERIALS SHALL BE PERFORMED IN AN AREA AWAY FROM ANY WATERCOURSE, DITCH OR STORM DRAIN.

5. EQUIPMENT FUELING AND MAINTENANCE, OIL CHANGING, ETC., SHALL BE PERFORMED AWAY FROM WATERCOURSES, DITCHES OR STORM DRAINS, IN AN AREA DESIGNATED FOR THAT PURPOSE. THE DESIGNATED AREA SHALL BE EQUIPPED FOR RECYCLING OIL AND CATCHING SPILLS. SECONDARY CONTAINMENT SHALL BE PROVIDED FOR ALL FUEL OIL STORAGE TANKS. THESE AREAS MUST BE INSPECTED EVERY SEVEN DAYS AND WITHIN 24 HRS. OF A0.5 INCH OR GREATER RAIN EVENT TO ENSURE THERE ARE NO EXPOSED MATERIALS WHICH WOULD CONTAMINATE STORM WATER. SITE OPERATORS MUST BE AWARE THAT SPILL PREVENTION CONTROL AND COUNTERMEASURES (SPCC) REQUIREMENTS MAY APPLY. AN SPCC PLAN IS REQUIRED FOR SITES WITH ONE SINGLE ABOVE GROUND TANK OF 660 GALLONS OR MORE, ACCUMULATIVE ABOVE GROUND STORAGE OF 1330 GALLONS OR MORE, OR 42,000 GALLONS OF UNDERGROUND STORAGE. CONTAMINATED SOILS MUST BE DISPOSED OF IN ACCORDANCE WITH ITEM 8.

6. CONCRETE WASH WATER SHALL NOT BE ALLOWED TO FLOW TO STREAMS, DITCHES, STORM DRAINS, OR ANY OTHER WATER CONVEYANCE. A SUMP OR PIT WITH NO POTENTIAL FOR DISCHARGE SHALL BE CONSTRUCTED IF NEEDED TO CONTAIN CONCRETE WASH WATER. FIELD TILE OR OTHER SUBSURFACE DRAINAGE STRUCTURES WITHIN 10 FT. OF THE SUMP SHALL BE CUT AND PLUGGED. FOR SMALL PROJECTS, TRUCK CHUTES MAY BE RINSED AWAY FROM ANY WATER CONVEYANCES.

7. SPILLS ON PAVEMENT SHALL BE ABSORBED WITH SAWDUST OR KITTY LITTER AND DISPOSED OF WITH THE TRASH AT A LICENSED SANITARY LANDFILL. HAZARDOUS OR INDUSTRIAL WASTES SUCH AS SOLVENTS, GASOLINE, OIL-BASED PAINTS, AND CEMENT CURING COMPOUNDS REQUIRE SPECIAL HANDLING. SPILLS SHALL BE REPORTED TO OHIO EPA (1-800-282-9378). SPILLS OF 25 GALLONS OR MORE OF PETROLEUM PRODUCTS SHALL BE REPORTED TO OHIO EPA, THE LOCAL FIRE DEPARTMENT, AND THE LOCAL EMERGENCY PLANNING COMMITTEE WITHIN 30 MIN. OF THE DISCOVERY OF THE RELEASE. ALL SPILLS WHICH CONTACT WATERS OF THE STATE MUST BE REPORTED TO OHIO EPA.

8. CONTAMINATED SOILS. IF SUBSTANCES SUCH AS OIL, DIESEL FUEL, HYDRAULIC FLUID, ANTIFREEZE, ETC. ARE SPILLED, LEAKED, OR RELEASED ONTO THE SOIL, THE SOIL SHOULD BE DUG UP AND SIPOSED OF AT LICENSED SANITARY LANDFILL OR OTHER APPROVED PETROLEUM CONTAMINATED SOIL REMEDIATION FACILITY. (NOT A CONSTRUCTION/DEMOLITION DEBRIS LANDFILL). NOTE THAT STORM WATER RUN OFF ASSOCIATED WITH CONTAMINATED SOILS ARE NOT TO BE AUTHORIZED UNDER OHIO EPA'S GENERAL STORM WATER PERMIT ASSOCIATED WITH CONSTRUCTION ACTIVITIES.

9. OPEN BURNING. NO MATERIALS CONTAINING RUBBER, GREASE, ASPHALT, OR PETROLEUM PRODUCTS, SUCH AS TIRES, AUTOPARTS, PLASTICS OR PLASTIC COATED WIRE MAY BE BURNED (OAC 3745-19). OPEN BURNING IS NOT ALLOWED IN RESTRICTED AREAS, WHICH ARE DEFINED AS: 1) WITHIN CORPORATION LIMITS; 2) WITHIN 1,000 FEET OUTSIDE A MUNICIPAL CORPORATION HAVING A POPULATION OF 1,000 TO 10,000 AND 3) A ONE MILE ZONE OUTSIDE OF A CORPORATION OF 10,000 OR MORE. OUTSIDE OF RESTRICTED AREAS, NO OPEN BURNING IS ALLOWED WITHIN 1,000 FEET OF AN INHABITED BUILDING ON ANOTHER PROPERTY. OPEN BURNING IS PERMISSIBLE IN A RESTRICTED AREA FOR: HEATING TAR, WELDING, SMUDGE POTS AND SIMILAR OCCUPATIONAL NEEDS, AND HEATING FOR WARMTH OR OUTDOOR BARBEQUES. OUTSIDE OF RESTRICTED AREAS, OPEN BURNING IS PERMISSIBLE FOR LANDSCAPE OR LAND-CLEARING WASTES (PLANT MATERIAL, WITH PRIOR WRITTEN PERMISSION FROM OHIO EPA), AND AGRICULTURAL WASTES, EXCLUDING BUILDINGS.

10. DUST CONTROL OR DUST SUPPRESSANTS SHALL BE USED TO PREVENT NUISANCE CONDITIONS, IN ACCORDANCE WITH THE MANUFACTURER'S SPECIFICATIONS AND IN A MANNER, WHICH PREVENT A DISCHARGE TO WATERS OF THE STATE. SUFFICIENT DISTANCE MUST BE PROVIDED BETWEEN APPLICATIONS AND NEARBY BRIDGES, CATCH BASINS, AND OTHER WATERWAYS. APPLICATION (EXCLUDING WATER) MAY NOT OCCUR WHEN RAIN IS IMMINENT AS NOTED IN THE SHORT TERM FORECAST. USED OIL MAY NOT BE APPLIED FOR DUST CONTROL.

11. OTHER AIR PERMITTING REQUIREMENTS: CERTAIN ACTIVITIES ASSOCIATED WITH CONSTRUCTION WILL REQUIRE AIR PERMITS INCLUDING BUT NOT LIMITED TO: MOBILE CONCRETE BATCH PLANTS, MOBILE ASPHALT PLANTS, CONCRETE CRUSHERS, LARGE GENERATORS, ETC. THESE ACTIVITIES WILL REQUIRE SPECIFIC OHIO EPA AIR PERMITS FOR INSTALLATION AND OPERATION. OPERATORS MUST SEEK AUTHORIZATION FROM THE CORRESPONDING DISTRICT OF OHIO EPA. FOR DEMOLITION OF ALL COMMERCIAL SITES, A NOTIFICATION FOR RESTORATION AND DEMOLITION MUST BE SUBMITTED TO OHIO EPA TO DETERMINE IF ASBESTOS CORRECTIVE ACTIONS ARE REQUIRED.

12. PROCESS WASTE WATER/LEACHATE MANAGEMENT. OHIO EPA'S CONSTRUCTION GENERAL PERMIT ONLY ALLOWS THE DISCHARGE OF STORM WATER AND DOES NOT INCLUDE OTHER WASTE STREAMS/DISCHARGES SUCH AS VEHICLE AND/OR EQUIPMENT WASHING, ON-SITE SEPTIC LEACHATE, CONCRETE WASH OUTS, WHICH ARE CONSIDERED PROCESS WASTEWATERS. ALL PROCESS WASTEWATERS MUST BE COLLECTED AND PROPERLY DISPOSED AT AN APPROVED DISPOSAL FACILITY. IN THE EVENT, LEACHATE OR SEPTAGE IS DISCHARGED IT MUST BE ISOLATED FOR COLLECTION AND PROPER DISPOSAL AND CORRECTIVE ACTIONS TAKEN TO ELIMINATE THE SOURCE OF WASTE WATER.

13. A PERMIT TO INSTALL (PTI) IS REQUIRED PRIOR TO THE CONSTRUCTION OF ALL CENTRALIZED SANITARY SYSTEMS, INCLUDING SEWER EXTENSIONS, AND SEWERAGE SYSTEMS (EXCEPT THOSE SERVING ONE, TWO, AND THREE FAMILY DWELLINGS) AND POTABLE WATER LINES. PLANS MUST BE SUBMITTED AND APPROVED BY OHIO EPA. ISSUANCE OF AN OHIO EPA CONSTRUCTION GENERAL STORM WATER PERMIT DOES NOT AUTHORIZE THE INSTALLATION OF ANY SEWERAGE SYSTEM WHERE OHIO EPA HAS NOT APPROVED A PTI.

## SOIL STABILIZATION CONTROLS

CLEARING & GRUBBING
LIMITS OF CLEARING AND GRADING SHALL BE CLEARLY MARKED ON THE SITE WITH SIGNAGE, FLAGGING AND/OR CONSTRUCTION FENCING.

THE CONTRACTOR SHALL LIMIT THE SURFACE AREA OF ERODABLE EARTH MATERIAL EXPOSED BY EXCAVATION, BORROW, AND FILL OPERATIONS AND PROVIDE IMMEDIATE PERMANENT OR TEMPORARY CONTROL MEASURES TO PREVENT CONTAMINATION OF ADJACENT STREAMS OR OTHER WATER COURSES, LAKES, PONDS, WETLANDS OR OTHER AREAS OF WATER IMPOUNDMENT.

CONSTRUCTION ENTRANCE
A STONED CONSTRUCTION ENTRANCE SHALL BE INSTALLED FOR ALL INGRESS & EGRESS TO THE SITE. THE MINIMUM DIMENSIONS OF THE DRIVE SHALL BE 20 FT. WIDE AND 50 FT. LONG. THE STONE SHALL BE 12 INCHES DEEP WITH AN UNDERLAIN GEOTEXTILE FABRIC. THE DRIVE SHALL BE INSTALLED PRIOR TO ANY CLEARING AND GRUBBING. SEDIMENTS SHALL BE REMOVED FROM ROADWAYS DAILY.

STABILIZATION
PERMANENT AND TEMPORARY STABILIZATION ARE DEFINED IN PART VII OF THE OEPA AUTHORIZATION FOR STORM WATER DISCHARGES ASSOCIATED WITH CONSTRUCTION ACTIVITY UNDER THE NATIONAL POLLUTANT DISCHARGE ELIMINATION SYSTEM OHIO EPA PERMIT NO. OH000006 EFFECTIVE DATE 4/23/23 - EXPIRATION DATE 4/22/28 DISTURBED AREAS MUST BE STABILIZED AS SPECIFIED IN THE FOLLOWING TABLES BELOW:

TEMPORARY SEEDING
SEEDING AREAS SHALL BE INSPECTED AND WHERE THE SEED HAS NOT PRODUCED 80% COVER SHALL BE RESEEDED AS NECESSARY BY THE CONTRACTOR. AREAS SHALL BE STABILIZED WITH MULCH WHEN CONDITIONS PROHIBIT SEEDING.

STRAW MULCHING SHALL BE APPLIED AT A RATE 2-3 STANDARD 45 LB. BALES PER 1000 SQ.FT. OF DISTURBED AREA OR 2 TONS PER ACRE. ALL HYDROSEEDING MUST BE STRAW MULCHED ACCORDING TO THE ABOVE SPECIFICATIONS UNLESS IT IS WATERED WEEKLY.

ALL DETENTION PONDS, RETENTION PONDS, WATER QUALITY STRUCTURES, SEDIMENT PONDS, SEDIMENT TRAPS, EARTHEN DIVERSIONS OR EMBANKMENTS SHALL BE SEEDED AND MULCHED WITHIN 7 DAYS OF COMPLETED CONSTRUCTION.

TEMPORARY STABILIZATION

| AREA REQUIRING TEMPORARY STABILIZATION | TIME FRAME TO APPLY EROSION CONTROL |
|---|---|
| ANY DISTURBED AREAS WITHIN 50 FT. OF A STREAM AND NOT AT FINAL GRADE | WITHIN TWO DAYS OF THE MOST RECENT DISTURBANCE IF THE AREA WILL REMAIN IDLE FOR MORE THAN 14 DAYS |
| FOR ALL CONSTRUCTION ACTIVITIES, ANY DISTURBED AREAS THAT WILL BE DORMANT FOR MORE THAN 14 DAYS BUT LESS THAN ONE YEAR, AND NOT WITHIN 50 FT. OF STREAM | WITHIN SEVEN DAYS OF THE MOST RECENT DISTURBANCE WITHIN THE AREA FOR RESIDENTIAL SUBDIVISONS, DISTURBED AREAS MUST BE STABILIZED AT LEAST SEVEN DAYS PRIOR TO TRANSFER OF PERMIT COVERAGE FOR THE INDIVIDUAL LOT(S) |
| DISTURBED AREAS THAT WILL BE IDLE OVER WINTER | PRIOR TO ONSET OF WINTER WEATHER (NOV.1) STRAW MULCH 2 TO 3 BALES PER 1000 SQ.FT. AND OR 2 TONS PER ACRE. |

## TEMPORARY RUN-OFF CONTROLS

DIVERSION SWALES
STORMWATER DIVERSION PRACTICES SHALL BE USED TO KEEP RUNOFF AWAY FROM DISTURBED AREAS AND STEEP SLOPES WHERE PRACTICAL. DIVERSIONS SHOULD BE USED IN LOCATIONS WHERE THE DRAINAGE AREA EXCEEDS THE CAPACITY OF THE SILT FENCE. IN SUCH CASES, THE RUNOFF SHOULD BE DIVERTED INTO A SEDIMENT BASIN OR SEDIMENT TRAP. DIVERSION SWALES, DIKES OR BERMS, MAY RECEIVE FROM AREAS UP TO 10 ACRES.

TEMPORARY SEEDING SPECIFICATIONS

| SEEDING DATES | SPECIES | LB. / 1000SQFT | PER ACRE |
|---|---|---|---|
| MARCH 1 TO AUGUST 15 | OATS<br>TALL FESCUE<br>ANNUAL RYEGRASS<br><br>PERENNIAL RYEGRASS<br>TALL FESCUE<br>ANNUAL RYEGRASS | 3<br>1<br>1<br><br>1<br>1<br>1 | 4 BUSHEL<br>40 LB.<br>40 LB.<br><br>40 LB.<br>40 LB.<br>40 LB. |
| AUGUST 16 TO NOVEMBER 1 | RYE<br>TALL FESCUE<br>ANNUAL RYEGRASS<br><br>WHEAT<br>TALL FESCUE<br>ANNUAL RYEGRASS<br><br>PERENNIAL RYEGRASS<br>TALL FESCUE<br>ANNUAL RYEGRASS | 1<br>1<br>1<br><br>1<br>1<br>1<br><br>1<br>1<br>1 | 2 BUSHEL<br>40 LB.<br>40 LB.<br><br>40 LB.<br>40 LB.<br>40 LB.<br><br>40 LB.<br>40 LB.<br>40 LB. |
| NOVEMBER 1 TO SPRING SEEDING USE MULCH ONLY, SODDING PRACTICES OR DORMANT SEEDING.<br>NOTE: OTHER APPROVED SEED SPECIES MAY BE SUBSTITUTED. | | | |

PERMANENT STABILIZATION

| AREA REQUIRING PERMANENT STABILIZATION | TIME FRAME TO APPLY EROSION CONTROL |
|---|---|
| ANY AREA THAT WILL LIE DORMANT FOR ONE YEAR OR MORE | WITHIN SEVEN DAYS OF THE MOST RECENT DISTURBANCE |
| ANY AREA WITHIN 50 FT. OF A STREAM AND AT FINAL GRADE | WITHIN TWO DAYS OF REACHING FINAL GRADE |
| ANY OTHER AREAS AT FINAL GRADE | WITHIN SEVEN DAYS OF REACHING FINAL GRADE WITHIN THAT AREA |

PERMANENT SEEDING SPECIFICATIONS

| Seed Mix | lb./ac. | lb. / 1000sqft | Notes: |
|---|---|---|---|
| General Use | | | |
| Creeping Red Fescue<br>Domestic Ryegrass<br>Kentucky Bluegrass | 20-40<br>10-20<br>10-20 | 1/2-1<br>1/4-1/2<br>1/4-1/2 | |
| Tall Fescue | 40 | 1 | |
| Dwarf Fescue | 40 | 1 | |
| Steep Banks or Cut Slopes | | | |
| Tall Fescue | 40 | 1 | |
| Crown Vetch | 10 | 1/4 | Do not seed later than August. |
| Tall Fescue | 20 | 1/2 | |
| Flat Pea | 20 | 1/2 | Do not seed later than August. |
| Tall Fescue | 20 | 1/2 | |
| Road Ditches and Swales | | | |
| Tall Fescue | 40 | 1 | |
| Dwarf Fescue | 90 | 2 1/4 | |
| Kentucky Bluegrass | 5 | | |
| Lawns | | | |
| Kentucky Bluegrass<br>Perennial Ryegrass | 60<br>60 | 1 1/2<br>1 1/2 | |
| Kentucky Bluegrass<br>Creeping Red Fescue | 60<br>60 | 1 1/2<br>1 1/2 | For Shaded areas. |
| Note: other approved seed species may be substituted. | | | |

PERMANENT STABILIZATION OF CONVEYANCE CHANNELS
OPERATORS SHALL UNDERTAKE SPECIAL MEASURES TO STABILIZE CHANNELS AND OUTFALLS AND PREVENT EROSIVE FLOWS. MEASURES MAY INCLUDE SEEDING, DORMANT SEEDING (AS DEFINED IN THE LATEST EDITION OF ODNR RAINWATER AND LAND DEVELOPMENT MANUAL). MULCHING, EROSION CONTROL MATTING, SODDING, RIPRAP NATURAL CHANNEL DESIGN WITH BIO ENGINEERING TECHNIQUES OR ROCK CHECK DAMS.

## TEMPORARY SEDIMENT CONTROLS

SILT FENCE
SHEET FLOW RUNOFF FROM DENUDED AREAS SHALL BE INTERCEPTED BY SILT FENCE OR DIVERSIONS TO PROTECT ADJACENT PROPERTIES AND WATER RESOURCES FROM SEDIMENT TRANSPORTED VIA SHEET FLOW. WHERE INTENDED TO PROVIDE SEDIMENT CONTROL, SILT FENCES SHALL BE PLACED ON A LEVEL CONTOUR. THE EPA PERMIT NO. OHC000006 DOES NOT PRECLUDE THE USE OF OTHER SEDIMENT BARRIERS DESIGNED TO CONTROL SHEET FLOW RUNOFF. SILT FENCE IS NOT PERMITTED TO BE USED FOR CONTROLLING CONCENTRATED SURFACEWATER FLOW (ONLY SHEET FLOW).

THE SIZE OF THE DRAINAGE AREA THAT CAN BE TREATED BY SILT FENCE VARIES WITH TOPOGRAPHY. THE FOLLOWING TABLE IS TO BE USED TO DETERMINE THE MAXIMUM UPSTREAM DISTANCE THAT IS ALLOWABLE TO BE TREATED BY THE SILT FENCE IN ORDER TO FUNCTION PROPERLY:

| SLOPE | | SLOPE LENGTH (FT) |
|---|---|---|
| 0-2% | FLATTER THAN 50:1 | 250 |
| 2-10% | 50:1-10:1 | 125 |
| 10%-20% | 10:1-5:1 | 100 |
| 20%-33% | 5:1-3:1 | 75 |
| 33%-50% | 3:1-2:1 | 50 |
| >50% | >2:1 | 25 |

INLET PROTECTION
OTHER EROSION AND SEDIMENT CONTROL PRACTICES SHALL MINIMIZE SEDIMENT LADEN WATER ENTERING ACTIVE STORM DRAIN SYSTEMS, UNLESS THE STORM DRAIN SYSTEM DRAINS TO A SEDIMENT POND. INLET PROTECTION IS MANDATORY WHERE SEDIMENT SETTLING PONDS WILL NOT BE IMPLEMENTED.

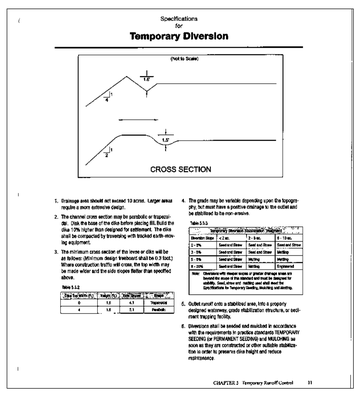


## CONSTRUCTION SEQUENCE NARRATIVE

1. PROVIDE SAFE AND SECURE PEDESTRIAN AND VEHICULAR TRAFFIC CIRCULATION THROUGHOUT THE ENTIRETY OF THE CONSTRUCTION SEQUENCE WITH WELL DEFINED CONSTRUCTION BOUNDARIES TO BE ACCESSED BY CONSTRUCTION PERSONNEL ONLY. ALL EROSION CONTROLS ARE TO BE THOROUGHLY INSPECTED BY THE CONTRACTOR UPON THE COMPLETION OF EACH WORK DAY AND MAINTAINED THROUGHOUT THE REQUIRED LIFE OF THE CONTROL AS SPECIFIED BY THE APPROVED SWP3 PLANS AND NARRATIVE. CONTRACTOR MUST REVIEW THE SWP3 AND NARRATIVE.
2. CONTRACTOR SHALL COMPLETE AND SUBMIT THE OEPA CO-PERMITEE NOTICE OF INTENT (N.O.I.) APPLICATION. ALL OPERATORS AT THE CONSTRUCTION SITE ARE REQUIRED TO BECOME CO-PERMITTEES. VISIT THE OHIO EPA eBUSINESS CETNER FOR MORE INFORMAITON.
3. INSTALL STONE CONSTRUCTION ENTRANCE FOR ACCESS TO CONSTRUCTION AREAS OF SITE.
4. AS NECESSARY, DELIVER CONSTRUCTION TRAILER TO SITE AND ESTABLISH TEMPORARY POWER & UTILITIES.
5. STAKEOUT LIMITS OF DISTURBANCE AND INSTALL ORANGE CONSTRUCTION FENCE TO CLEARLY DEMONSTRATE THE BOUNDARY OF PRESERVED WETLANDS AND RIPARIAN SETBACKS AS REQUIRED.
6. INSTALL TEMPORARY INLET PROTECTION ON ALL EXISTING CATCH BASINS. INLET PROTECTION SHALL BE INSTALLED AS PER PLAN DESIGNATION.
7. IF POSSIBLE PRIOR TO CLEARING, INSTALL FILTER FABRIC FENCE OR 12" FILTER SOCK WHERE SHOWN ON PLANS. FILTER FABRIC FENCE SHALL BE INSTALLED AS PER PLAN DESIGNATION. IF SILT FENCE/FILTER SOCK CANNOT BE INSALLED PRIOR TO CLEARING (DUE TO ACCESSIBILITY CONSTRAINTS) IT SHOULD BE INSTALLED WITHIN 7 DAYS OF CLEARING AND PRIOR TO GRUBBING.
8. BEGIN CLEARING AND GRUBBING OF THE SITE.
9. WITHIN 7 DAYS OF THE START OF CLEARING & GRUBBING, THE TEMPORARY SEDIMENT BASIN SHALL EXCAVATED/CONSTRUCTED. THE TEMPORARY SEDIMENT BASIN OUTLET STRUCTURE AND RELATING OUTLET PIPE AND EMERGENCY OVERFLOW SPILLWAY INCLUDING ALL OUTLET PROTECTION SHALL BE INSTALLED ONCE GRADES ARE ESTABLISHED. TEMPORARY BASIN SHALL BE INSTALLED WITHIN SEVEN DAYS FROM THE START OF GRUBBING AND SITE GRADING.
10. REMOVE TOPSOIL FROM AREAS AS NECESSARY. REMOVE FROM SITE PER OHIO ENVIRONMENTAL PROTECTION AGENCY (OHIO EPA) STANDARDS OR TEMPORARILY STOCKPILE MATERIAL IN DESIGNATED AREAS.
11. INSTALL TEMPORARY DIVERSION SWALES, DIRECTING RUN-OFF TO THE SEDIMENT BASIN. THE BASIN AREA AND TEMPORARY SWALE SHALL BE SEEDED AND MULCHED UPON COMPLETION AS PER THE TEMPORARY SEEDING SPECIFATIONS.
12. AT A MINIMUM ALL CONTROLS ARE INSPECTED AT LEAST ONCE EVERY 7 DAYS AND WITHIN 24 HOURS AFTER ANY STORM EVENT GREATER THAN 0.5 INCH PER 24 HOUR PERIOD. IF THE INSPECTION REVEALS THAT A CONTROL PRACTICE IS IN NEED OF REPAIR OR MAINTENANCE, WITH THE EXCEPTION OF A SEDIMENT SETTLING POND, IT MUST BE REPAIRED OR MAINTAINED WITHIN 3 DAYS OF THE INSPECTION. SEDIMENT SETTLING PONDS MUST BE REPAIRED WITHIN 10 DAYS OF THE INSPECTION.
13. TEMPORARILY STORE MATERIAL EXCAVATED FOR CONSTRUCTION AT DESIGNATED AREAS. MATERIAL TO BE MAINTAINED FOR DUST CONTROL BY USE OF A COVER OR OTHER METHODS APPROVED BY OHIO EPA.
14. IN THE EVENT OF RAIN, ALLOW STANDING WATER TO SETTLE PRIOR TO PUMPING. UTILIZE THE PUMPING SYSTEMS TO PUMP POLLUTED WATER PER REQUIREMENTS. ALLOW ONLY CLEAN WATER TO BE DISCHARGED TO THE EXISTING DRAINAGE SWALE. REMOVE SILT FROM BASIN AS NECESSARY PRIOR TO CONTINUING EARTHWORK. MATERIAL SHOULD BE MECHANICALLY SPREAD AND DRIED PRIOR TO INCORPORATION INTO THE EARTHWORK PROCEDURES. ADEQUACY OF THE DRIED MATERIAL IS TO BE DETERMINED BY THE ONSITE GEOTECHNICAL ENGINEER. THE CONTRACTOR SHALL BE RESPONSIBLE AND ENSURE THAT PROPER MECHANISMS ARE IN PLACE TO CONTROL WASTE MATERIALS. CONSTRUCTION WASTES INCLUDE BUT ARE NOT LIMITED TO, EXCESS SOIL MATERIALS, BUILDING MATERIALS, CONCRETE WASH WATER, SANITARY WASTES, ETC. THAT COULD ADVERSELY IMPACT WATER QUALITY. MEASURES SHALL BE PLANNED AND IMPLEMENTED FOR HOUSEKEEPING, MATERIALS MANAGEMENT, AND LITTER CONTROL WHEREVER POSSIBLE, RECYCLING OF EXCESS MATERIALS IS PREFERRED, RATHER THAN DISPOSAL. IF WASTE MATERIAL IS REMOVED FROM THE PROJECT SITE, THE CONTRACTOR MUST PROVIDE AN EROSION AND SEDIMENTATION CONTROL PLAN TO THE REGULATORY COUNTY CONSERVATION DISTRICT MAINTAINING JURISDICTION OF THE PROJECT SITE AS WELL AS THE COUNTY CONSERVATION DISTRICT MAINTAINING JURISDICTION OF THE DISPOSAL AREA.
15. BEGIN

## SWP3 Inspection Report Log

Project Name: Fairway Pines Subdivision Phase 2

| Inspection # | Name of Inspector | Date of Inspection | Rain Event | Type of Corrective Action Required |
|---|---|---|---|---|
| 1 | | | | |
| 2 | | | | |
| 3 | | | | |
| 4 | | | | |
| 5 | | | | |
| 6 | | | | |
| 7 | | | | |
| 8 | | | | |
| 9 | | | | |
| 10 | | | | |
| 11 | | | | |
| 12 | | | | |
| 13 | | | | |
| 14 | | | | |
| 15 | | | | |

## SWP3 Amendment Log

Project Name: Fairway Pines Subdivision Ph.2

| Amendment No. | Description of the Amendment | Date of Amendment | Amendment Prepared By |
|---|---|---|---|
| | | | |
| | | | |
| | | | |
| | | | |
| | | | |
| | | | |
| | | | |
| | | | |
| | | | |
| | | | |
| | | | |
| | | | |
| | | | |
| | | | |
| | | | |
| | | | |
| | | | |
| | | | |
| | | | |
| | | | |

## SWP3 Grading and Stabilization Activities Log

Project Name: Fairway Pines Subdivision Phase 2

| Date Grading Activity Initiated | Description of Grading Activity | Date Grading Activity Ceased (Indicate temporary or permanent | Date When Stabilization Measures are Initiated | Description of Stabilization Measure and Location |
|---|---|---|---|---|
| | | | | |
| | | | | |
| | | | | |

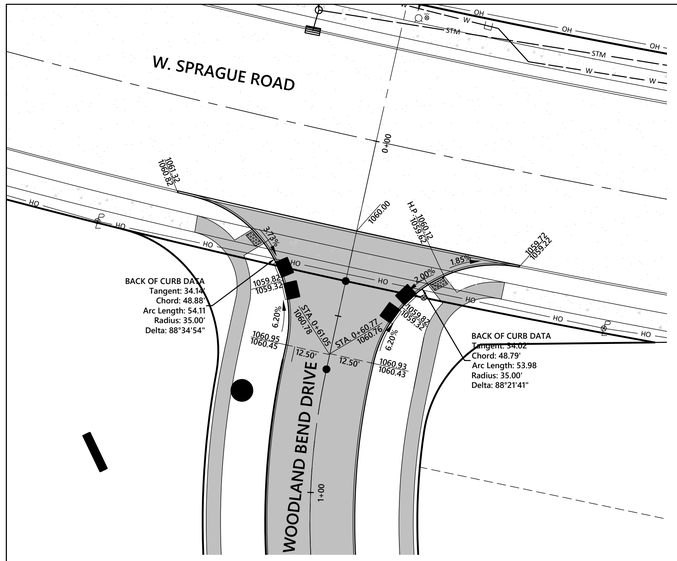


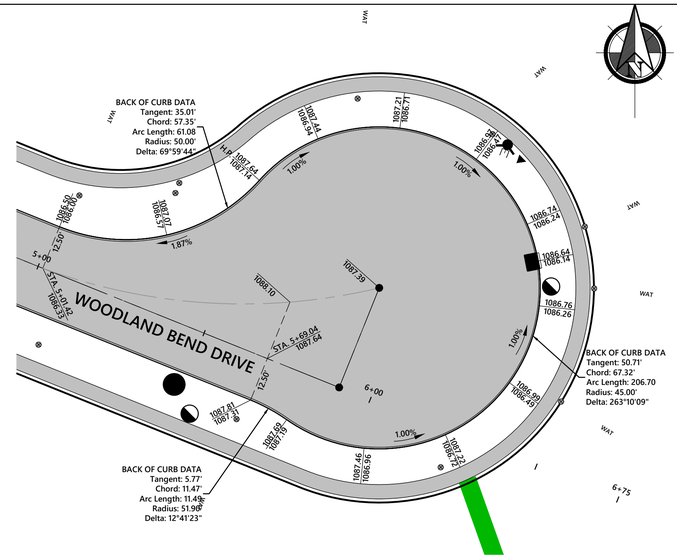


GRAPHIC SCALE

20 0 10 20

(IN FEET)
1 INCH = 20 FEET

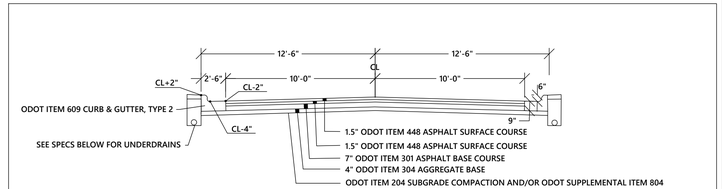


ALTERNATE ASPHALT PAVEMENT SECTION
NOT TO SCALE

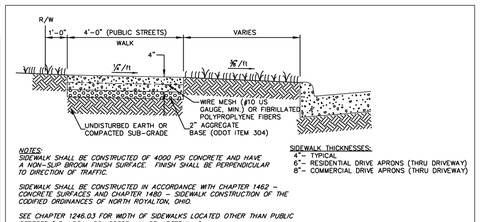


NOTES:
SIDEWALK SHALL BE CONSTRUCTED OF 4000 PSI CONCRETE AND HAVE A NON-SLIP BROOM FINISH SURFACE. FINISH SHALL BE PERPENDICULAR TO DIRECTION OF TRAFFIC.

SIDEWALK SHALL BE CONSTRUCTED IN ACCORDANCE WITH CHAPTER 1462 – CONCRETE SURFACES AND CHAPTER 1480 – SIDEWALK CONSTRUCTION OF THE CODIFIED ORDINANCES OF NORTH ROYALTON, OHIO.

SEE CHAPTER 1246.03 FOR WIDTH OF SIDEWALKS LOCATED OTHER THAN PUBLIC STREETS (I.E. LOCAL COLLECTOR, MAJOR ARTERIAL...)

SIDEWALK THICKNESSES:
4"– TYPICAL
6"– RESIDENTIAL DRIVE APRONS (THRU DRIVEWAY)
8"– COMMERCIAL DRIVE APRONS (THRU DRIVEWAY)

CONCRETE SIDEWALK DETAIL – CITY OF NORTH ROYALTON
NOT TO SCALE

## CITY OF NORTH ROYALTON – STANDARD CONCRETE NOTES

All materials and workmanship shall conform to the latest State of Ohio Department of Transportation (ODOT) Construction and Materials Specifications as well as the Codified Ordinances of North Royalton, Ohio. If there is a discrepancy between the two, the City Engineer of North Royalton shall make a final ruling.

A copy of concrete mix designs must be submitted for approval to the City Engineer forty-eight (48) hours prior to commencement of ANY concrete installation. The concrete mix designs submitted for approval must include, but are not limited to the following: sleeper slab concrete, slip form paver concrete, and any handwork concrete.

1. All work to be performed under FULL TIME inspection by the City of North Royalton or its designated representative.
2. Opening of pavement to traffic to be determined by 600 P.S.I. beam test (for early opening due to additional construction traffic) and 4,000 P.S.I. cylinder test (7 days and 28 days breaks) for all other traffic.
3. All concrete delivery tickets must identify the batch weights and contents and must conform to the specifications as outlined in ODOT 499.08, EXCEPT; the City of North Royalton will only accept concrete delivery batch tickets which have been generated from an automated and computerized concrete batching system. Hand written, computer typed or computer printed delivery tickets will not be accepted.
4. Air entrainment shall be 5.5% to 8% (Increased from the ODOT 6% +/- 2%).
5. The testing of concrete slump, air entrainment and temperature is to be executed on three of the first six trucks to establish that the concrete is within the required specifications. Thereafter, in addition to the required testing increments, random slump, entrained air content and temperature testing will be executed to confirm continual compliance of the specifications.
6. Four (4) sample cylinders are to be cast for each twenty-five cubic yards (25 CY) of concrete installed, (two-7 day breaks and two-28 day breaks).
7. At all intersections and apron areas, a beam will be cast in addition to the cylinders every twenty-five cubic yards (25 CY) installed in addition to any beams that plan to be cast by the contractor.
8. There is to be NO WATER ADDED ON-SITE to the concrete. One person, the Paving Company's authority on site, in the presence of the City's observer may direct water to be added and mixed, if determined necessary (not to exceed maximum water-cement ratio, air entrainment and slump). This will be noted in the inspection report and additional testing may be performed on the water added truck.
9. If a concrete truck arrives or becomes "out-of-spec", (for whatever reason), and would require rejection, the City of North Royalton Engineer will direct. If the City Engineering Office is closed or in unavailable, it will be the inspection representative's decision to reject, after all efforts have been attempted to bring the concrete within specifications.
10. All concrete trucks are required to "wash-out" in the approved concrete wash-out pit or suitable self-contained container.
11. Sub grade to be compacted and tested to 98% to 100% of Dry Density Proctor. Moisture content to be optimum +/- 2.
12. When a joint fails within five (5) feet or, or contacts basins, manholes or other structures, shorten one or more slabs either side of opening to permit the joint to fall on round structures and at or between corners of rectangular structures, NOTE: All steels is epoxy coated.
13. All soft and yielding material and other portions of the subgrade which will not compact readily when rolled or tamped shall be removed as directed by the City Engineer and replaced with suitable material placed and compacted.
14. Sawed or hand formed joints to be sealed with ODOT Item 705.04, hot applied joint sealer.
15. If an existing underdrain (curb drain) is removed or disturbed, replacement shall conform to the following: 4" underdrain, solid wall PVC (perforated), ASTM F-758. Non-woven geotextile fabric wrap meeting the requirements of AASHTO M288, Table 1 (class 3) and Table 2. 8" aggregate washed.

| REV. No. | DATE | BY |
|---|---|---|
| | | |

STATE OF OHIO
KEVIN HOFFMAN
74831
REGISTERED
PROFESSIONAL ENGINEER

DATE: 2/5/24 DRAWN: NMO
SCALE: HOR. 1"=20' VERT. 1"=20'
FOLDER: DWG/Proj. Engineering
FILENAME: Utility, SWP3, & Grading
TAB: 15-Pvmt & Int Detail
BNDY. CHK: MPS
BASE. CHK: KTH

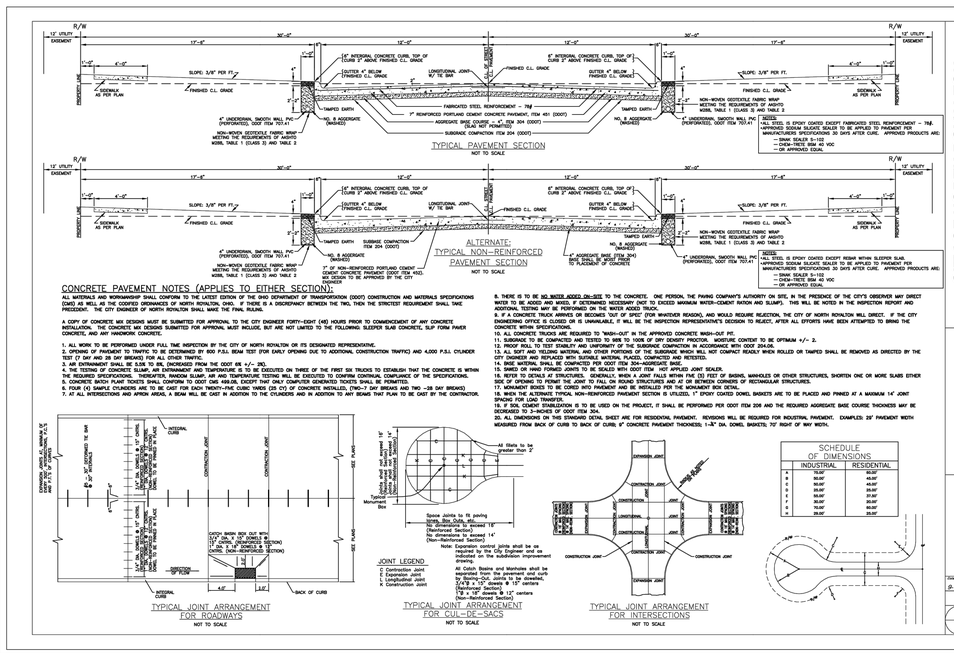


CONCRETE PAVEMENT NOTES (APPLIES TO EITHER SECTION):

ALL MATERIALS AND WORKMANSHIP SHALL CONFORM TO THE LATEST EDITION OF THE OHIO DEPARTMENT OF TRANSPORTATION (ODOT) CONSTRUCTION AND MATERIALS SPECIFICATIONS (CMS) AS WELL AS THE CODIFIED ORDINANCES OF NORTH ROYALTON, OHIO. IF THERE IS A DISCREPANCY BETWEEN THE TWO, THEN THE STRICTEST REQUIREMENT SHALL TAKE PRECEDENT. THE CITY ENGINEER OF NORTH ROYALTON SHALL MAKE THE FINAL RULING.

A COPY OF CONCRETE MIX DESIGNS MUST BE SUBMITTED FOR APPROVAL TO THE CITY ENGINEER FORTY-EIGHT (48) HOURS PRIOR TO COMMENCEMENT OF ANY CONCRETE INSTALLATION. THE CONCRETE MIX DESIGNS SUBMITTED FOR APPROVAL MUST INCLUDE, BUT ARE NOT LIMITED TO THE FOLLOWING: SLEEPER SLAB CONCRETE, SLIP FORM PAVER CONCRETE, AND ANY HANDWORK CONCRETE.

1. ALL WORK TO BE PERFORMED UNDER FULL TIME INSPECTION BY THE CITY OF NORTH ROYALTON OR ITS DESIGNATED REPRESENTATIVE.
2. OPENING OF PAVEMENT TO TRAFFIC TO BE DETERMINED BY 600 P.S.I. BEAM TEST (FOR EARLY OPENING DUE TO ADDITIONAL CONSTRUCTION TRAFFIC) AND 4,000 P.S.I. CYLINDER TEST (7 DAY AND 28 DAY BREAKS) FOR ALL OTHER TRAFFIC.
3. AIR ENTRAINMENT SHALL BE 5.5% TO 8%. (INCREASED FROM THE ODOT 6% +/– 2%).
4. THE TESTING OF CONCRETE SLUMP, AIR ENTRAINMENT AND TEMPERATURE IS TO BE EXECUTED ON THREE OF THE FIRST SIX TRUCKS TO ESTABLISH THAT THE CONCRETE IS WITHIN THE REQUIRED SPECIFICATIONS. THEREAFTER, RANDOM SLUMP, AIR AND TEMPERATURE TESTING WILL BE EXECUTED TO CONFIRM CONTINUAL COMPLIANCE OF THE SPECIFICATIONS.
5. ALL CONCRETE DELIVERY TICKETS MUST IDENTIFY THE BATCH WEIGHTS AND CONTENTS AND MUST CONFORM TO THE SPECIFICATIONS AS OUTLINED IN ODOT 499.08, EXCEPT; THE CITY OF NORTH ROYALTON WILL ONLY ACCEPT CONCRETE DELIVERY BATCH TICKETS WHICH HAVE BEEN GENERATED FROM AN AUTOMATED AND COMPUTERIZED CONCRETE BATCHING SYSTEM. HAND WRITTEN, COMPUTER TYPED OR COMPUTER PRINTED DELIVERY TICKETS WILL NOT BE ACCEPTED.
6. FOUR (4) SAMPLE CYLINDERS ARE TO BE CAST FOR EACH TWENTY-FIVE CUBIC YARDS OF CONCRETE INSTALLED, (TWO-7 DAY BREAKS AND TWO –28 DAY BREAKS).
7. AT ALL INTERSECTIONS AND APRON AREAS, A BEAM WILL BE CAST IN ADDITION TO THE CYLINDERS AND IN ADDITION TO ANY BEAMS THAT PLAN TO BE CAST BY THE CONTRACTOR.
8. THERE IS TO BE NO WATER ADDED ON-SITE TO THE CONCRETE. ONE PERSON, THE PAVING COMPANY'S AUTHORITY ON SITE, IN THE PRESENCE OF THE CITY'S OBSERVER MAY DIRECT WATER TO BE ADDED AND MIXED, IF DETERMINED NECESSARY (NOT TO EXCEED MAXIMUM WATER–CEMENT RATIOIN AND SLUMP). THIS WILL BE NOTED IN THE INSPECTION REPORT AND ADDITIONAL TESTING MAY BE PERFORMED ON THE WATER ADDED TRUCK.
9. IF A CONCRETE TRUCK ARRIVES OR BECOMES "OUT OF SPEC" (FOR WHATEVER REASON), AND WOULD REQUIRE REJECTION, THE CITY OF NORTH ROYALTON WILL DIRECT. IF THE CITY ENGINEERING OFFICE IS CLOSED OR IS UNAVAILABLE, IT WILL BE THE INSPECTION REPRESENTATIVE'S DECISION TO REJECT, AFTER ALL EFFORTS HAVE BEEN ATTEMPTED TO BRING THE CONCRETE WITHIN SPECIFICATIONS.
10. ALL CONCRETE TRUCKS ARE REQUIRED TO "WASH–OUT" IN THE APPROVED CONCRETE WASH–OUT PIT.
11. SUB GRADE TO BE COMPACTED AND TESTED TO 98% TO 100% OF DRY DENSITY PROCTOR. MOISTURE CONTENT TO BE OPTIMUM +/- 2.
12. PROOF ROLL TO TEST STABILITY AND UNIFORMITY OF THE SUBGRADE COMPACTION IN ACCORDANCE WITH ODOT 204.05.
13. ALL SOFT AND YIELDING MATERIAL AND OTHER PORTIONS OF THE SUBGRADE WHICH WILL NOT COMPACT READILY WHEN ROLLED OR TAMPED SHALL BE REMOVED AS DIRECTED BY THE CITY ENGINEER AND REPLACED WITH SUITABLE MATERIAL PLACED, COMPACTED AND RETESTED.
14. BASE MATERIAL SHALL BE COMPACTED PER ODOT ITEM 304–AGGREGATE BASE.
15. SHARP OR HAND FORMED JOINTS TO BE SEALED WITH ODOT ITEM –HOT APPLIED JOINT SEALER.
16. REFER TO DETAILS OF STRUCTURES. DOWELLING WHEN A JOINT FALLS WITHIN TWO FEET OF BARREL, MANHOLES OR OTHER STRUCTURES. SHORTEN ONE OR MORE SLABS EITHER SIDE OF OPENING TO PERMIT THE JOINT TO FALL ON ROUND STRUCTURES AND AT OR BETWEEN CORNERS OF RECTANGULAR STRUCTURES.
17. ALL DOWELED JOINTS TO BE COATED WITH PARAFFIN AND BE INSTALLED PER THE MONUMENT BOX DETAIL.
18. WHEN THE ALTERNATE TYPICAL NON–REINFORCED PAVEMENT SECTION IS UTILIZED, 1" EPOXY COATED DOWEL BASKETS ARE TO BE PLACED AND PINNED AT A MAXIMUM 14" JOINT SPACING FOR LOAD TRANSFER.
19. IF SOIL CONTENT STABILIZATION IS TO BE USED ON THE PROJECT, IT SHALL BE PERFORMED PER ODOT ITEM 206 AND THE REQUIRED AGGREGATE BASE COURSE THICKNESS MAY BE DECREASED TO 3–INCHES OF ODOT ITEM 304.
20. ALL DIMENSIONS ON THIS STANDARD DETAIL SHEET ARE FOR RESIDENTIAL PAVEMENT. REVISIONS WILL BE REQUIRED FOR INDUSTRIAL PAVEMENT. EXAMPLES: 20' PAVEMENT WIDTH MEASURED FROM BACK OF CURB TO BACK OF CURB, 8" CONCRETE PAVEMENT THICKNESS; 1–8" DIA. DOWEL BASKETS; 70' RADIUS OF MAY WIDTH.

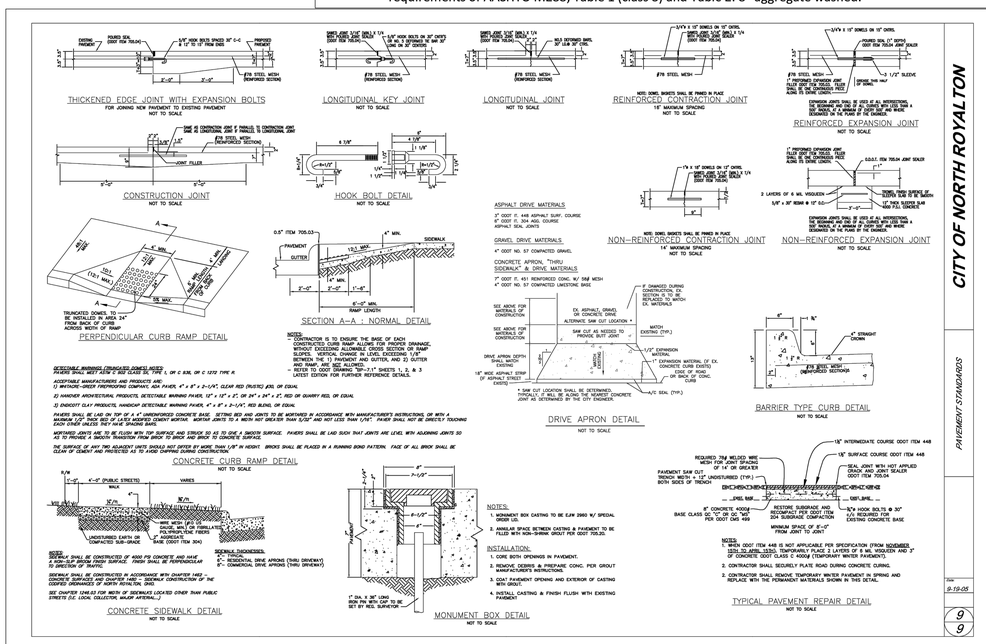


# WOODLAND BEND SUBDIVISION

CITY OF NORTH ROYALTON - CUYAHOGA COUNTY - OHIO


POLARIS ENGINEERING & SURVEYING, INC.
34600 CHARDON ROAD - SUITE D
WILLOUGHBY HILLS, OHIO 44094
(440) 944-4433 (440) 944-3722 (Fax)
www.polaris-es.com


polaris Engineering & Surveying

# PAVEMENT & INTERSECTION DETAIL

CONTRACT No.
22057

| SHEET | OF |
|---|---|
| 15 | 17 |

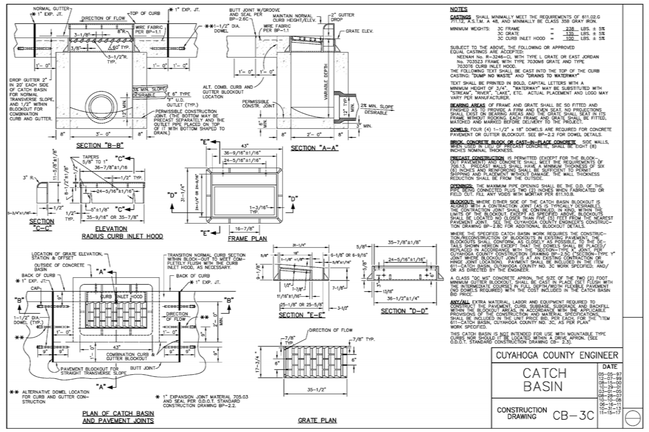


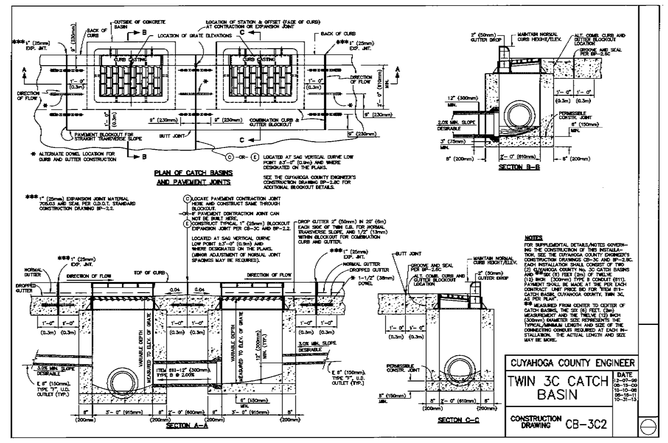


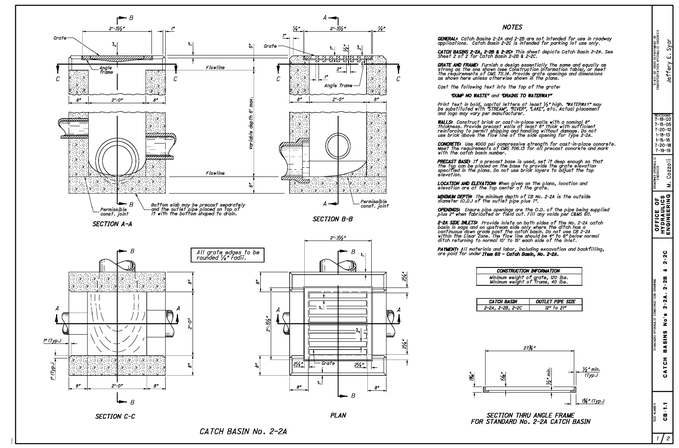


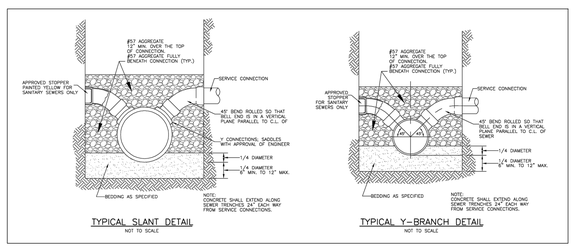


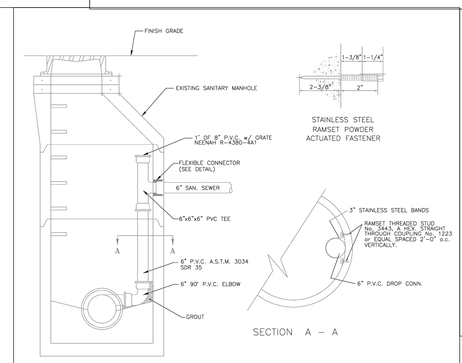


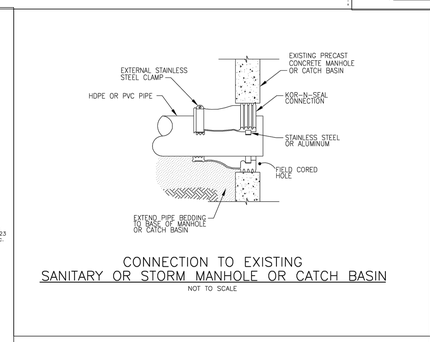


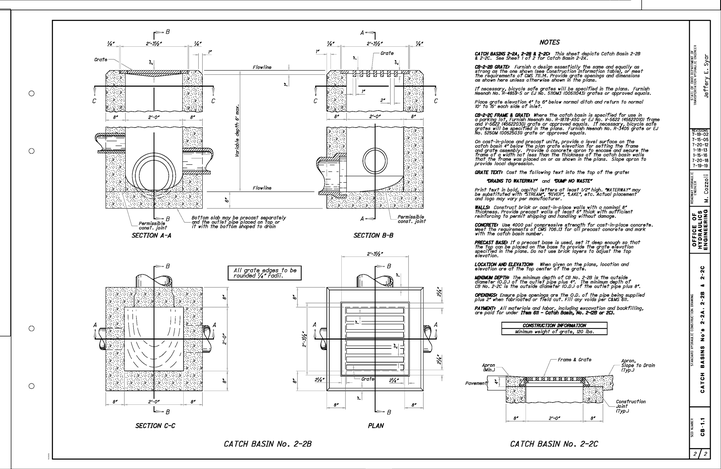


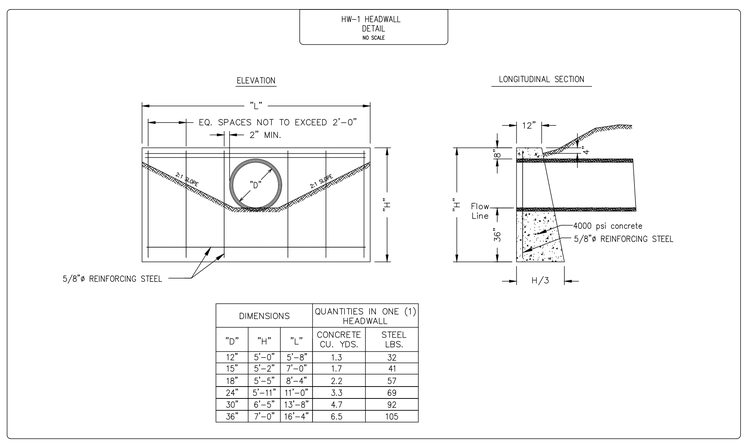


| DIMENSIONS | | | QUANTITIES IN ONE (1) HEADWALL | |
|---|---|---|---|---|
| "D" | "H" | "L" | CONCRETE CU. YDS. | STEEL LBS. |
| 12" | 5'-0" | 5'-8" | 1.3 | 32 |
| 15" | 5'-2" | 7'-0" | 1.7 | 41 |
| 18" | 5'-5" | 8'-4" | 2.2 | 57 |
| 24" | 5'-11" | 11'-0" | 3.3 | 69 |
| 30" | 6'-5" | 13'-8" | 4.7 | 92 |
| 36" | 7'-0" | 16'-4" | 6.5 | 105 |

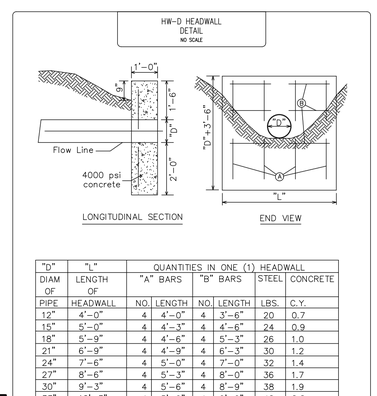


| "D" DIAM OF PIPE | "L" LENGTH OF HEADWALL | QUANTITIES IN ONE (1) HEADWALL "A" BARS NO. | LENGTH | "B" BARS NO. | LENGTH | STEEL LBS. | CONCRETE C.Y. |
|---|---|---|---|---|---|---|---|
| 12" | 4'-0" | 4 | 4'-0" | 4 | 3'-6" | 20 | 0.7 |
| 15" | 5'-0" | 4 | 4'-3" | 4 | 4'-6" | 24 | 0.9 |
| 18" | 5'-9" | 4 | 4'-6" | 4 | 5'-3" | 26 | 1.0 |
| 21" | 6'-9" | 4 | 4'-9" | 4 | 6'-3" | 30 | 1.2 |
| 24" | 7'-6" | 4 | 5'-0" | 4 | 7'-0" | 32 | 1.4 |
| 27" | 8'-6" | 4 | 5'-3" | 4 | 8'-0" | 36 | 1.7 |
| 30" | 9'-3" | 4 | 5'-6" | 4 | 8'-9" | 38 | 1.9 |
| 33" | 10'-3" | 4 | 5'-9" | 4 | 9'-9" | 42 | 2.2 |
| 36" | 11'-0" | 4 | 6'-0" | 4 | 10'-6" | 44 | 2.4 |

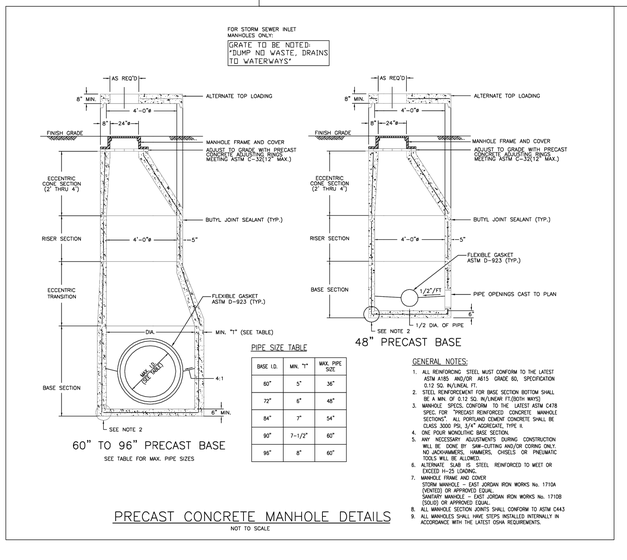


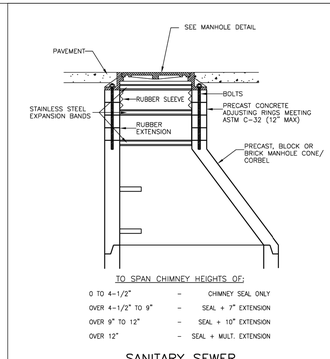


| REV. No. | | DATE | BY |
|---|---|---|---|
| | | | |
| | | | |
| | | | |
| | | | |
| | | | |

DATE: 2/5/24 DRAWN: NMO
SCALE: HOR. N/A VERT. N/A
FOLDER: DWG/Proj. Engineering
FILENAME: 22057 T.N.D.
TAB: 16-Sewer Details
BNDY. CHK: MPS
BASE. CHK: KTH

# WOODLAND BEND SUBDIVISION

CITY OF NORTH ROYALTON - CUYAHOGA COUNTY - OHIO


POLARIS ENGINEERING & SURVEYING, INC.
34600 CHARDON ROAD - SUITE D
WILLOUGHBY HILLS, OHIO 44094
(440) 944-4433 (440) 944-3722 (Fax)
www.polaris-es.com


# SEWER DETAILS

| CONTRACT No. | |
|---|---|
| 22057 | |
| SHEET 16 | OF 17 |

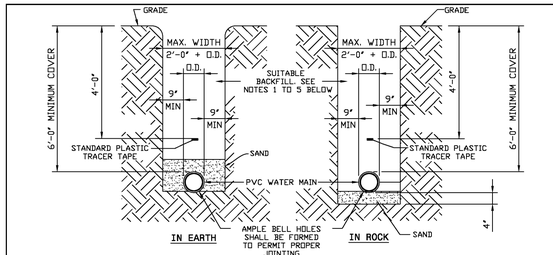


## WATER MAIN TRENCH DETAILS

- NOT TO SCALE -

NOTES:
1) SUITABLE BACKFILL SHALL CONSIST OF EXCAVATED MATERIAL FREE OF ROCK ( >3"), FROZEN EARTH AND DEBRIS. THE BACKFILL SHALL NOT BE ALLOWED TO FREE-FALL ONTO THE PREVIOUSLY PLACED PIPE. THE CONTRACTOR SHALL CONSOLIDATE THE BACKFILL IN SUCH A MANNER TO ENSURE THE MINIMUM POSSIBLE SETTLEMENT. PREMIUM BACKFILL IS REQUIRED UNDER EXISTING OR FUTURE PAVEMENTS, SIDEWALKS, AND/OR DRIVES OR WHEN REQUIRED BY THE LOCAL MUNICIPALITY. PREMIUM BACKFILL SHALL BE FULL DEPTH OF THE TRENCH.
2) PREMIUM BACKFILL SHALL BE LIMESTONE SCREENINGS GRADED PER ODOT 304.08 OR ODOT 411. NO SLAG IS PERMITTED.
3) CONTRACTOR SHALL USE SPECIAL CARE IN PLACING THE BACKFILL SO AS TO AVOID INJURING THE PIPE, DISTORTING OR MOVING THE PIPE WHEN PLACING THE BACKFILL.
4) MINIMUM COMPACTION FOR PREMIUM BACKFILL SHALL BE 95% STANDARD PROCTOR.
5) PAVEMENT, SIDEWALK OR DRIVES TO BE INSTALLED IN ACCORDANCE WITH LOCAL MUNICIPALITY'S SPECIFICATIONS.

PVC-001 | DATE: 11-1-09 | BY: DR

ALL PUSH ON JOINTS BETWEEN BENDS TO BE BOLTLESS RESTRAINED TYPE II (UNLESS OTHERWISE NOTED).
ALL 4" WATER MAIN TO BE DUCTILE IRON (CLASS 52) CEMENT LINED PIPE (UNLESS OTHERWISE NOTED).

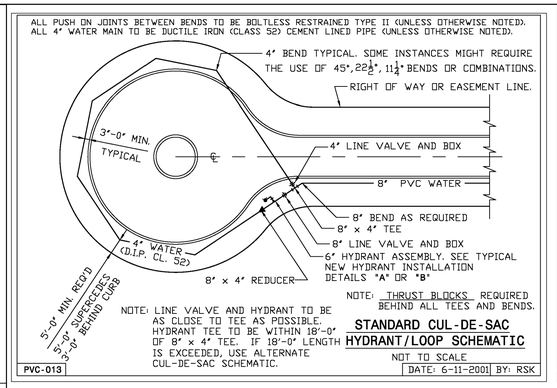


NOTE: LINE VALVE AND HYDRANT TO BE AS CLOSE TO TEE AS POSSIBLE. HYDRANT TEE TO BE WITHIN 18'-0" OF 8" x 4" TEE. IF 18'-0" LENGTH IS EXCEEDED, USE ALTERNATE CUL-DE-SAC SCHEMATIC.

NOTE: THRUST BLOCKS REQUIRED BEHIND ALL TEES AND BENDS.

## STANDARD CUL-DE-SAC HYDRANT/LOOP SCHEMATIC

NOT TO SCALE

PVC-013 | DATE: 6-11-2001 | BY: RSK

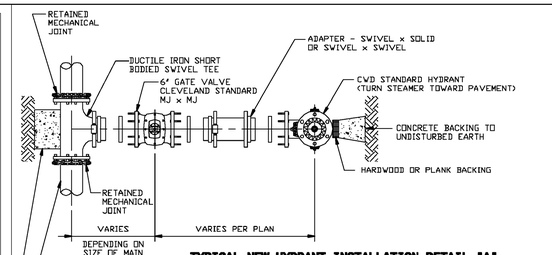


## TYPICAL NEW HYDRANT INSTALLATION DETAIL "A"

- NOT TO SCALE -

NOTE: IN LIEU OF SWIVEL BRANCH TEES AND ADAPTERS CONTRACTORS MAY FURNISH HYDRANT BRANCHES HAVING RETAINED MECHANICAL JOINTS INCLUDING HYDRANT SHOE. ALL MECHANICAL JOINTS SHALL HAVE FIELD APPLIED ONE (1) COAT OF BITUMASTIC PAINT. ALL MECHANICAL JOINTS SHALL BE POLYETHYLENE WRAPPED IN ACCORDANCE WITH AWWA C-1-5/A21.5-88 CLASS "C" METHOD 'B'.

ALL BOLTS AND NUTS FURNISHED WITH RETAINED MECHANICAL JOINTS INCLUDING RETAINER OR WEDGE ACTION TYPE GLANDS SHALL BE COPPER-BEARING DUCTILE IRON, OR EQUIVALENT HIGH STRENGTH, LOW ALLOY CORROSION RESISTANT STEEL.

STD-H09 | DATE: 3-4-2002 | BY: RSK

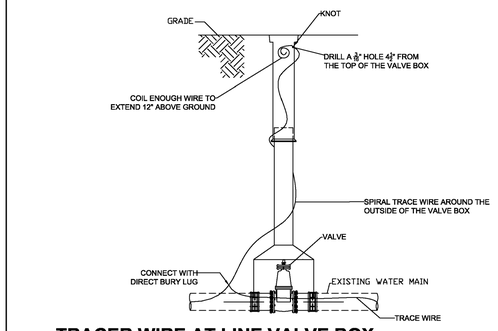


## TRACER WIRE AT LINE VALVE BOX

- NOT TO SCALE -

PVC-TW03 | DATE: 11-1-09 | BY: DCR

# WOODLAND BEND SUBDIVISION

CITY OF NORTH ROYALTON - CUYAHOGA COUNTY - OHIO

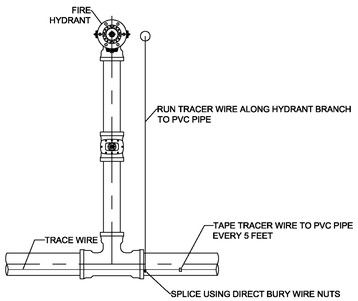


## TRACER WIRE AT HYDRANT TEE

- NOT TO SCALE -

PVC-TW02 | DATE: 11-1-09 | BY: DCR

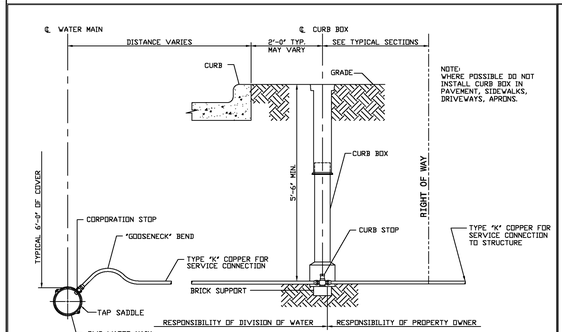


NEW 1" SERVICE CONNECTION DETAIL IN PUBLIC RIGHT OF WAY

- NOT TO SCALE -

PVC-C04 | DATE: 6-14-2001 | BY: RSK

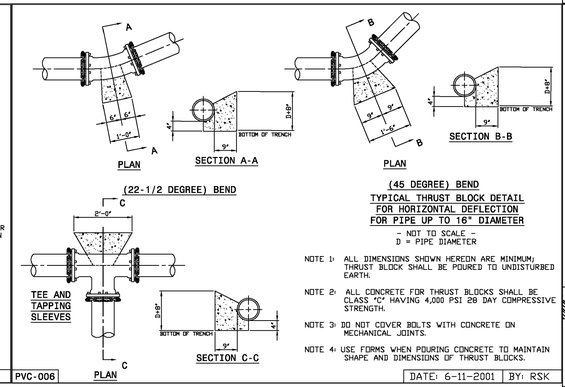


NOTE 1: ALL DIMENSIONS SHOWN HEREON ARE MINIMUM; THRUST BLOCK SHALL BE POURED TO UNDISTURBED EARTH.

NOTE 2: ALL CONCRETE FOR THRUST BLOCKS SHALL BE CLASS "C" HAVING 4,000 PSI 28 DAY COMPRESSIVE STRENGTH.

NOTE 3: DO NOT COVER BOLTS WITH CONCRETE ON MECHANICAL JOINTS.

NOTE 4: USE FORMS WHEN POURING CONCRETE TO MAINTAIN SHAPE AND DIMENSIONS OF THRUST BLOCKS.

PVC-006 | DATE: 6-11-2001 | BY: RSK

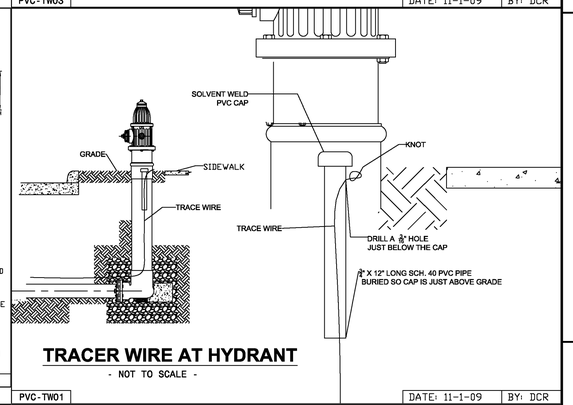


## TRACER WIRE AT HYDRANT

- NOT TO SCALE -

PVC-TW01 | DATE: 11-1-09 | BY: DCR

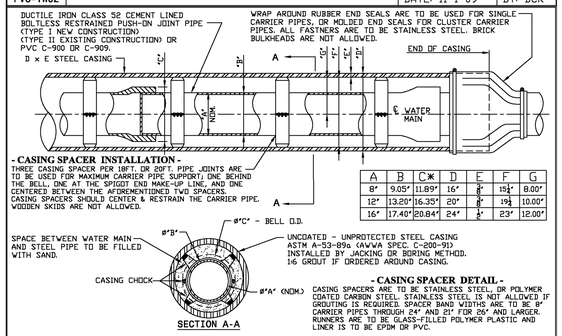


- CASING SPACER INSTALLATION -
THREE CASING SPACER PER 18FT. OR 20FT. PIPE JOINTS ARE TO BE USED FOR MAXIMUM CARRIER PIPE SUPPORT; ONE BEHIND THE BELL, ONE AT THE SPIGOT END MAKE-UP LINE, AND ONE CENTERED BETWEEN THE AFOREMENTIONED TWO SPACERS. CASING SPACERS SHOULD CENTER & RESTRAIN THE CARRIER PIPE. WOODEN SKIDS ARE NOT ALLOWED.

| A | B | C* | D | E | F | G |
|---|---|---|---|---|---|---|
| 8" | 9.05" | 11.89" | 16" | 8" | 19½" | 8.00" |
| 12" | 13.20" | 16.35" | 20" | 8" | 19½" | 10.00" |
| 16" | 17.40" | 20.64" | 24" | 8" | 23" | 12.00" |




SECTION A-A

- CASING SPACER DETAIL -
CASING SPACERS ARE TO BE STAINLESS STEEL, OR POLYMER COATED CARBON STEEL. STAINLESS STEEL IS NOT ALLOWED IF GROUTING IS REQUIRED. SPACER BAND WIDTHS ARE TO BE 8" CARRIER PIPES THROUGH 24" AND 21" FOR 26" AND LARGER. RUNNERS ARE TO BE GLASS-FILLED POLYMER PLASTIC AND LINER IS TO BE EPDM OR PVC.

NOTES:
1. CONTRACTOR'S FAILURE TO MAINTAIN THE CASING PIPE ON THE LINE AND GRADE AS SHOWN OR DIRECTED, RESULTING IN THE USE OF ADDITIONAL PIPE AND/OR FITTINGS TO MAKE CONNECTIONS TO EXISTING WATER MAIN WILL BE CAUSE FOR REJECTION OF CASING INSTALLATION.

*2 OUTSIDE DIAMETER OF BELL OF BOLTLESS RESTRAINED PIPE MAY VARY WITH MANUFACTURE, THEREFORE, CONTRACTOR SHALL VERIFY O.D. OF BELL AND INCREASE SIZE OF STEEL CASING AS REQUIRED.

PVC-016 | CASING DETAIL No. 2 END OF CASING AND CASING CHOCK DETAIL | DATE: 1-21-2010 | BY: RSK

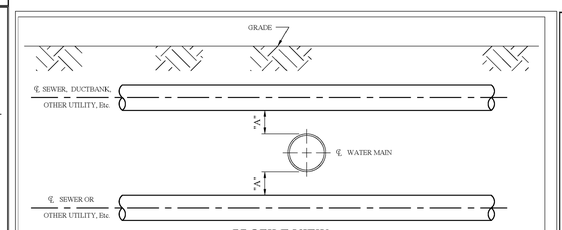


PROFILE VIEW

- SEE STD-017 FOR PLAN VIEW -

| VERTICAL CLEARANCE | SANITARY SEWER LESS THAN 24" | SANITARY SEWER 24" & LARGER | STORM SEWER, DUCTBANK, GAS, OTHER UTILITY LESS THAN 24" | STORM SEWER, DUCTBANK, GAS, OTHER UTILITY 24" & LARGER | REMARKS |
|---|---|---|---|---|---|
| "A" | 18" Min. | 18" Min. | 18" Min. | 18" Min. | IF CANNOT ACHIEVE MIN. CLEARANCE WATER MAIN TO BE LOWERED |

VERTICAL CLEARANCE FOR UTILITIES

NOT TO SCALE

STD-018 | DATE: 7-02-2014 | BY: MTA

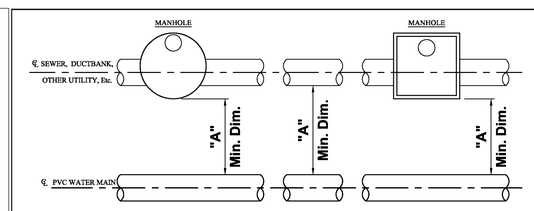


PLAN VIEW

- SEE STD-018 FOR PROFILE VIEW -

| HORIZONTAL CLEARANCE | STORM SEWER | SANITARY SEWER | GAS, DUCTBANK, OTHER UTILITY, Etc. |
|---|---|---|---|
| "A" | 10'-0" MIN. | 10-0" MIN. | 5'-0" MIN. |

HORIZONTAL CLEARANCE FOR UTILITIES

NOT TO SCALE

PVC-017 | DATE: 12-29-2016 | BY: FSR

*CONNECTION SHALL BE MADE WITH RETAINED MECHANICAL JOINT SOLID SLEEVES (SHORT OR LONG PATTERN) DUCTILE IRON CLASS 250 OR CAST IRON CLASS 250 OR COMPRESSION COUPLINGS.

COMPRESSION COUPLINGS SHALL BE OF A GASKETED, SLEEVE TYPE WITH DIAMETERS TO PROPERLY FIT PLAIN END IRON PIPE. EACH COUPLING SHALL CONSIST OF ONE (1) MIDDLE RING, WITHOUT STOPS; TWO (2) FOLLOWER GLANDS; TWO (2) RUBBER-COMPOUND BUNA-N BLEND, WEDGE SECTION GASKETS; AND SUFFICIENT TRACKHEAD STAINLESS STEEL BOLTS AND NUTS (ASTM A276/A193/194, TYPE 304, EXTRA HEAVY HEX) TO PROPERLY COMPRESS THE GASKETS.

MIDDLE RING AND FOLLOWER GLANDS SHALL BE OF EITHER STEEL OR DUCTILE IRON (ASTM-A536).

THE COMPRESSION COUPLING SHALL BE WITHOUT STOPS AND BE RATED FOR A MINIMUM WORKING PRESSURE OF 250 PSI AND SHALL BE EQUAL TO THE DRESSER STYLE NO's 38, 138 OR 162 (TRANSITION TYPE), OR SMITH-BLAIR (41) STRAIGHT AND TRANSITION COUPLINGS.

ALL BOLTS AND NUTS ON ALL MECHANICAL JOINTS, INCLUDING THOSE ON THE "RETAINED" TYPE, SHALL HAVE FIELD APPLIED ONE (1) COAT OF BITUMASTIC PAINTING FOLLOWED BY AN ENCASEMENT OF POLYETHYLENE WRAPPING IN ACCORDANCE WITH ANSI/AWWA C-105/A21.5-88, CLASS "C", METHOD "B".

THE DIVISION OF WATER WILL DETERMINE THE FIELD LOCATION OF THE CUT-IN-VALVE ASSEMBLY. THE DIVISION OF WATER WILL ALSO SET THE TIME OF INSTALLATION OF THE CUT-IN-VALVE ASSEMBLY.

THE CONTRACTOR SHALL DO ALL PIPE CUTTING AND INSTALLATION HOWEVER, THE INSTALLATION OF THE CUT-IN-VALVE ASSEMBLY SHALL BE DONE UNDER THE SUPERVISION OF THE DIVISION OF WATER.

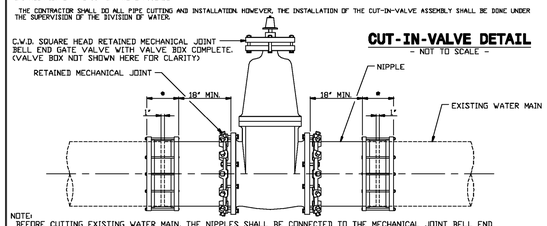


CUT-IN-VALVE DETAIL

- NOT TO SCALE -

NOTE:
BEFORE CUTTING EXISTING WATER MAIN, THE NIPPLES SHALL BE CONNECTED TO THE MECHANICAL JOINT BELL END GATE VALVE. AFTER CUTTING PIPE, FINAL CONNECTIONS SHALL BE MADE WITH COUPLINGS/SOLID SLEEVES AS SPECIFIED.

STD-006 | DATE: 10-1-97 | BY: RSK


POLARIS ENGINEERING & SURVEYING, INC.
34600 CHARDON ROAD - SUITE D
WILLOUGHBY HILLS, OHIO 44094
(440) 944-4433 (440) 944-3722 (Fax)
www.polaris-es.com


# WATER DETAILS

| REV. No. | | DATE | BY |
|---|---|---|---|
| | | | |
| | | | |
| | | | |
| | | | |
| | | | |

STATE OF OHIO KEVIN HOFFMAN 74831 REGISTERED PROFESSIONAL ENGINEER

DATE: 2/5/24 DRAWN: NMO
SCALE: HOR. N/A VERT. N/A
FOLDER: DWG/Proj. Engineering
FILENAME: 22057 T.N.D.
TAB: 17-Water Details
BNDY. CHK: MPS
BASE. CHK: KTH

CONTRACT No.
22057

| SHEET | OF |
|---|---|
| 17 | 17 |

GRAPHIC SCALE
50 0 25 50
(IN FEET)
1 INCH = 50 FEET

PROPOSED STREET TREE LOCATION
SUGAR-GREEN MOUNTAIN (MIN 2" CALIPER)

REQUIRED STREET TREES = 1/LOT = 20 TREES
PROVIDED STREET TREES = 20 TREES

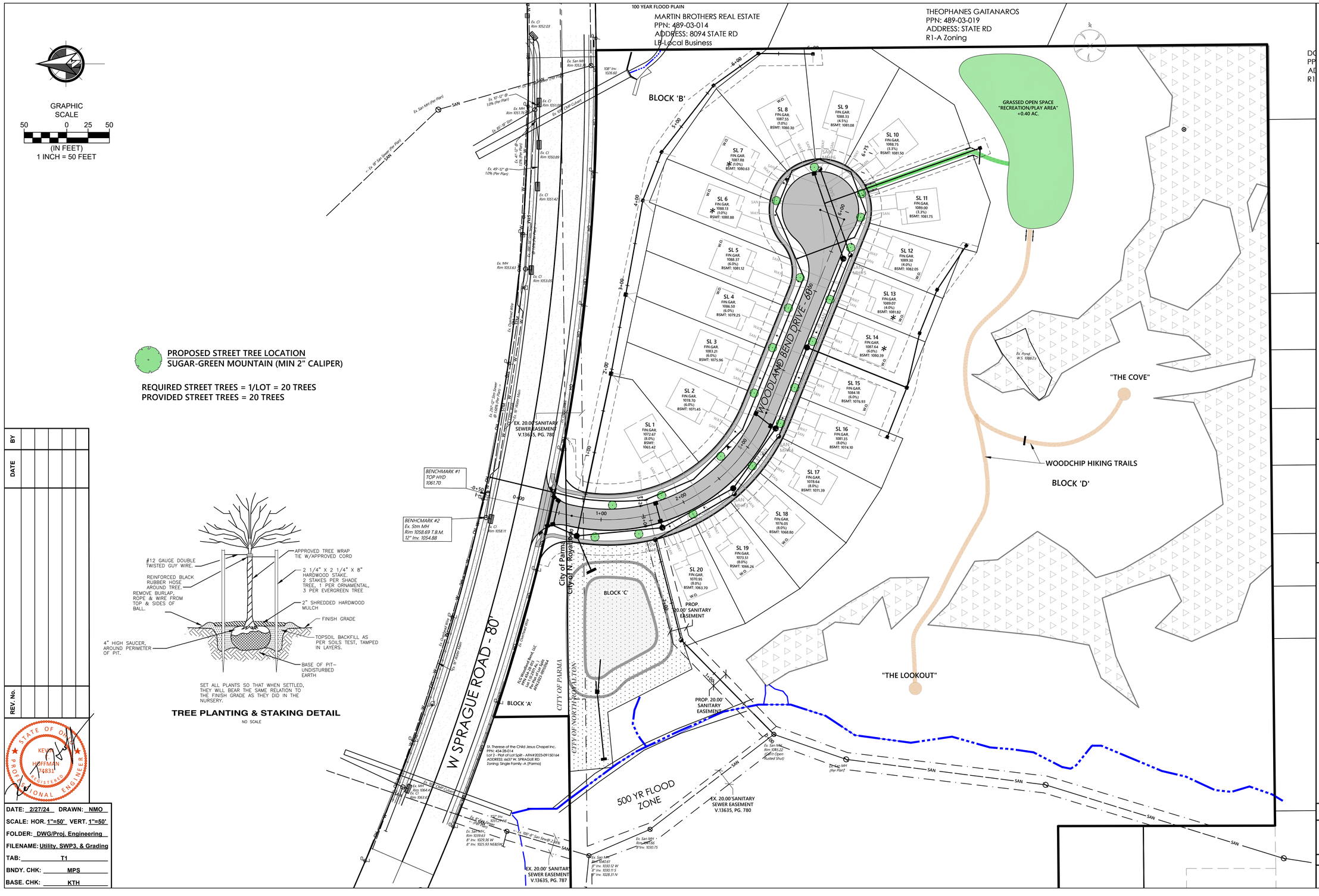





**TREE PLANTING & STAKING DETAIL**
NO SCALE

| REV. No. | DATE | BY |
|---|---|---|
| | | |

STATE OF OHIO
KEVIN HOFFMAN
74831
REGISTERED
PROFESSIONAL ENGINEER

DATE: 2/27/24 DRAWN: NMO
SCALE: HOR. 1"=50' VERT. 1"=50'
FOLDER: DWG/Proj. Engineering
FILENAME: Utility, SWP3, & Grading
TAB: T1
BNDY. CHK: MPS
BASE. CHK: KTH

# WOODLAND BEND SUBDIVISION

CITY OF NORTH ROYALTON - CUYAHOGA COUNTY - OHIO


POLARIS ENGINEERING & SURVEYING, INC.
34600 CHARDON ROAD - SUITE D
WILLOUGHBY HILLS, OHIO 44094
(440) 944-4433 (440) 944-3722 (Fax)
www.polaris-es.com


## STREET TREE PLAN

CONTRACT No.
22057

| SHEET | OF |
|---|---|
| T1 | T1 |

# WOODLAND BEND SUBDIVISION

Being a Subdivision of:
P.P.N. 489-02-033 - In Original Royalton Township Lot 11, and
PPN 454-28-013 In Original Parma Township Lot 42 - Ely Tract
February 2024

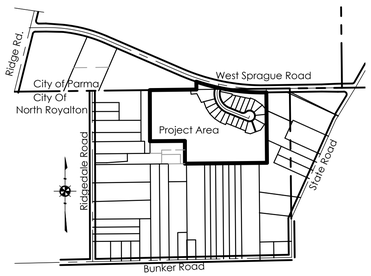


Vicinity Map Scale 1" = 800'

AREA TABULATION - RIGHT OF WAY
AREA IN RIGHT OF WAY (PARMA)..... 0.0391 ACRES
AREA IN RIGHT OF WAY
(NORTH ROYALTON)..... 0.9345 ACRES
AREA IN RIGHT OF WAY (TOTAL)..... 0.9736 ACRES

AREA TABULATION - BLOCKS
AREA IN BLOCKS (PARMA)..... 0.2580 ACRES
AREA IN BLOCKS
(NORTH ROYALTON) ..... 17.3597 ACRES
AREA IN BLOCKS (3 TOTAL)..... 17.6177 ACRES

AREA TABULATION (LOTS)
AREA IN SUBLOTS (20) ..... 3.9243 ACRES

AREA TABULATION - SUBDIVISION
AREA IN SUBDIVISION (PARMA)..... 0.2971 ACRES
AREA IN SUBDIVISION
(NORTH ROYALTON)..... 22.2185 ACRES
AREA IN SUBDIVISION (TOTAL)..... 22.5156 ACRES

ACCEPTANCE AND DEDICATION:

BE IT KNOWN THAT THE UNDERSIGNED, **MARK HOLZ**, AGENT FOR **FLG WOODLAND BEND, LLC**, HEREBY CERTIFIES THAT THIS PLAT CORRECTLY REPRESENTS ITS WOODLAND BEND SUBDIVISION, A SUBDIVISION OF SUBLOTS 1 THROUGH 20 INCLUSIVE, AND BLOCKS A, B, C, AND D, AND DOES HEREBY ACCEPT PLAT OF SAME AND DEDICATE TO PUBLIC USE, AS SUCH, ALL STREETS SHOWN HEREON AND DESIGNATED AS WOODLAND BEND DIRVE - SIXTY (60) FEET WIDE, AND DOES HEREBY GRANT UNTO THE HOMEOWNERS ASSOCIATION WITHIN THE WOODLAN BEND SUBDIVISION BLOCKS A & B & C AND THE EASEMENTS SHOWN HEREON, SAID AREAS ARE NOT GRANTED FOR USE BY THE GENERAL PUBLIC, BUT ARE GRANTED FOR THE COMMON USE AND ENJOYMENT OF THE HOMEOWNERS WITHIN THE WOODLAND BEND SUBDIVISION, AS MORE FULLY PROVIDED IN "THE WOODLAND BEND SUBDIVISION DECLARATION OF COVENANTS AND RESTRICTIONS", AS RECORDED AS AFN _____OF THE CUYAHOGA COUNTY RECORDS. THE TERMS AND CONDITIONS SET FORTH ARE HEREBY INCORPORATED BY REFERENCE AS THOUGH FULLY WRITTEN HEREIN AND EACH SUBLOT OWNER SHALL BE ENTITLED TO THE BENEFITS AND SUBJECT TO THE OBLIGATIONS THEREOF.

THE UNDERSIGNED FURTHER AGREES THAT ANY USE OF IMPROVEMENTS MADE ON THIS LAND SHALL BE IN CONFORMITY WITH ALL EXISTING VALID ZONING, PLATTING, HEALTH OR OTHER LAWFUL RULES AND REGULATIONS INCLUDING THE APPLICABLE OFF-STREET PARKING AND LOADING REQUIREMENTS OF THE CITY OF NORTH ROYALTON, OHIO AND THE CITY OF PARMA, OHIO (FOR BLOCK 'A' ONLY) AND FOR THE BENEFIT OF THEMSELVES AND ALL OTHER SUBSEQUENT OWNERS OR ASSIGNS TAKING TITLE FROM OR UNDER OR THROUGH THE UNDERSIGNED.

IN WITNESS WHEREOF, MARK HOLZ AGENT FOR FLG WOODLAND BEND, LLC, HAS HERETO SET ITS HAND

AT_____, OHIO, THIS____DAY OF_____, 20____.

BY:_____

SIGNED AND ACKNOWLEDGED IN THE PRESENCE OF:

STATE OF OHIO )
)
COUNTY OF_____ )
BEFORE ME, A NOTARY PUBLIC IN AND FOR SAID COUNTY AND STATE, PERSONALLY APPEARED THE ABOVE NAMED, MARK HOLZ WHO ACKNOWLEDGED THAT THEY DID SIGN THE FOREGOING INSTRUMENT AND THAT THE SAME IS THEIR VOLUNTARY ACT AND DEED.
IN TESTIMONY WHEREOF, I HAVE HEREUNTO SET MY HAND AND OFFICIAL SEAL AT_____, OHIO, THIS____DAY OF_____,
20____.

_____
NOTARY PUBLIC

THIS IS AN ACKNOWLEDGEMENT CLAUSE.
NO OATH OR AFFIRMATION WAS ADMINISTERED
TO THE SIGNER.

## MORTGAGE RELEASE:

BE IT KNOWN THAT _____, MORTGAGEE OF THE LAND INDICATED ON THIS PLAT DOES HEREBY JOIN IN THE ABOVE DEDICATION AND RELEASE FROM THE OPERATION AND LIEN OF THE MORTGAGE HELD BY IT, ON SAID PREMISES AS RECORDED IN DOCUMENT NO. _____, AND SHOWN WOODLAND BEND DRIVE - SIXTY (60) FEET WIDE, AND THE EASEMENTS HEREIN GRANTED AND RESERVED.

BY_____

STATE OF OHIO )
) SS:
COUNTY OF _____ )

IN WITNESS WHEREOF, I HAVE HEREUNTO SET MY HAND AND OFFICIAL SEAL AT _____
OHIO, THIS _____ DAY OF _____, 20__.

_____ _____ _____
NOTARY PUBLIC MY COMMISSION EXPIRES

THIS IS AN ACKNOWLEDGEMENT CLAUSE.
NO OATH OR AFFIRMATION WAS ADMINISTERED
TO THE SIGNER.

## SANITARY SEWER EASEMENTS

THE OWNERS OF THE WITHIN PLATTED LAND, DOES HEREBY GRANT UNTO THE CITY OF NORTH ROYALTON, **SANITARY SEWER EASEMENTS**, AS SHOWN ON THE PLAT, TO CONSTRUCT, PLACE, OPERATE, MAINTAIN, REPAIR, RECONSTRUCT, AND RELOCATE SUCH SANITARY SEWER CONDUITS AND APPURTENANCES. SAID EASEMENT RIGHTS SHALL INCLUDE THE RIGHT, WITHOUT LIABILITY THEREFORE, TO REMOVE ANY AND ALL FACILITIES NOT CONTEMPLATED IN THE RIGHTS CONVEYED TO GRANTEES BY THIS EASEMENT GRANT WITHIN SAID EASEMENT PREMISES, INCLUDING, BUT NOT LIMITED TO, IRRIGATION SYSTEMS, ELECTRICAL ANIMAL FENCES, TREES, AND LANDSCAPING INCLUDING LAWNS, FLOWERS OR SHRUBBERY AND LANDSCAPE LIGHTING WITHIN AND WITHOUT SAID EASEMENT PREMISES WHICH MAY INTERFERE WITH THE INSTALLATION, MAINTENANCE, REPAIR OR OPERATION OF SAID SANITARY SEWER FACILITIES, THE RIGHT TO OPERATE, INSTALL, REPAIR, AUGMENT, AND MAINTAIN SANITARY SEWERS WITHIN THE ABOVE DESCRIBED EASEMENT PREMISES, AND WITH THE RIGHT OF ACCESS, INGRESS AND EGRESS TO AND FROM ANY OF THE WITHIN DESCRIBED PREMISES FOR EXERCISING ANY OF THE PURPOSES OF THE RIGHT OF WAY AND EASEMENT GRANT.

FURTHERMORE, THE CITY OF NORTH ROYALTON, THRU ACCEPTANCE AND ADOPTION OF THIS PLAT, DOSE HEREBY PARTIALLY RELEASE A PORTION OF THE SANITARY SEWER EASEMENT THAT WAS GRANTED TO THE CITY IN VOLUME 13635, Pg. 781 OF THE CUYAHOGA COUNTY RECORDS. AREAS BEING RELEASED ARE AS DESCRIBED AND DELINEATED ON SHEET 2 OF THIS PLAT.

## DRAINAGE AND STORM WATER MANAGEMENT EASEMENTS:

THE OWNERS OF THE WITHIN PLATTED LAND, DOES HEREBY GRANT UNTO THE WOODLAND BEND HOMEOWNERS ASSOCIATION AND THE CITY OF NORTH ROYALTON **DRAINAGE & STORM WATER MANAGEMENT EASEMENTS**, AS SHOWN ON THE PLAT, TO CONSTRUCT, PLACE, OPERATE, MAINTAIN, REPAIR, RECONSTRUCT, AND RELOCATE SUCH DRAINAGE CONDUITS, SWALES, WATER QUALITY FEATURES, AND PONDS. SAID EASEMENT RIGHTS SHALL INCLUDE THE RIGHT, WITHOUT LIABILITY THEREFORE, TO REMOVE ANY AND ALL FACILITIES NOT CONTEMPLATED IN THE RIGHTS CONVEYED TO GRANTEES BY THIS EASEMENT GRANT WITHIN SAID EASEMENT PREMISES, INCLUDING, BUT NOT LIMITED TO, IRRIGATION SYSTEMS, ELECTRICAL ANIMAL FENCES, TREES, AND LANDSCAPING INCLUDING LAWNS, FLOWERS OR SHRUBBERY AND LANDSCAPE LIGHTING WITHIN AND WITHOUT SAID EASEMENT PREMISES WHICH MAY INTERFERE WITH THE INSTALLATION, MAINTENANCE, REPAIR OR OPERATION OF SAID DRAINAGE, THE RIGHT TO OPERATE, INSTALL, REPAIR, AUGMENT, AND MAINTAIN DRAINAGE WITHIN THE ABOVE DESCRIBED EASEMENT PREMISES, AND WITH THE RIGHT OF ACCESS, INGRESS AND EGRESS TO AND FROM ANY OF THE WITHIN DESCRIBED PREMISES FOR EXERCISING ANY OF THE PURPOSES OF THE RIGHT OF WAY AND EASEMENT GRANT. PERPETUAL MAINTENANCE OF THE FACILITIES IS THE RESPONSIBILITY OF THE HOMEOWNERS ASSOCIATION. SHOULD THE HOME ONWERS ASSOCIATION FAIL TO PERFORM THESE DUTIES, THE CITY OF NORTH ROYALTON MAY PERFORM THE WORK AND ASSESS THE HOMEOWNERS FOR ANY WORK OR MAINTENANCE TO THE DRAIN SYSTEM, SWALES, OR POND NOT PERFORMED BY THE HOMEOWNERS ASSOCIATION.

## UTILITY EASEMENT:

THE OWNERS OF THE WITHIN PLATTED LAND, DO HEREBY GRANT UNTO THE CITY OF NORTH ROYALTON AND TO UTILITIES INCLUDING BUT NOT LIMITED TO, FIRST ENERGY, AT&T, CHARTER COMMUNICATIONS, BREEZELINE, THEIR SUCCESSORS AND ASSIGNS (HEREINAFTER REFERRED TO AS GRANTEES) A PERMANENT **UNDERGROUND UTILITY EASEMENT TWELVE (12)** FEET IN WIDTH UNDER, OVER AND THROUGH ALL SUBLOTS AS SHOWN HEREIN, PARALLEL WITH AND CONTIGUOUS TO ALL STREET LINES TO CONSTRUCT, PLACE, OPERATE, MAINTAIN, REPAIR RECONSTRUCT AND RELOCATE SUCH UNDERGROUND ELECTRIC AND COMMUNICATIONS CABLES, DUCTS, CONDUITS; AND SURFACE OR BELOW GROUND MOUNTED TRANSFORMERS AND PEDESTALS, CONCRETE PADS AND OTHER FACILITIES AS ARE DEEMED NECESSARY OR CONVENIENT BY THE GRANTEES FOR DISTRIBUTING ELECTRICITY, AND COMMUNICATION SIGNALS FOR PUBLIC OR PRIVATE USE AT SUCH LOCATIONS AS GRANTEES MAY DETERMINE UPON, WITHIN, AND ACROSS THE EASEMENT PREMISES. SAID EASEMENT RIGHTS SHALL INCLUDE THE RIGHT TO REMOVE TREES AND LANDSCAPING INCLUDING LAWNS WITHIN AND WITHOUT SAID EASEMENT PREMISES, WHICH MAY INTERFERE WITH THE INSTALLATION, REPAIR, MAINTENANCE OR OPERATION OF SAID ELECTRIC AND COMMUNICATION FACILITIES, THE RIGHT TO INSTALL, REPAIR, AUGMENT AND MAINTAIN SERVICE CABLES OUTSIDE OF THE ABOVE DESCRIBED EASEMENT PREMISES AND THE RIGHT OF ACCESS, INGRESS AND EGRESS TO AND FROM ANY OF THE WITHIN DESCRIBED PREMISES FOR EXERCISING ANY OF THE PURPOSES OF RIGHT OF WAY AND EASEMENT GRANT. ALL SUBLOTS SHALL BE RESTRICTED TO UNDERGROUND UTILITY SERVICE.

GRANTED BY: _____ (OWNER)

THIS____DAY OF_____, 20_____.

BY:_____

ACCEPTED BY FIRST ENERGY THIS____DAY OF_____,
20_____.

BY:_____
FIRST ENERGY RIGHT - OF - WAY DIVISION

ACCEPTED BY AT&T THIS____DAY OF_____,
20_____.

BY:_____
AT&T RIGHT - OF - WAY DIVISION

ACCEPTED BY CHARTER COMMUNICATIONS THIS____DAY OF_____,
20_____.

BY:_____
CHARTER COMMUNICATIONS RIGHT - OF - WAY DIVISION

ACCEPTED BY BREEZELINE THIS____DAY OF_____,
20_____.

BY:_____
BREEZELINE RIGHT - OF - WAY DIVISION

## CITY OF NORTH ROYALTON APPROVALS:

THE CITY COUNCIL
THIS PLAT HAS BEEN ACCEPTED BY THE COUNCIL OF THE CITY OF NORTH ROYALTON, OHIO, FOR DEDICATION BY ORDINANCE NO. _____ADOPTED THIS_____DAY OF ___ _____, 20_____.

_____
LEGISLATIVE DIRECTOR

PLANNING COMMISSION
THIS PLAT HAS BEEN APPROVED BY THE PLANNING COMMISSION OF THE CITY OF NORTH ROYALTON, OHIO, ADOPTED THIS _____ DAY OF _____ 20_____

_____
SECRETARY

CITY ENGINEER
THIS PLAT HAS BEEN APPROVED BY THE ENGINEER OF THE CITY OF NORTH ROYALTON, OHIO, ADOPTED THIS _____ DAY OF _____ 20_____

_____
JUSTIN HASELTON, CITY ENGINEER

## CITY OF PARMA APPROVALS:

THE CITY OF PARMA HEREBY ACCEPTS THE DEDICATION OF WOODLAND BEND DRIVE WITHIN THE CITY OF PARMA FOR PLATTING PURPOSES ONLY. PERPETUAL MAINTENANCE & REPAIR OF ALL INFRASTRUCTURE LOCATED WITHIN THE WOODLAND BEND DRIVE RIGHT OF WAY LIMITS AND WITHIN THE CITY OF PARMA SHALL BE BY THE CITY OF NORTH ROYALTON. THIS INCLUDES BUT IS NOT LIMITED TO ALL PAVEMENT, SANITARY AND STORM SEWER SYSTEMS, WATER MAINS, AND RELATED APPURTENANCES TO THESE SYSTEMS.

THE CITY COUNCIL
THIS PLAT HAS BEEN ACCEPTED BY THE COUNCIL OF THE CITY OF PARMA, OHIO, FOR DEDICATION BY ORDINANCE NO. _____ADOPTED THIS_____DAY OF _____, 20_____.

_____
LEGISLATIVE DIRECTOR

PLANNING COMMISSION
THIS PLAT HAS BEEN APPROVED BY THE PLANNING COMMISSION OF THE CITY OF PARMA, OHIO, ADOPTED THIS _____ DAY OF _____ 20_____

_____
SECRETARY

CITY ENGINEER
THIS PLAT HAS BEEN APPROVED BY THE ENGINEER OF THE CITY OF PARMA, OHIO, ADOPTED THIS _____ DAY OF _____ 20_____

_____
CITY ENGINEER

SURVEYOR'S CERTIFICATION:

I HEREBY CERTIFY THAT I HAVE SURVEYED THE PREMISES AND PREPARED THE ATTACHED PLAT IN ACCORDANCE WITH THE PROVISIONS OF CHAPTER 4733-37 OF THE OHIO ADMINISTRATIVE CODE AND THE DIMENSIONS ARE IN FEET AND DECIMAL PARTS THEREOF, ALL OF WHICH ARE CORRECT TO THE BEST OF MY KNOWLEDGE AND BELIEF. IRON MONUMENTS OR PINS AS INDICATED WERE FOUND OR SET AS SHOWN HEREON. THE TERM CERTIFY AS USED IN THIS STATEMENT IS UNDERSTOOD TO BE THE PROFESSIONAL OPINION OF THE SURVEYOR WHICH IS FORMULATED ON HIS BEST KNOWLEDGE, INFORMATION AND BELIEF, AND AS SUCH, IT DOES NOT CONSTITUTE A GUARANTEE OR WARRANTY, EITHER EXPRESSED OR IMPLIED. THIS PLAT WAS PREPARED WITHOUT THE BENEFIT OF AN ABSTRACT OF TITLE AND IS SUBJECT TO ANY STATE OF FACTS REVEALED BY A EXAMINATION OF THE SAME. ALL IRON PINS SET ARE 5/8" X 30" LONG REBAR WITH A PLASTIC CAP STAMPED "POLARIS". BEARINGS REFER TO THE OHIO COORDINATE SYSTEM OF 1983 - NORTH ZONE 1986 ADJUSTMENT.

Michael P. Spellacy 2/27/24
MICHAEL P. SPELLACY P.S. #8169 DATE

STATE OF OHIO
MICHAEL P. SPELLACY 8169
REGISTERED
PROFESSIONAL SURVEYOR

DATE: 2/5/24 DRAWN: MPS
SCALE: HOR.VARIES VERT. 1"=00'
FOLDER: DWG/Proj. Surveying
FILENAME: Survey Base Record Plat
TAB: 01-RECORD PLAT
BNDY. CHK: MPS
BASE. CHK: N/A

polaris Engineering & Surveying

POLARIS ENGINEERING & SURVEYING, INC.
34600 CHARDON ROAD - SUITE D
WILLOUGHBY HILLS, OHIO 44094
(440) 944-4433 (440) 944-3722 (Fax)
www.polaris-es.com

**WOODLAND BEND SUBDIVISION**

**CITY OF NORTH ROYALTON - CITY OF PARMA**
**CUYAHOGA COUNTY - OHIO**

| CONTRACT No. | |
|---|---|
| 22057 | |
| SHEET | OF |
| 1 | 3 |

| PARCEL CURVE TABLE | | | | | | |
|---|---|---|---|---|---|---|
| CURVE | LENGTH | RADIUS | DELTA | CHORD | BEARING | TANGENT |
| C1 | 528.08' | 2291.88' | 13°12'06" | 526.91' | N84°16'53"W | 265.21' |
| C2 | 441.81' | 2291.88' | 11°02'42" | 441.12' | N72°09'29"W | 221.59' |
| C3 | 969.89' | 2291.88' | 24°14'48" | 962.67' | S78°45'32"E | 492.31' |
| C4 | 280.66' | 200.00' | 80°24'11" | 258.19' | S27°52'55"E | 169.02' |
| C5 | 151.92' | 2331.88' | 3°43'58" | 151.90' | S77°58'37"E | 75.99' |
| C6 | 29.88' | 35.00' | 48°54'44" | 28.98' | S33°00'49"W | 15.92' |
| C7 | 140.52' | 170.00' | 47°21'36" | 136.55' | S15°07'22"E | 74.55' |
| C8 | 86.88' | 170.00' | 29°16'51" | 85.94' | S53°26'35"E | 44.41' |
| C9 | 34.06' | 50.00' | 39°02'03" | 33.41' | S87°36'02"E | 17.72' |

BOUNDARY SURVEY LEGEND

- 5/8" X 30" IRON PIN (ID: POLARIS) SET
- IRON PIN FOUND AS NOTED
- IRON PIPE FOUND AS NOTED
- MONUMENT BOX WITH 5/8" X 30" IRON PIN (ID: POLARIS) SET
- MONUMENT BOX FOUND AS NOTED

- PROPOSED SANITARY SEWER EASEMENT
- PORTION OF EXISTING SANITARY SEWER EASEMENT TO BE RELEASED BY NORTH ROYALTON
- PROPOSED STORM WATER MANAGEMENT EASEMENT

GRAPHIC SCALE
30 0 15 30 60 120
(IN FEET)
1 INCH = 30 FEET

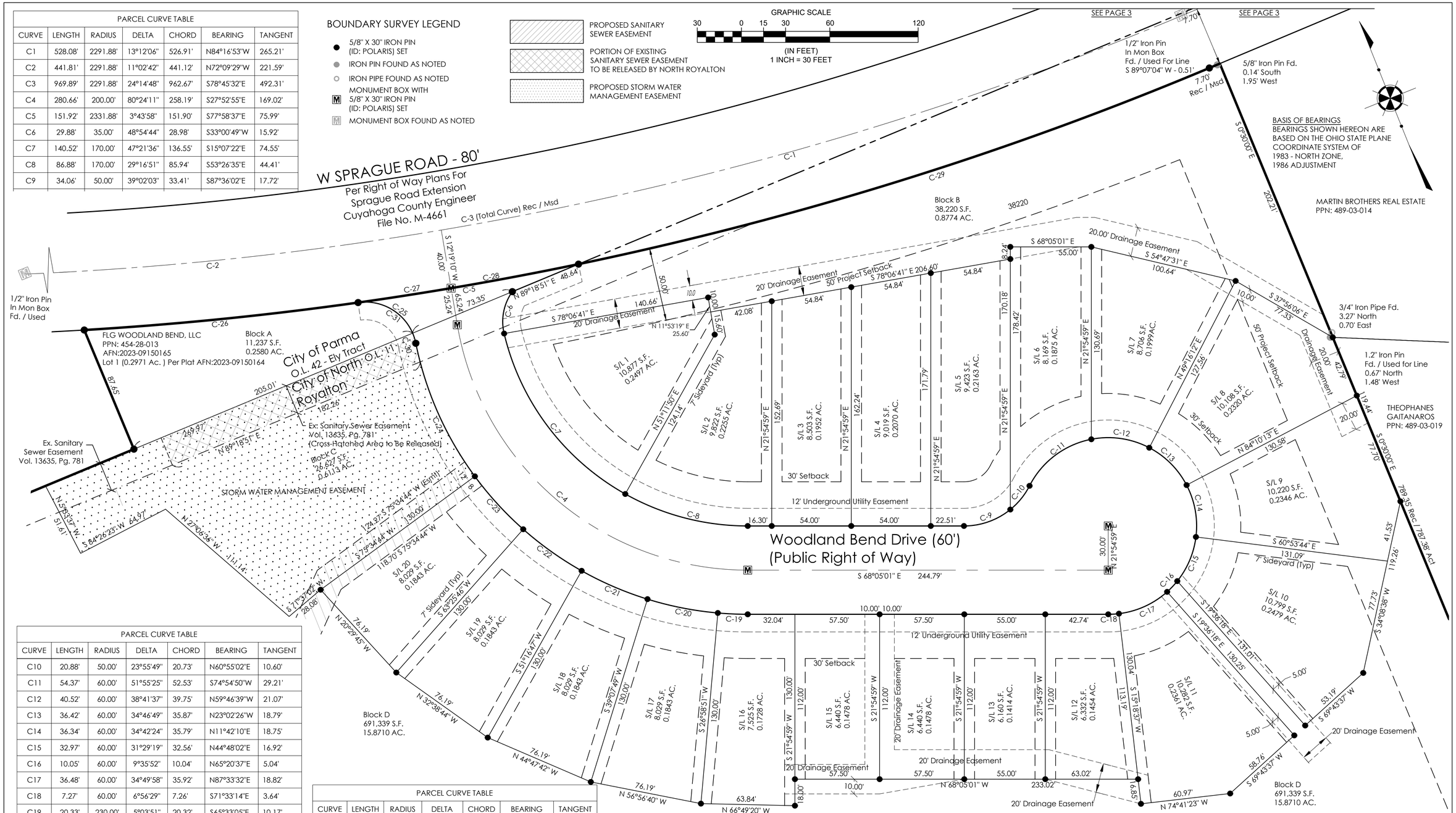


| PARCEL CURVE TABLE | | | | | | |
|---|---|---|---|---|---|---|
| CURVE | LENGTH | RADIUS | DELTA | CHORD | BEARING | TANGENT |
| C10 | 20.88' | 50.00' | 23°55'49" | 20.73' | N60°55'02"E | 10.60' |
| C11 | 54.37' | 60.00' | 51°55'25" | 52.53' | S74°54'50"W | 29.21' |
| C12 | 40.52' | 60.00' | 38°41'37" | 39.75' | N59°46'39"W | 21.07' |
| C13 | 36.42' | 60.00' | 34°46'49" | 35.87' | N23°02'26"W | 18.79' |
| C14 | 36.34' | 60.00' | 34°42'24" | 35.79' | N11°42'10"E | 18.75' |
| C15 | 32.97' | 60.00' | 31°29'19" | 32.56' | N44°48'02"E | 16.92' |
| C16 | 10.05' | 60.00' | 9°35'52" | 10.04' | N65°20'37"E | 5.04' |
| C17 | 36.48' | 60.00' | 34°49'58" | 35.92' | N87°33'32"E | 18.82' |
| C18 | 7.27' | 60.00' | 6°56'29" | 7.26' | S71°33'14"E | 3.64' |
| C19 | 20.33' | 230.00' | 5°03'51" | 20.32' | S65°33'05"E | 10.17' |
| C20 | 48.77' | 230.00' | 12°08'58" | 48.68' | S56°56'40"E | 24.48' |
| C21 | 48.77' | 230.00' | 12°08'58" | 48.68' | S44°47'42"E | 24.48' |
| C22 | 48.77' | 230.00' | 12°08'58" | 48.68' | S32°38'44"E | 24.48' |
| C23 | 48.77' | 230.00' | 12°08'58" | 48.68' | S20°29'45"E | 24.48' |
| C24 | 99.64' | 230.00' | 24°49'21" | 98.87' | S2°00'36"E | 50.62' |
| C25 | 52.85' | 35.00' | 86°30'42" | 47.97' | N32°51'16"W | 32.93' |

| PARCEL CURVE TABLE | | | | | | |
|---|---|---|---|---|---|---|
| CURVE | LENGTH | RADIUS | DELTA | CHORD | BEARING | TANGENT |
| C26 | 186.92' | 2331.88' | 4°35'34" | 186.87' | S73°48'51"E | 93.51' |
| C27 | 63.90' | 2331.88' | 1°34'12" | 63.90' | S76°53'44"E | 31.95' |
| C28 | 88.02' | 2331.88' | 2°09'46" | 88.02' | S78°45'43"E | 44.02' |
| C29 | 449.27' | 2331.88' | 11°02'20" | 448.58' | S85°21'46"E | 225.33' |
| C30 | 7.23' | 35.00' | 11°50'02" | 7.22' | N4°29'04"E | 3.63' |
| C31 | 45.62' | 35.00' | 74°40'40" | 42.46' | N38°46'17"W | 26.70' |

DATE: 2/27/24 DRAWN: MPS
SCALE: HOR.1"= 30' VERT. 1"=00'
FOLDER: DWG/Proj. Surveying
FILENAME: Survey Base Record Plat
TAB: 02-RECORD PLAT
BNDY. CHK: MPS
BASE. CHK: N/A

polaris Engineering & Surveying

POLARIS ENGINEERING & SURVEYING, INC.
34600 CHARDON ROAD - SUITE D
WILLOUGHBY HILLS, OHIO 44094
(440) 944-4433 (440) 944-3722 (Fax)
www.polaris-es.com

# WOODLAND BEND SUBDIVISION

CITY OF NORTH ROYALTON - CITY OF PARMA
CUYAHOGA COUNTY - OHIO

CONTRACT No. 22057

SHEET 2 OF 3

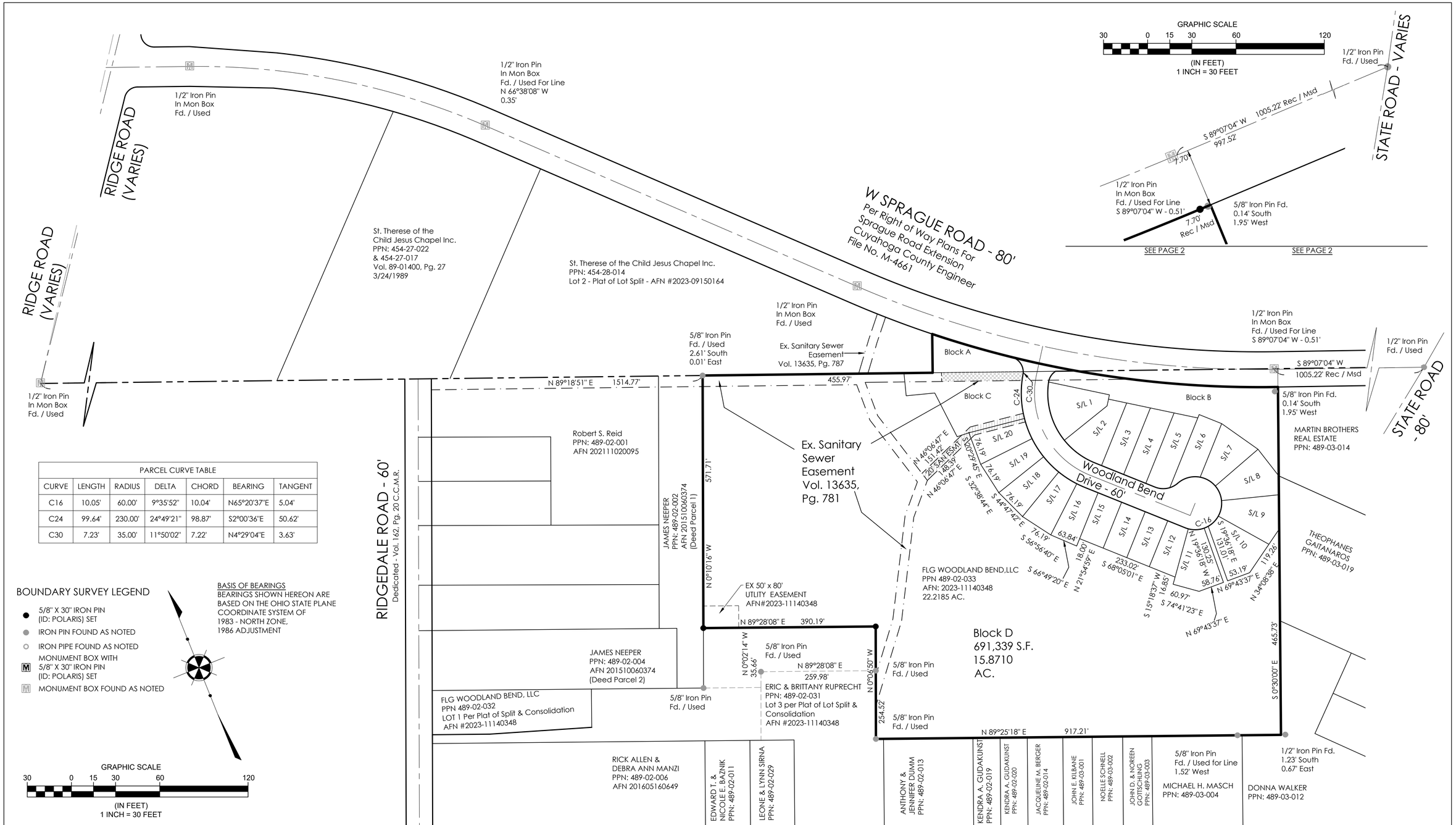


| PARCEL CURVE TABLE | | | | | | |
|---|---|---|---|---|---|---|
| CURVE | LENGTH | RADIUS | DELTA | CHORD | BEARING | TANGENT |
| C16 | 10.05' | 60.00' | 9°35'52" | 10.04' | N65°20'37"E | 5.04' |
| C24 | 99.64' | 230.00' | 24°49'21" | 98.87' | S2°00'36"E | 50.62' |
| C30 | 7.23' | 35.00' | 11°50'02" | 7.22' | N4°29'04"E | 3.63' |

BOUNDARY SURVEY LEGEND

- 5/8" X 30" IRON PIN (ID: POLARIS) SET
- IRON PIN FOUND AS NOTED
- IRON PIPE FOUND AS NOTED
- MONUMENT BOX WITH 5/8" X 30" IRON PIN (ID: POLARIS) SET
- MONUMENT BOX FOUND AS NOTED

BASIS OF BEARINGS
BEARINGS SHOWN HEREON ARE BASED ON THE OHIO STATE PLANE COORDINATE SYSTEM OF 1983 - NORTH ZONE, 1986 ADJUSTMENT

GRAPHIC SCALE
30 0 15 30 60 120
(IN FEET)
1 INCH = 30 FEET

PROPOSED SANITARY SEWER EASEMENT

PORTION OF EXISTING SANITARY SEWER EASEMENT TO BE RELEASED BY NORTH ROYALTON

DATE: 2/5/24 DRAWN: MPS
SCALE: HOR:1"= 100' VERT. 1"=00'
FOLDER: DWG/Proj. Surveying
FILENAME: Survey Base Record Plat
TAB: 03-RECORD PLAT
BNDY. CHK: MPS
BASE. CHK: N/A

polaris Engineering & Surveying

POLARIS ENGINEERING & SURVEYING, INC.
34600 CHARDON ROAD - SUITE D
WILLOUGHBY HILLS, OHIO 44094
(440) 944-4433 (440) 944-3722 (Fax)
www.polaris-es.com

# WOODLAND BEND SUBDIVISION

CITY OF NORTH ROYALTON - CITY OF PARMA
CUYAHOGA COUNTY - OHIO

CONTRACT No. 22057

SHEET 3 OF 3