SWEETWATER COUNTY SUBDIVISION REGULATIONS

Revised March 2012

Table of Contents

Section		Page
1.	Authority	1
2.	Short Title	1
3.	Purpose and Application	1
	a. Purpose	1
	b. Application	2
	c. Exemptions	2
4.	Administration and Enforcement	5
	a. Administration	5
	b. Affidavits of Corrections	6
	c. Replat	6
	d. Appeals	6
	e. Variances	6
	f. Recording	7
	g. Vacation	7
	h. Penalties	8
5.	Procedures for Platting	9
	a. Minor Subdivision	9
	b. Sketch Plat	10
	c. Preliminary Plat	12
	d. Final Plat	16
	e. Replat	26
6.	Fees	29
7.	Bond	30
8.	Design Standards	31
	a. General Standards	31
	b. Provisions for Needed Public Facilities	31
	c. Roads, Streets, and Alleys	33
	d. Lots and Blocks	35
	e. Fire Protection	36
	f. Drainage	37
9.	Improvements	38
	a. Assurances	38
	b. Required Improvements	39
	c. Inspections	40

d. Construction Standards and Testing 41
e. As-Built Plans 42
f. Acceptance of Subdivision Improvements 42

10. Grading Permit Regulations 44
a. Purpose and Intent 44
b. Permit Required 44
c. Grading Plan 44
d. Dust Control 44
e. Maximum Slope 45
f. Erosion 45
g. Fills 45
h. Drainage 45
i. Exemption 45

11. Severability 47

12. Legal Status of Regulations 47

13. Amendments 47

14. Definitions 48

Appendix A – Standard of Details 52

Table of Actions 78

Section 1. Authority

This Resolution is adopted pursuant to, in accordance with, and as an exercise of the authority vested in the Board of County Commissioners of Sweetwater County by Wyoming Statutes Annotated, 1977 Republished Edition, Title 18, Chapter 5, Section 18-5-301 and Section 18-5-305 amended.

Section 2. Short Title

This Resolution shall be known, cited, and referred to as the Subdivision Regulations of Sweetwater County, Wyoming.

Section 3. Purpose and Application

a. Purpose

These regulations have been adopted with the following purposes in mind:

(1) To provide for and protect the public health, safety, and general welfare of the citizens of Sweetwater County.

(2) To assist in carrying out the recommendations and policies of a duly adopted Comprehensive Plan.

(3) To protect and conserve the value of land and the value of buildings and improvements upon the land throughout the County and to minimize the conflicts among the uses of land and buildings.

(4) To establish reasonable standards of design and procedures for subdivisions and re-subdivisions in order to further the orderly layout and use of the land and to insure proper legal descriptions and monumenting of subdivided land.

(5) To guide public and private policy and action in order to provide adequate and efficient transportation, water, sewers, schools, parks, playgrounds, recreation, and other public facilities.

(6) To provide the most beneficial relationship between the proposed uses of the land and the circulation of traffic throughout the County with particular regard to the avoidance of congestion on streets and highways, the separation of vehicular and pedestrian movements, and the proper location and width of streets and roads.

(7) To prevent the pollution of air, streams, and ponds; to assure the adequacy of drainage facilities; to safeguard the water table; and to encourage the wise use and management of natural resources throughout the County in order to preserve the integrity, stability, and beauty of the County and the value of the land.

b. Application

These regulations shall apply to all unincorporated lands within Sweetwater County, Wyoming.

(1) Every person having an interest in any tract or parcel of land who may hereafter subdivide or re-subdivide land for immediate or future purpose of sale, building development or re-development for residential, recreational, industrial, commercial, or public uses shall submit a subdivision plat or plats, and shall secure a Subdivision Permit in accordance with the provisions of these regulations.

c. Exemptions

(1) Unless the method of sale or other disposition is adopted for the purpose of evading the provisions of this article, this article shall not apply to the following subdivisions of land however, the following subdivisions are subject to requirements which may be adopted by the board of county commissioners regarding documentation of the proper use and implementation of the following exemptions:

(a) A division of land made outside of platted subdivisions for the purpose of a single gift or sale to a member of the landowner's immediate family, subject to the following requirements:

(i) A member of the immediate family is limited to any person who is a natural or adopted child, stepchild, spouse, sibling, grandchild, grandparent or parent of the landowner;

(ii) The purpose of the division is to provide for the housing, business or agricultural needs of the grantee;

(iii) The land shall have been titled in the name of the grantor or in the name of a trust controlled by the grantor for a combined period prior to the division of not less than five years for land titled before February 27, 2019, or ten (10) years for land titled on after February 27, 2019. Parcels created under this paragraph shall be titled in the name of the immediate family member for whom the division is made for a period of not less than five (5) years, or for not less than one (1) year if the parcel was created before February 27, 2019 unless the parcels are subject to involuntary transfer including, but not limited to, foreclosure, death, judicial sale, condemnation or bankruptcy;

(iv) No parcel smaller than five (5) acres created under this paragraph shall be further divided unless the owner obtains a subdivision

permit pursuant to W.S. 18-5-304;

(v) Where the landowner is a corporation and eighty percent (80%) of the shares are held by individuals related by blood or marriage, the sale or gift may be made subject to the provisions of this section to an immediate family member of any shareholder who has owned at least five percent (5%) of the outstanding shares for at least five (5) years continuously before the date of the sale or gift.

(b) A division which may be created by any court of this state pursuant to the law of eminent domain, by operation of law or by order of any court in this state; except that this paragraph shall not exempt a partition of real property pursuant to W.S. 1-32-101 through 1-32-122 from compliance with this article if the division would otherwise be subject to the provisions of this article;

(c) A division which is created by a lien, mortgage, deed of trust or any other security instrument, easements and rights-of-way;

(d) Lands located within incorporated cities or towns;

(e) A division which is created by the sale or other disposition of land to the state of Wyoming or any political subdivision thereof;

(f) A division which affects railroad rights-of-way;

(g) A division which is a sale or other disposition of land for agricultural purposes or affects the alignment of property lines for agricultural purposes;

(h) A division which is created by boundary line adjustments where the parcel subject of the sale or other disposition is adjacent to and merged with other land owned by the grantee;

(i) A division which creates cemetery lots;

(j) A division which is created by the acquisition of an interest in land in the name of the husband and wife or other persons in joint tenancy or as tenants in common, and the interest shall be deemed for purposes of this subsection as only one (1) interest;

(k) A division of land creating a parcel five (5) acres or less for the purpose of establishing unmanned communication facilities, compressor stations, metering stations, fiber optic booster stations or similar unmanned facilities.

(l) The sale or disposition of separate parcels of land that were separate when lawfully created or conveyed and which have not been combined by a recorded instrument of conveyance signed by all the owners.

(2) Except as provided in W.S. 18-5-316, These regulations shall not apply to the sale or other disposition of land where the parcels involved are thirty-five (35) acres or larger, subject to the requirement that ingress and egress and utility easements shall be provided to each parcel by binding and recordable easements of not less than forty (40) feet in width to a public road unless specifically waived by the grantee or transferee in a binding and recordable document.

Section 4. Administration and Enforcement

a. Administration.

The provisions of these regulations shall be administered and enforced by the Sweetwater County Land Use Department.

(1) No person shall subdivide land nor commence the physical layout or construction on the ground of a subdivision without first obtaining the approval of the Board of Commissioners of Sweetwater County in the form of a Subdivision Permit.

(2) When any part of a subdivision lies outside the limits of an incorporated city or town but within one (1) mile of the boundary of an incorporated city or town, that subdivision shall be approved by the governing body of the city or town before it is finally approved by the Board of County Commissioners, filed in the Office of the County Clerk and Recorder, and a Subdivision Permit issued therefore.

(3) All plats submitted to the Board of Commissioners of Sweetwater County shall first have been examined by the Sweetwater County Planning and Zoning Commission in accordance with the procedures established by these regulations. As a part of its examination the Planning and Zoning Commission may consult with any interested public or private agency for the purpose of determining whether or not the plat is in full conformity with all requirements for the orderly growth and development of Sweetwater County. The County Land Use Department shall receive all materials required to be submitted by these regulations, and they shall be reviewed and evaluated by the Planning and Zoning Commission. After concluding its examination, the Commission shall communicate its findings and recommendations to the Board of County Commissioners in writing. The Land Use Department, the Commission, and the Board shall be guided by the procedures and schedules hereinafter set forth. The Planning and Zoning Commission may adopt supplementary rules in accordance with the statutes of the State of Wyoming. Such rules and procedures shall be available for public inspection.

b. Affidavits of Correction.

Minor amendments to the Final Plat are filed with the Sweetwater County Clerk and Recorder to correct minor survey or drafting errors in a recorded plat or accompanying documents. These Minor Amendments shall be prepared in the form of an Affidavit of Correction. Affidavits shall be signed and dated by any person having interest in the property and the Sweetwater County Engineer's Office before they are recorded in the County Clerk and Recorder's Office.

c. Replat

The alteration of lot lines, boundary lines, the division of one lot into not more than two lots or the combination of contiguous lots into one lot within a platted subdivision shall be considered a Replat and shall follow the requirements for Replat. Subsequent divisions of lots which have been divided through a Replat shall only be allowed through the minor or major subdivision process.

d. Appeals

The administration of these regulations may be appealed.

(1) Any subdivider aggrieved by the action of the Sweetwater County Planning and Zoning Commission or its administrative staff of Sweetwater County in their administration of the provisions of this Resolution may, in writing, request a hearing before the Board of County Commissioners. The written request shall be submitted within thirty (30) days of the action alleged to be unjust, and shall state the specific relief which the subdivider seeks. Within thirty (30) days of the receipt of such a request the Board shall hold a public hearing to determine the proper application of these regulations. At the hearing the Board shall consider not only the subdivider's appeal, but also the written or verbal comments of the Board, Commission, Agency, or person and note the decision in its official records. The subdivider will then proceed in his attempts to subdivide his land based upon this decision of the Board. The decision will be binding upon all agencies and administrative personnel of Sweetwater County.

(2) Any subdivder aggrieved by the action of the Board of County Commissioners of Sweetwater County in their administration of the provisions of this Resolution may seek judicial review in accordance with the Wyoming Administrative Procedures Act and the Wyoming Rules of Civil Procedure.

e. Variances

(1) When it can be shown by the subdivider that in the case of a particular subdivision strict compliance with the provisions of these regulations would cause undue hardship, the Board of County Commissioners may authorize a variance to these requirements, provided that such a variance is not in conflict with state law. The granting of any variance shall be in writing and must meet all of the following conditions:

(a) That owing to extraordinary circumstances literal enforcement of the provisions of this Resolution will result in undesirable characteristics such as traffic movement, lot design, or utility extensions.

(b) That the Variance, if granted, will not cause any off-site problems such as traffic, utilities, drainage, water, and sanitation on other properties.

(c) That the Variance, if granted, will not substantially or permanently injure any adjacent conforming property.

(d) That the Variance, if granted, is the minimum variance and the least modification that will afford the relief sought.

(e) That the Variance will be in harmony with the spirit of this Resolution and will not adversely affect the public health, safety, or welfare.

(2) All requests for Variances will be submitted in writing and will be referred to the Planning and Zoning Commission for comment and recommendations prior to any action being taken by the Board of County Commissioners. The findings and actions of the Board with respect to each Variance request shall be stated in writing to the Land Use Department. In granting approval the Board may require such conditions as will insure substantial compliance with the objectives and standards of these regulations.

(3) Any application for a Variance shall be submitted concurrent with the Preliminary Plat and acted upon by the Planning and Zoning Commission. The provisions of any Variance granted by the Board of County Commissioners shall be incorporated by reference through Variance Resolution Number on the Final Plat.

f. Recording

A Subdivision Permit shall be issued only with the successful completion of the final plat. The plat shall be filed by the County Clerk and Recorder among the official records of the County within one hundred and eighty (180) days of the date of the signature.

g. Vacation

Recorded plats may subsequently be vacated.

(1) Any plat may be vacated by the proprietors thereof at any time before the sale of any lots therein by a written instrument declaring the same to be vacated, duly executed, acknowledged, or proved, and recorded in the same office with the plat to be vacated; and the execution and recording of such writing shall operate to destroy the force and effect of the recording of the plat so vacated, and to divest all public rights in the streets, alleys, commons, and public grounds laid out or described in such plat; and in cases where any lots have been sold, the plat may be vacated as herein provided by all the owners of the lots in such plat joining in the execution of the writing aforesaid.

(2) Streets and alleys plated and laid out under the provisions of these regulations or laid out under any prior law of the State of Wyoming regulating private plats may be altered or vacated in the manner provided by law for the alteration and discontinuance of highways.

(3) Any part of a plat may be vacated under the provisions and subject to the conditions of this Resolution provided such vacating does not abridge or destroy any of the rights and privileges of other proprietors in said plat, and provided further that nothing contained in this Section shall authorize the closing or obstruction of any public highways laid out according to law.

(4) When any part of a plat shall be vacated as aforesaid, the proprietors of the lots so vacated may enclose the streets, alleys, and public grounds adjoining lots in equal proportions.

(5) The County Clerk shall write in plain, legible letters across that part of said plat so vacated the word "vacated", and also make a reference on the same to the volume and page in which the said instrument of vacation is recorded.

(6) The owner of any lots in a plat so vacated may cause the same and a proportionate part of adjacent streets and public grounds to be platted and numbered by the County Surveyor; and when such plat is acknowledged by such owner and is recorded in the Clerk's Office of the County, such lots may be conveyed and assessed by the numbers given them on such plat.

h. Penalties

Any person who willfully violates any provision of these regulations and any person who as an agent for a subdivider, developer, or owner of subdivided lands offers for sale any subdivided lands or subdivisions without first complying with the provisions of these regulations shall upon conviction be fined not more than five hundred dollars ($500) or be imprisoned in a County Jail for not more than thirty (30) days or be punished by both fine and imprisonment. Each day of violations constitutes a new offense.

Section 5. Procedures for Platting

a. Minor Subdivision

(1) Any person requesting approval of a Minor Subdivision shall submit his request to the Land Use Department on a form supplied by the Land Use Department which application shall include the information required in Subsection (2). Property subject to the Minor Subdivision process shall be subdivided only once through that process.

(2) The Board of County Commissioners may approve Minor Subdivision requests meeting certain established guidelines. These guidelines are:

(a) The property division will create no more than four (4) lots.

(b) Each building site, tract, or lot has access to either an existing County approved road or street.

(c) The applicant submits to the Land Use Department the following:

(i) A completed application form supplied by the Planning Department.

(ii) A Sketch Plat with requirements as set forth under Section 5b. entitled "Sketch Plat".

(iii) Upon notification by staff of Sketch Plat approval, a Final Plat is submitted. The Final Plat shall conform to Section 5d. entitled "Final Plat".

(iv) The applicant shall be responsible for having his application reviewed by applicable utilities. Information requested from these agencies are as follows:

(A) Easements required (same should be placed on the plat); and,

(B) Line capacity and ability of utility to provide service both at present and in the future.

(v) In cases where the subdivision will utilize private roads of adjacent lands, a road maintenance agreement shall also be executed with the adjacent landowners and notarized. Maintenance agreements shall also be executed for other common facilities used by both landowners.

(A) In cases where internal roads or other facilities will be maintained (including snow removal) by the property owners themselves, a homeowner's association or similar entity shall be formed to assure such common maintenance prior to final approval.

(vi) Completed Deed of Dedication forms, where necessary, for the dedication of additional right-of-way along County roads. These rights-of-way must be shown on the plat.

(vii) School site and/or open space dedication or fee-in-lieu of as required by Section 8b. of this Resolution as amended.

b. Sketch Plat

(1) Prior to the submission of a Preliminary Plat as authorized by these regulations, the subdivider shall prepare and submit a Sketch Plat and supporting material in two (2) copies to the County Land Use Department. The Land Use Department shall review the Sketch Plat with the subdivider and make comments in writing. Any written comments shall be made known to the subdivider within five (5) working days after submittal of the plat. The Sketch Plat may be on a single sheet of paper with a north arrow, and shall contain sufficient information to illustrate the nature of the area to be subdivided and an approximation of how the subdivider intends to subdivide. This information, at a minimum, shall be:

(a) Location of the property within the County showing relationship to adjacent properties.

(b) Boundaries of the area to be subdivided.

(c) Topographic contours according to available U.S. Geological Survey maps or other suitable information.

(d) Significant natural features such as woods, lakes, ridges, drainage ways, etc.

(e) Significant man-made features such as roads, railroads, buildings, etc.

(f) Tentative street, block, and lot layout.

(g) Proposed major use areas such as residential, commercial, industrial, or public.

(h) Acreage of the proposed development.

(i) The source of water and sewer service.

(j) The name and address of the landowner, the subdivider, and the person or firm responsible for the layout or design and the date of submittal.

(k) Estimated sequence or timing of development.

(l) Existing easements.

(m) Soil types as indicated by available data from the U.S. Soil Conservation Service.

(n) Scales should be either 1:10, 20, 30, 40, 50, or 100. NOTE: The scale may be 1:2000 if the lots average one (1) acre or larger.

(o) Existing use and approximate location of uses on adjoining properties.

(p) Date of preparation.

(2) The purpose of the Sketch Plat discussion is to resolve any major points of disagreement with the Land Use Department before expenses are incurred in the development of a Preliminary Plat. No action is required of the County Planning and Zoning Commission nor of the Land Use Department other than to offer appropriate comments on the Sketch Plat.

(3) It is the policy of Sweetwater County to encourage the planning and layout for development of all the contiguous property owned by an applicant in order to make provision for adequate access, traffic and pedestrian circulation, roadways, drainage, fire protection, utilities and public and private improvements in the area to be developed.

If a Major Subdivision is to be phased, a Sketch Phasing Plan must be included in the Sketch Plat.

For a Sketch Phasing Plan, the County requires an applicant to show on his Plan all contiguous property owned by the applicant and to show how the applicant plans to make provisions for public and private infrastructure to serve the area to be developed, adequate access, circulation, utilities and public and private accesses and traffic circulation within all phases of his subdivision and any connections with surrounding property.

The Sketch Phasing Plan must show which utilities will be public and private, and the planned installation of utilities, fire protection, drainage, and roadways.

The proposed boundary lines of each phase, with soil types from Sweetwater County Soil Conservation District, must be shown and an estimated time table for development of each phase must be provided on the Sketch Phasing Plan.

c. Preliminary Plat.

(1) A Preliminary Plat with sheet size of 24x36 inches shall be submitted within six (6) months after the date of submittal of a Sketch Plat on the same property. The developer shall be notified within seven (7) working days as to the completeness of submittal. Margins shall be as follows: A minimum of 1 ½ inches on the left hand side and approximately ½ inch on the other three sides. If more than six (6) months have elapsed, then a new Sketch Plat shall be submitted and discussed with the Land Use Department before the submittal of a Preliminary Plat.

(2) The Preliminary Plat shall be prepared, certified, and perimeter boundary staked by a land surveyor registered in the State of Wyoming.

(3) Preliminary Plats shall be submitted in twelve (12) copies to the County Land Use Department. At a minimum, Preliminary Plats shall meet the design standards set forth in these regulations and shall contain or be accompanied by the following information:

(a) The name of the subdivision. The name shall not duplicate any previously filed plat names in Sweetwater County.

(b) Date of preparation, scale, and north arrow. Subdivision shall normally be drawn at a scale not less than 1" = 100'. A scale of 1" = 200' may be used if the average lot size is one (1) acre or larger. The top of each sheet shall represent north wherever possible.

(c) A Vicinity Map showing the location of the proposed subdivision in the County and its relationship to any surrounding development. The Vicinity Map may be at a scale smaller than the scale at which the Preliminary Plat is drawn. U.S. Geological survey maps at a scale of 1:24,000; or if not available, 1:62,500 should be used for Vicinity Maps.

(d) The names, addresses, and phone numbers of the landowner, the subdivider, and the individual or firm responsible for the layout or design. NOTE: All signatures shall be in opaque black India ink.

(e) A legal description of the subdivision boundary.

(f) Boundary lines of the subdivision in a heavy solid line.

(g) Existing contours with intervals of two (2) feet or five (5) feet in areas where much of the land is in excess of 10 percent (10%) grade.

(h) Location, dimensions, and names of existing and proposed roads, streets, alleys, railroad rights-of-way, public areas, and existing structures.

(i) Location and bearings of all easements of record.

(j) Layout, lot and/or block, and scaled dimensions of lots and blocks.

(k) Existing and proposed zoning and land use of proposed subdivision and adjacent areas.

(l) A description of all monuments both found and set which mark the boundary of the subdivision and ties by bearings and distances to the nearest accepted control monuments used in conducting the survey. All monumentation set shall conform to the "Guidelines for the Professional Practice of Land Surveying" currently adopted by the Wyoming Association of Consulting Engineers and Surveyors.

(m) A statement explaining how water and sewer service is to be provided to the subdivision.

(n) A statement explaining how and when the subdivider proposes to install sewers or other suitable sanitary disposal systems, water supply, fire hydrants, pavement, sidewalks, drainage ways, and other required improvements.

(o) A notation of the total number of acres, number of lots, acreage of commercial or industrial areas, area of open space, amount of land in rights-of-way, and other descriptive material useful in reviewing the subdivision.

(p) A written statement describing the development and maintenance responsibility for any private streets, ways, or open spaces.

(q) A statement of all lands within the subdivision which is to be publicly dedicated or reserved, including public and private streets.

(r) A written description of the projected phasing of development.

(s) A title block in the lower right hand corner which shall contain name of the subdivision, township, range, section, ¼ section, name of landowner and subdivider, name of surveyor and/or firm who prepared the plat, and space for revisions and dates for each revision.

(t) Location of existing flood-prone hazards on the property and on adjoining properties.

(u) Name and location of abutting subdivisions on the property lines, and ownerships of abutting unplatted property.

(v) If the development is to be phased, preliminary plans demonstrating compliance with Chapter 8. Design Standards and Chapter 9 Required Improvements and other design improvements applicable to that project, proposed or regarded as part of the subdivision, that may be required in the subdivision, must be submitted.

(w) Preliminary plans which provide sufficient information for the County Engineer to review and submit a report and recommendation on the Preliminary Plat.

(x) Mail delivery method including cluster boxes and turn lanes.

(4) After receipt of the Preliminary Plat and any accompanying material, the Land Use Department shall notify the applicant within seven (7) working days if the submittal is complete, and transmit copies to appropriate agencies and officials for their review and comment. At a minimum, copies of the plat will be referred to:

(a) The Big Sandy Conservation District or any federal or state agency which may own land contiguous to that being developed.

(b) The appropriate school district.

(c) County Engineer.

(d) Any municipality within one (1) mile of the proposed subdivision.

(e) Any appropriate special district.

(f) All appropriate state and federal agencies.

(g) County Health Services.

(5) The Big Sandy Conservation District and any municipality within one (1) mile of the proposed subdivision shall return written comments on the Preliminary Plat to the Land Use Department within sixty (60) days after receipt of a Preliminary Plat. The appropriate school district, County Engineer, and any appropriate special district shall return written comments on the Preliminary Plat to the Land Use Department within twenty-one (21) days after receipt of a Preliminary Plat. Failure to comment on the plat within this period shall be construed to indicate approval of the Preliminary Plat.

(6) Upon receipt of all agency comments or at the end of the sixty-day (60) period, the Land Use Department will include the County Engineer's comments, summarize the agency comments including those of the Land Use Department itself, add a written staff recommendation for the approval or disapproval of the

Preliminary Plate, and schedule the matter for discussion at a regular meeting of the Planning and Zoning Commission. After due deliberation, the Planning and Zoning Commission shall either approve or disapprove the Preliminary Plat, and the Land Use Department shall notify the subdivider in writing within seven (7) working days. The Planning and Zoning Commission may attach conditions to its approval. For appeals, see Section 4.e.

(7) Except as provided for phased subdivision projects, the approval of a Preliminary Plat Application shall be effective for a period of one (1) year from the date that the Preliminary Plat is approved by the Planning and Zoning Commission, or by the Board of County Commissioners on a successful appeal of Planning and Zoning Commission denial, at the end of which time the applicant must have submitted a Complete Application for a Final Subdivision Plat for approval.

The Planning and Zoning Commission may initially renew the approved preliminary plat for a one year extension. After the first one year extension the Planning and Zoning Commission may consider two more one year extensions. There shall be no more than three (3) one (1) year extensions. To grant a one year extension the applicant must provide to the Land Use Department the necessary information for the Planning and Zoning Commission to find:

(a) Documentation that all required approving government and agencies and departments concur with the proposed extension;

(b) That all documents that need to be extended have been extended and documentation that the utility companies and public safety providers support the extension;

(c) Evidence that no major preliminary plat amendments are required;

(d) That the plat is still compatible with the surrounding area and is in compliance with current regulations.

For all Preliminary Plat renewals, the applicant shall submit his application for renewal to the Land Use Department at least 45 days prior to consideration in a public hearing at the next regularly scheduled Planning and Zoning Commission meeting. During the public hearing the Planning and Zoning Commission will consider the applicants request. After their review of the application and consideration of public concerns, the Planning and Zoning Commission may approve, approve with conditions, or deny the request for renewing the applicant's preliminary plat. If the Planning and Zoning Commission denies a renewal the applicant may appeal the Planning and Zoning Commission action to the Board of County Commission in accordance to the appeal regulation stated in this Resolution.

If a Final Subdivision Plat is not submitted for approval within the one (1) year period, or the extension period, the Preliminary Plat approval shall be null and void. The applicant shall be required to submit a new application for Sketch Plat approval subject to the then-existing zoning and subdivision regulations.

d. Final Plat.

(1) After approval of a Preliminary Plat, a Final Plat is prepared. The Final Plat shall be prepared and certified as to its accuracy by a land surveyor registered to do such work in the State of Wyoming. The developer shall be notified within seven (7) working days as to the completeness of the submittal. The Final Plat shall conform to the Preliminary Plat and the Design Standards set forth in these regulations and to the approved modifications specified thereon by Sweetwater County.

(2) Final platting may be accomplished in stages covering reasonable portions of the area approved for subdividing in the Preliminary Plat. When this is done, each sheet of the partial Final Plat must contain a Vicinity Map showing the location of the portion being submitted in relationship to the overall tract. Sheets shall have identical titles, legends, and other required information. All partial Final Plats so submitted shall be of the same scale and have match lines shown so that overall mosaics of the entire subdivision can be developed.

(3) The Final Plat shall be clearly and legibly drawn in black, waterproof India ink upon tracing linen, mylar (4 Mil minimum thickness), or some similar stable base material. Required affidavits, certificates, and acknowledgments shall be legibly printed on the plat in opaque ink. The sheet size of all Final Plats shall be 24" high by 36" wide. Information on the plat shall be so positioned that a 1 ½" margin remains on the left side of the sheet and a ½" margin is left on the three remaining sides. The scale of the Final Plat shall not normally be less than 1"=100' so long as all required information is legible. Each sheet of the Final Plat shall be numbered and the total number of sheets comprising the plat shall be stated on each sheet. (For example: Sheet 2 of 4.) The relationship of one sheet to the other shall be shown by key maps and by match lines.

(4) The original linen or mylar and three (3) blue or black line prints of the Final Plat and three (3) copies of all supporting material shall be submitted to the County Land Use Department. The plats shall already contain the necessary signature of the owner or owners, mortgagees, the subdivider, and the land surveyor.

(5) All Final Plats shall include the following information on the face of the plat:

(a) Name of the subdivision.

(b) Location by section, township, range, county, and state.

(c) Square footage of each lot.

(d) North arrow, date, scale.

(e) Legal description of property included within the subdivision based on an accurate traverse giving bearings and linear dimensions that result in a maximum allowable error of closure of 1 in 10,000 for the boundary survey.

(f) The location and the established elevation of the point of beginning and its proper reference to the monumented perimeter survey.

(g) Bearings and distances located outside of the subdivision boundary lines.

(h) On curved boundaries and all curves on the plat sufficient date to allow re-establishment of the curves. At a minimum, this would include the radii, length, and delta for each lot.

(i) The exact location and layout of lots and/or blocks, streets, alleys, easements, and other public grounds within the plat; accurate dimensions in feet and decimals of feet, bearings, length of radii, and/or arcs of all curves together with the names of all streets.

(j) Location and description of all monuments.

(k) A logical system of consecutive numbering for all blocks and lots and all lots and blocks numbered. Tracts should be lettered.

(l) All dimensions and bearings shall be shown on each lot; except that where the dimension and distance of each lot in a series is the same, then only the lot line at each end of the series needs to show the dimension and bearing.

(m) A notation on the total acreage of the subdivision and the total number of lots.

(n) Notarized certificate by all parties having any titled interest in or lien upon the land consenting to the plat and designating public ways, grounds, and easements. The certificate shall read:

CERTIFICATE OF JOINDER

The undersigned, being an (Owner of an Interest (NOTE: Owner of an Interest Must State So) in the Land (Platted or Presently Being Platted) as the (Name of Subdivision), do hereby ratify and join in all provisions of the Certificate of Dedication attached to said Plat as fully and completely as if we had executed the original Certificate of Dedication.

(I/We) do specifically dedicate the use of the (Street), (Easement), (Public Areas) to the General Public.

_____ _____

(Print Name and Title) (Signature)

(Additional Signatures as Needed)

STATE OF WYOMING)

:SS

COUNTY OF SWEETWATER)

The foregoing Certificate was acknowledged before me by (Name(s) this (Date) day of (Month), (Year).

Witness my hand and official seal.

_____

(Notary Public)

My Commission Expires:

_____

(o) Notarized Certificate of Dedication to read as follows:

CERTIFICATE OF DEDICATION

Know all men by these presents that the undersigned, (Official Name of Subdivider) being the sole owner(s) of the land shown on this plat, does hereby certify:

That the foregoing plat designated as (Name of Subdivision or Addition) is located in (Section, Township, Range), Sweetwater County, Wyoming, and is particularly described as follows:

(Insert full legal description)

and contains an area of (number) acres, more or less, and

That this Subdivision as it is described and as it appears on this plat is made with the free consent and in accordance with the desires of the undersigned owner(s) and proprietor(s); and that this is a correct plat of the area as it is divided into lots, blocks, streets, and utility easements, and

That the undersigned owner(s) of the land shown and described on this plat does/do hereby dedicate to the public use all streets, alleys, easements, and other lands within the boundary lines of the plat as indicated and not already otherwise dedicated for public use.

Individuals, where applicable, should add:

All rights under and by virtue of the Homestead Exemption laws of the State of Wyoming are hereby waived and released.

Executed this day of , 20 , by:

_____ _____
(Print Name and Title) (Signature)
(Additional Signatures as Needed)

STATE OF WYOMING)
:SS
COUNTY OF SWEETWATER)

The foregoing instrument was acknowledged before me this day of , 20___, by as a free and voluntary act and deed.

Witness my hand and official seal.

_____
(Notary Public)

My Commission Expires:

_____

(p) Certificate of a registered land surveyor as follows:

I, (Name), do hereby certify that I am a land surveyor registered under the laws of the State of Wyoming, and that this plat is a true, correct, and complete plat of (Name of Subdivision) as laid out, platted, dedicated, and shown hereon that such plat was made from an accurate survey of said property by me and under my supervision and correctly shows the location and dimensions of the lots, easements, and streets of said subdivision as the same are staked upon the ground in compliance with Sweetwater County regulations governing the subdivision of land.

_____
(Registered Land Surveyor)

_____
(Date)

No._____

(q) Certificate of Approval of County Engineer as follows:

Approved this day of , 20 , by the County Engineer of Sweetwater County, Wyoming.

_____
(County Engineer)

(r) Certificate of approval of any incorporated municipality within one (1) mile of the subdivision as follows:

Approved this day of , 20 __, by the governing body of (Name of Town), Sweetwater County, Wyoming.

_____
(Mayor)

_____
(City Clerk)

(s) Certificate of approval by the Sweetwater County Planning and Zoning Commission as follows:

This plat approved by the Sweetwater County Planning and Zoning Commission this ___ day of _____ , 20 ___ .

_____
(Chairman)

(t) Certificate of Acceptance and Approval by the Board of County Commissioners of Sweetwater County as follows:

This plat approved by the Board of County Commissioners of Sweetwater County, Wyoming, this _____ day of , 20 , for filing with the Clerk and Recorder of Sweetwater County, and for conveyance to the County of the public dedications shown hereon, subject to the provision that approval in no way obligates Sweetwater County for financing or

constructing of improvements on lands, streets, or easements dedicated to the public except as specifically agreed to by the Board of County Commissioners, and further that said approval shall in no way obligate Sweetwater County for maintenance of streets which are not dedicated to the public nor until all improvements shall have been completed to the satisfaction of the Board of County Commissioners.

Dated this day of , 20 ___.

_____
(Chairman)

(u) Certificate for recording by County Clerk and Recorder as follows:

This plat was filed for record in the Office of the County Clerk and Recorder at o'clock .m., _____, 20 __, and is duly recorded in Book ___ , Page No. ___.

_____
(Clerk and Recorder)

By_____
(Deputy)

(6) Final Plats shall be accompanied by the following supporting material:

(a) An application for Subdivision Permit form to be provided by the County Land Use Department properly completed.

(b) A Certificate/Memorandum of Title showing ownership and encumbrances shall be submitted. If the applicant is a corporation, a Certificate of Good Standing shall be submitted.

(c) An Affidavit of Publication showing that the applicant has published notice of his intent to apply for a permit published once each week for two (2) weeks within thirty (30) days prior to filing his application. The notice shall include the name of the subdivider, a general location, and a legal description of the land to be subdivided. An application for a Subdivision Permit shall be deemed to have been filed when the Land Use Department is in receipt of the Final Plat and all required supporting material.

(d) Construction Plans and Drawings.

(i) There shall be submitted three (3) sets of complete construction plans to the County Engineer for approval. All plans shall be certified by a professional engineer licensed in the State of Wyoming. One set, when approved, will be returned to the subdivider. Standard 24” x 36” plan and profile sheets drawn at a

scale of 1”=50’ or larger shall be used to show – where applicable – street alignment; street grade existing and proposed; curb location and grade; sanitary sewer size, location, and grade; storm sewer size, location, and grade; water line size and location; mail delivery method including cluster boxes and turn lanes; and utilities location and other similar infrastructure information. Necessary construction details shall be shown and shall conform to the Standard Details and to requirements of the County Engineer with profiles and cross-section drawings of roads, streets, and bridges. Construction specifications shall be submitted along with the plans. Soil profile and test data as determined by a qualified laboratory shall be submitted and shall be used as a basis for paving and gravel base requirements. All Construction Plans and Drawings shall be approved by the County Engineer prior to Final Plat approval.

(ii) Each set of Construction Drawings shall include a cover sheet, a subdivision plat, necessary plan and profile sheets, and standard detail sheets. Each sheet shall have a title block and sheet numbers in the lower right hand corner. The cover sheet shall contain the following certification blocks:

(A) ENGINEEER’S CERTIFICATION BLOCK

I, (Name), do hereby certify that these plans and specifications were prepared by me and under my direct supervision and control.

_____	_____	_____
(Date)	(Engineer’s Name)	(Wyoming P.E. No.)

Approved for construction this ___ day of _____, 20____, by the County Engineer of Sweetwater County, Wyoming.

_____
(County Engineer)

(B) AS-BUILT CERTIFICATION BLOCK

I, (Name), do hereby certify that these plans were prepared under my direct supervision and control, and that they accurately represent the referred to improvements as they have been constructed in the field, and that the improvements to the best of my knowledge conform to the requirements of the Department of Environmental Quality, the State Highway Department, the County Engineer, and any other applicable agencies.

_____	_____	_____
(Date)	(Engineer’s Name)	(Wyoming P.E. No.)

(e) Copies of any private restrictions or covenants affecting the subdivision or any part thereof.

(f) Evidence satisfactory to the Board that the subdivided land is free of all encumbrances, and that the person who offers any part of the subdivision for sale or who solicits any offers for the purchase thereof – directly or through agents – may convey merchantable title subject only to noted reservations or restrictions of record, but free of encumbrances and subject only to a proportionate share of real property taxes or assessments charged or assessed for the year in which any such sale may be legally affected; or that binding arrangements have been made by the person who offers any part of the subdivision for sale – directly or through an agent – to assure purchasers of any part of the subdivision that upon full payment of the purchase price a warranty deed can and will be delivered conveying merchantable title subject only to a proportionate share of such taxes and assessments thereon as may be levied or assessed for the year in which such sale may be legally affected.

(g) Written certification by a professional engineer licensed in the State of Wyoming certifying as to the adequacy and safety of the sewage disposal system proposed for the subdivision including the adequacy of the proposed system in relation to the topography of the subdivision, the proposed population density, soil conditions, and watersheds located on or draining into or over the proposed subdivision. If no public sewage disposal system is proposed by the subdivider, the words "NO PROPOSED PUBLIC SEWAGE DISPOSAL SYSTEM" in bold capital letters shall appear on all offers, solicitations, agreements, advertisements, contracts, plats, and covenants relating to the subdivision.

(h) Sufficient information to assure that the proposed sewage system meets county, state, and federal standards. This information shall include a written opinion on the feasibility of the proposed sewage system from the Wyoming Department of Environmental Quality.

(i) If the subdivider proposes to utilize adjoining property for sewers, drainage, sewer lines, power lines, or other utilities, the subdivider shall provide copies of binding easements of not less than fifteen (15) feet in width for the proposed facilities from each property owner over whose land such services shall extend, and shall provide a minimum access roadway right-of-way of sixty (60) feet to the subdivision for all public ways.

(j) A written certification by a professional engineer licensed in the State of Wyoming certifying to the adequacy and safety of the domestic water source intended to be used for the subdivision and that the plan for

domestic water supply meets county, state, and federal standards. If the water system proposed is to be a public system, a written opinion on the feasibility of the proposed system from the Wyoming Department of Environmental Quality is required. If no domestic water source is proposed by the subdivider, the legend "NO PROPOSED DOMESTIC WATER SOURCE" shall appear on all offers, solicitations, advertisements, agreements, covenants, and plats relating to the subdivision.

(k) The County Fire Warden shall approve the adequacy and the proposed location of any fire hydrants based on a map depicting the proposed location and number of fire hydrants provided by the subdivider.

(l) Evidence satisfactory to the Board that adequate access has been provided; and that all proposed streets, alleys, and roadways within the subdivision conform to the minimum standards adopted by the Board and applied uniformly throughout the county which shall not in itself constitute consent of the Board to locate, repair, or maintain roadways and facilities. If however the subdivider proposes to make any streets, alleys, or roadways private, then the subdivider shall submit to the Board written certification with owner verification that certain streets, alleys, or roadways within the subdivision shall remain private; and then the Board shall be under no obligation to repair, maintain, or accept any dedication of such roads to the public use. If no such public maintenance is contemplated, the subdivider shall put a legend on the plat of the subdivision and on the advertisements for the sale and purchase of lots within the subdivision showing the streets, alleys, and roadways in capital letters "NO PUBLIC MAINTENANCE OF STREETS OR ROADS".

(m) Evidence satisfactory to the Board that the subdivider has adequate financial resources to develop and complete any facility proposed or represented to be the responsibility of the subdivider including, but not limited to, water systems, sewage systems, streets, and roadways. The applicant shall provide a Performance Bond, Irrevocable Letter of Credit, or other sufficient financial commitment to assure that any facilities proposed or represented to be part of the subdivision, in fact, be completed as proposed or escrow sufficient monies out of land sales to guarantee that the above facilities are installed.

(n) A final drainage plan certified by a professional engineer licensed in the State of Wyoming shall be submitted to show the complete drainage scheme including culverts, valley gutters, directional flow of water on streets, swales and drainage easements, and other provisions for handling surface run-off designed for a twenty-five (25) year frequency storm.

(o) Supporting calculations for run-off, times of concentrations, and flow capacity shall also be included. Work shall be certified by a licensed professional engineer registered in the State of Wyoming.

(p) Cross-sections for each water carrier showing high water elevations for a twenty-five (25) year run-off. All work shall be certified by a professional engineer licensed in the State of Wyoming.

(q) Payment for any fees-in-lieu of public dedication.

(r) Where applicable profiles for curb and gutter layout. Work shall be certified by a professional engineer licensed in the State of Wyoming.

(s) Where applicable written approval from the State Highway Department for access.

(t) Where applicable special foundation requirements and/or pavement design certified by a professional engineer licensed in the State of Wyoming.

(u) Corner recordation as per Wyoming State Statutes 36-11-101.

(7) After receipt of the Final Plat and all supporting documents, the County Land Use Department will review the submittal for completeness and for conformance with the approved Preliminary Plat. The Land Use Department may refer copies of the Final Plat to and seek comments from other officials and agencies. Any comments or recommendations shall be noted, and the Final Plat shall be scheduled for consideration at a regular meeting of the Planning and Zoning Commission. After due deliberation, the Planning and Zoning Commission shall approve or disapprove the plat and forward their recommendations to the Board within forty-five (45) days from the date of filing with the Land Use Department. If no action is taken by the Commission within that time, the Plat shall be deemed to be approved by the Commission.

(8) At the same time that the Commission's recommendations are forwarded to the Board, a copy of the Final Plat and the Commission's recommendations shall be sent to any incorporated community within one (1) mile of the location of the plat for action by the governing body of the affected community. Approval by the governing body of the affected community shall be duly noted on the face of the Final Plat which is to be recorded.

(9) Within forty-five (45) days after receiving the recommendations of the Planning and Zoning Commission along with the Final Plat and accompanying materials, the Board shall approve, approve with conditions, or disapprove the Final Plat and the application for a Subdivision Permit.

(10) Upon approval by the Board of the application for a Subdivision Permit the subdivider shall be so notified. Where applicable a Warranty Deed conveying all public lands except streets shall be submitted by the subdivider, and the Subdivision Permit will be issued by the county. The Plat shall be filed by the County Clerk and Recorder among the official records of the County within one hundred and eighty (180) days of the date of the signature. The acknowledgement and recording of such plat is equivalent to a Deed in Fee Simple of such portion of the premises platted as is set aside on the plat for streets or other public use or is dedicated to charitable, religious, or educational purposes.

(e) Replat

A Replat shall be used to alter the lot lines, boundary lines, divide one lot into not more than two lots or combine contiguous lots into one lot and shall only apply to lots within a platted subdivision. Subsequent divisions of lots which have been altered through a Replat shall only be allowed through the minor or major subdivision process. Pursuant to the authority granted by Wyoming Statute 18-5-306(a), the Board has exempted certain requirements of WS 18-5-306 (Minimum Requirements for Subdivision Permits) from the Replat process.

(1) Application Requirements

(a) A Replat application and required fee. Recording fees required by the County Clerk's Office are separate and payable by the applicant.

(b) A plat following the drawing requirements for a Final Plat.

(c) Warranty or Quitclaim Deeds for all lots subject to a Replat. Upon approval, a deed for each lot must be signed and notarized and recorded in the County Clerk's Office.

(d) A Title Report showing ownership and encumbrances.

(e) If the Replat results in the creation of a new lot or results in the combination of lots, the following may be required by the Department:

i. Letters from each utility currently serving the existing subdivision which state that the new lot will be served by the utility and that their facilities are adequate for the lot division.

ii. A prepared and stamped Drainage Plan by a Wyoming Licensed Engineer.

(2) Review Process

The application shall be reviewed for completeness by the Department. Once the Department has considered the application complete, the Department shall post notice of the Replat on the property for a minimum of 14 days. The Department shall also notify and request comments from adjacent property owners, agencies and parties of interest. If reasonable concerns are received and cannot be mitigated, the Department shall schedule public hearings before the Commission and the Board to receive approval of the Replat.

(3) Replat Requirements

A Replat shall meet all requirements of the Subdivision Regulations for a Final Plat drawing and the following:

(a) Lots must front on a public street.

(b) If the Replat results in the creation of a new lot or results in the combination of lots, the following may be required by the Department:

i. Where individual on-lot sewage systems are proposed, a report prepared by a Licensed Engineer shall document the safety and adequacy of the proposed on-lot sewage system and the following words "NO PROPOSED CENTRALIZED SEWAGE SYSTEM," in bold capital letters shall appear on all offers, solicitations, advertisements, contracts, agreements and plats relating to the subdivision. The report must contain the following:

a. Adequacy of separation distances;

b. Separation of drainfield relative to groundwater and impervious soils;

c. Suitability of the subdivision soil conditions;

d. Suitable topography;

e. Proposed population density;

f. Protection of groundwater uses; and

g. Watersheds located on or draining into, under or over the proposed subdivision.

ii. The applicant shall to put a legend on the Replat and on all offers, contracts or agreements for the sale and purchase of lots within the subdivision showing in capital letters "THE SURFACE ESTATE OF THE LAND TO BE SUBDIVIDED IS SUBJECT TO FULL

AND EFFECTIVE DEVELOPMENT OF THE MINERAL ESTATE"

iii. The applicant shall obtain a review and recommendations from the local conservation district regarding soil suitability, erosion control, sedimentation and flooding problems. The review and recommendations shall be completed within sixty (60) days.

iv. The applicant is responsible for the installation of all infrastructure improvements to the lots which serve the original lot at the time Replat application. The Replat shall not be recorded until such improvements are installed unless the applicant provides financial assurance in compliance with the Subdivision Regulations.

v. The title block shall read "Replat of Block ___, Lot ___ of the _____ Subdivision."

vi. Lots shall be identified as Lot __A and Lot __B in sequence with the original Plat or shall be identified by the lowest lot number when combining lots.

vii. A statement to read, "This is a Replat of _____ Subdivision as recorded in the Book of Plats, Page No. _____ in the records of the Sweetwater County Clerk."

(4) Approval

Approval shall be by the Department. Replats so approved shall be filed and recorded in the Office of the Sweetwater County Clerk within 180 days of the date of the Land Use Director's signature. Failure to record the Replat within 180 days shall cause the Replat to become null and void.

Once approved and recorded, the County Clerk will write or cause to be written in plain, legible letters across that part of said original plat so affected by the Replat "Subject of a Replat recorded in Book _____ and Page _____ of the records of the Sweetwater County Clerk."

Section 6. Fees

The following fees are required to be paid at the time the application is submitted. Failure to pay the appropriate fee constitutes an incomplete application.

Application or Requirement	Fee
Sketch Plat	$50
Preliminary Plat	$250
Final Plat	$250
Replat	$150
Variance – Subdivision	$250
Variance – GMP Sec. 7.4 Water & Sewer	$250
Language Amendment	$250

Recording Fee:
Fees for the recordation of documents in the County Clerk's Office are separate and payable by the applicant.

Inspection Fee:
The developer shall pay to the County an inspection fee in an amount not to exceed three (3%) percent of the total final construction cost of the project. Fees collected are for the purpose of partially offsetting costs incurred by the County for inspections of required improvements and shall be credited to the County General Fund.

Section 7. <u>Bond</u>

a. The developer shall furnish to Sweetwater County a Financial Guarantee to cover maintenance and necessary repairs for all streets, drainage improvements, and appurtenant items which will be under jurisdiction of the County. The Financial Guarantee shall be for a period of one year (1) after acceptance of the work by inspection and equal to ten (10%) percent of all estimated public improvements. Such guarantees may be in the form of:

(1) A Cash Escrow Account in a bank approved by the Planning and Zoning Commission.

(2) An Irrevocable Letter of Credit from a bank or other reputable institution or individual subject to the approval of the Planning and Zoning Commission or the Federal Housing Administration.

(3) A Surety Performance Bond from a bonding company authorized to do business in the State of Wyoming.

(4) Or some other form acceptable to the County Attorney.

b. During the duration of the Financial Guarantee written approval from the developer shall be obtained with the mutual concurrence of Sweetwater County prior to any alteration or modification of the streets, drainage improvements, and appurtenant items unless a public emergency arises.

Section 8. Design Standards

a. General Standards

(1) Subdivisions shall comply with the general policy recommendations of the adopted Comprehensive Plan for Sweetwater County, Wyoming.

(2) No subdivision shall be approved which includes features not in conformance with the Sweetwater County Zoning Resolution.

(3) Proper subdivision design shall consider the influence of topography on street patterns, proper drainage, and maintenance of views. Consideration should be given to the preservation of any existing natural vegetation.

(4) Land known subject to flooding shall not be subdivided until the flood threat has been eliminated or until adequate safeguards have been taken against objectionable consequences.

(5) All subdivisions and establishment of roadways within the Growth Management Area after the effective date of said agreement must meet the development and permitting standards and policies of the Growth Management Area Plan and Agreement and the Subdivision Regulations of Sweetwater County. Where the policies and standards of said Growth Management Area Plan and Agreement are different than those standards of the Subdivision Regulations or other official regulations of Sweetwater County the more restrictive standards, regulations or policies shall apply.

b. Provisions for Needed Public Facilities

(1) In any new subdivision platted after the effective date of this Resolution, lands shall be dedicated or fees-in-lieu thereof or a combination of lands or fees-in-lieu thereof shall be paid to Sweetwater County for the purpose of allowing the County to provide open space, parks, recreation, and other public facilities needed to serve the fully developed subdivision.

(2) The amount of land required to be dedicated shall be based on a percentage applied to the net land area of the subdivision, exclusive of proposed streets, for the Zone District in which the subdivision is located as shown in the following table:

ZONE DISTRICT IN WHICH LOCATED		DEDICATION REQUIRMENT
RR-5	Rural Residential (5-acre min. lot size)	1% of net land area
RR	Rural Residential	4% of net land area
R-1	Single-Family	11% of net land area
R-2	Mixed Residential	11% of net land area

R-2/SF	Single-Family Residential	11% of net land area
R-3	Multi-Family	12% of net land area
MH	Mobile Home	9% of net land area

(3) In the event that the application of these standards would result in sits too small to be usable or if the Land Use Department determines that suitable public sites cannot properly be located in the area covered by the Plat, then a payment of a fee-in-lieu of the land dedication shall be required.

(4) The current fair market value shall be set by the County Assessor within twenty-one (21) days of receipt of the Preliminary Plat – see Section 5c.(5) – upon referral from the Land Use Department. The land dedication or fees-in-lieu of shall then be considered concurrent with the Preliminary Plat.

(5) If the subdivider objects to the evaluation amount, he may at his own expense obtain an appraisal of the property by a qualified real estate appraiser approved by Sweetwater County of which appraisal, if found reasonable, may be accepted by the County.

(6) Where private open space for park and recreational purposes is provided in a proposed subdivision, such areas may be credited against the requirement for a land dedication provided that the Board of County Commissioners finds that:

(a) The public interest is adequately served by this arrangement.

(b) Adequate written assurances are submitted that the open space will be developed in a timely fashion for the open space, park, or recreational activity for which the land is intended.

(c) The lone-term preservation of the open space and its maintenance are provided for in a written agreement, a copy of which shall be recorded with the Plat.

(7) Any land dedicated as a requirement of this Section shall be reasonably adaptable to the public use for which it is intended, and shall be at a location convenient to the people to be served. Land dedicated to the public as a requirement of this Section shall be conveyed to Sweetwater County by Warranty Deed or other instrument acceptable to the Sweetwater County Planning and Zoning Commission and the Sweetwater County Board of Commissioners.

(8) No land dedication or fees-in-lieu of land shall be required for subdivisions where the intended use is for commercial or industrial purposes.

c. Roads, Streets, and Alleys.

(1) The arrangement of major roads and streets shall conform to the Sweetwater County Highway Plan as it shall from time to time be determined. Streets and roads in a subdivision shall connect with streets of the same class already dedicated in adjoining or adjacent subdivisions unless waived by the County Commissioners.

(2) Minor residential streets shall be planned to discourage through traffic within a subdivision. Permitted cul-de-sacs shall not be longer than five hundred (500) feet to the center of the turn around, and shall terminate with a turn around having a curb line radius of not less than forty (40) feet and a right-of-way radius of not less than fifty (50) feet. Standard details for cul-de-sacs are shown in Figure I.

(3) Centerline offsets of intersecting streets shall be avoided. However if offsets are necessary because of lot and block layout or other valid reasons, then the distance between centerlines of intersecting streets shall be not less than one hundred and fifty (150) feet as shown in Figure II.

(4) Half streets shall be prohibited except where essential to the reasonable development of the subdivision or where it is found to be practical to require the dedication of the other half when adjoining property is divided.

(5) Under normal conditions streets shall be laid out so as to intersect as nearly as possible at right angles except where topography or other conditions justify variations. More than four (4) approaches to any intersection shall be prohibited.

(6) Alleys shall be provided in commercial and industrial districts except where other definite and assured provision is made for service access. Alleys may be required in residential districts.

(7) The right-of-way widths and roadway widths for dedicated roads, streets, and alleys included in any subdivision shall not be less than the minimum dimensions for each classification as follows:

CLASSIFICATION	*ROADWAY WIDTH	RIGHT-OF-WAY
Major Street & Highways	44 feet	100 feet
Collector Streets	42 feet	80 feet
Local Streets (Commercial, Industrial, & Multi-Family Residential)	38 feet	60 feet
Local Streets (Low Density Residential)	30 feet	50 feet

Alleys (Where Required)	20 feet	20 feet

*Roadway width is the distance between the outside of curb backs or the width of gravel surfacing.

Major streets and highways and collector streets shall normally be extensions of existing major streets, highways, and collector streets or shall be in locations designated by the Planning and Zoning Commission.

(8) Where the deflection angle in the alignment of a street is more than ten (10) degrees, the minimum centerline radius of curves shall be as follows:

CLASSIFICATION	RADIUS
Major Street	600 feet
Collector Street	400 feet
Local Street	200 feet

The curve radius shall in any case assure adequate sight distance which is dependent upon type of street, speed of travel, and other controlling conditions.

(9) The following minimum radii will apply at street intersections for property lines and curbs:

CLASSIFICATION	PROPERTY LINE RADIUS	CURB RADIUS
Local Street to Local Street	20 feet	20 feet
Local Street to Collector Street	20 feet	30 feet
Collector Street to Collector Street	20 feet	30 feet
Collector Street to Major Street	20 feet	40 feet
Major Street to Major Street	20 feet	50 feet

Figures III, IV, V, VI, and VII show standard details for the various combinations of street intersections.

(10) In general the street system will be adapted to the topography of the area as far as practicable. Street grades should permit proper drainage without excessive excavation and grading work. Gradients shall not be too steep for easy passage of

vehicular traffic particularly under conditions of snow and ice. Because of highly variable topographic conditions which may prevail, the grade requirements in each case shall be largely governed by the judgment of the County Engineer and the Land Use Department staff. In general the maximum allowable grade shall not exceed ten (10%) percent. And the minimum grade shall not be less than one-half of one percent (0.5%). In no case shall the slope of road exceed three (3%) percent within one hundred (100) feet of an intersection.

(11) Vertical curves shall be used at all points where grade changes exceed one (1%) percent, and shall in each case be designed to permit the required sight distance in accordance with the current specification of the American Association of State Highway Officials.

(12) Culverts shall be installed at street intersections and driveways where cross drainage is necessary. Culvert sizes shall be adequate to accommodate a 25-year frequency storm run-off on local streets and a 50-year frequency storm run-off on collector and major streets. However in no case shall they be less than eighteen (18) inches in diameter or an equivalent pipe arch cross-sectional area. A minimum cover of twelve (12) inches shall be maintained over all culverts.

(13) Platting should be accomplished so that local streets and driveways do not access directly onto major streets.

(14) Street names shall not duplicate existing street names unless the street in question is an extension of an existing street. All street names shall be subject to approval by the Board of County Commissioners. The system for roadway designations is illustrated in Figure XXIII.

(15) Street signs shall be placed at all intersections. Two signs are required at diagonally opposite corners and on the right hand side to approaching traffic. All signs shall be double-faced to be read from both directions.

Sign construction shall be in accordance with standard design as shown on Figure XXI and XXII.

(16) Road and street design requirements will vary to some extent depending upon prevailing conditions at the site. In general, specifications for materials and construction work shall conform to applicable sections of the latest edition of the Wyoming Highway Department's "Specifications for Road Construction". Compliance shall be verified by review and approval of the County Engineer.

d. Lots and Blocks

(1) Blocks in residential subdivisions shall be not less than five hundred (500) feet long and not more than one thousand two hundred (1,200) feet long except as

allowed by the Commission or the Board, except in the RR-5 (minimum lot size of five acres) zone district. In the RR-5 zone district the blocks in residential subdivisions shall be not less than five hundred (500) feet long and not more than one thousand five hundred (1,500) feet long except as allowed by the Commission or the Board.

(2) Side lot lines shall be at right angles to straight street lines or radial to curved street lines.

(3) Every lot shall abut and have access to a public or private street or road.

(4) Double frontage lots shall be avoided except where they back upon a major street. Where double frontage lots are permitted, access to those lots from the major street shall be prohibited.

(5) Size and dimensions of lots shall be no less than that specified by the Zoning Resolution of Sweetwater County, Wyoming. The depth to front ratio of lots shall be less than 2.5 to 1.

(6) Corner lots for residential use shall have extra width to allow proper setback from both streets.

(7) Easements where necessary for utilities, water, or sanitary sewer shall be provided and shall be at least fifteen (15) feet wide. Where utility lines are located within street or roadway rights-of-way or through other public areas within the subdivision, the developer shall obtain the necessary easements. Maps shall be submitted showing the actual location of said line or other improvement.

e. Fire Protection

(1) Subdivisions served by a public water system shall provide fire hydrants at intervals of no more than five hundred (500) feet within public rights-of-way. If the water system is under the jurisdiction of Political Subdivision of the State of Wyoming, the design and installation of water mains and associated appurtenances shall meet or exceed the standards of this Political Subdivision. Otherwise the following requirements shall be met:

(a) Hydrants shall have a minimum fire flow of five hundred (500) gallons per minute (g.p.m.) with a residual pressure of twenty (20) pounds per square inch.

(b) In the setting of these required fire hydrants the connection between a water main and the hydrants shall not be less than six (6) inches in diameter. A gate valve shall also be installed in the area.

(c) The fire hydrants shall be a dry barrel type with two and one-half (2 ½) inch outlets and one four and one-half (4 ½) inch outlet facing the roadway with National standard threads and left hand opening turning counter-clockwise.

(d) The fire hydrants are to be set plumb with the bottom of the lowest outlet eighteen (18) inches above finished grade or so the safety flange bolts or collar are above finished grade.

(e) For drainage considerations these frost-proof fire hydrants shall have a space of two (2) feet in diameter and two (2) feet below the base of the hydrant filled with coarse gravel or stones placed around the bowl of the hydrant to a level of six (6) inches above the waste opening of each fire hydrant. Further, the drain valve of each fire hydrant shall be set free of dirt, and the cement thrust block shall be in place so as to not block the drain hole of each fire hydrant.

f. Drainage

(1) Lots shall be designed and graded in a manner that slope away from buildings shall be no less than 6" within 10 feet of buildings. (Resolution 08-07-CC-02)

(2) Gradients for open drain ditches shall be designated for velocities that will not permit erosion. Paved gutters will be required where velocities exceed those likely to cause destructive erosion.

(3) Easements, where necessary for drainage ditches, shall be provided and shall be at least fifteen (15) feet wide. Deed restrictions or covenants shall be established to prohibit individual lot owners from altering or obstructing drainage ways.

Section 9. Improvements

a. Assurances

(1) The subdivider shall submit with the Final Plat guarantee to insure the necessary and required improvements are to be accomplished by the subdivider in a timely manner. Such guarantees may be in the form of:

(a) A Surety Performance Bond from a bonding company authorized to do business in the Sate of Wyoming.

(b) An Escrow Account in a bank approved by the Planning and Zoning Commission.

(c) An Irrevocable Letter of Credit from a bank or other reputable institution or individual subject to the approval of the Planning and Zoning Commission or Federal Housing Administration.

(2) The amount of any such financial instrument shall be one hundred and twenty-five (125%) percent of the estimated cost, as estimated by the subdivider and approved by the County Engineer, of installing all required improvements. The estimated cost of improvements shall be submitted along with the construction plans. The estimate shall be itemized to show the amount for each part of the work.

(3) Agreements covering the amount, purpose, and use of the funds guaranteed by the financial instruments enumerated in Section 9.a. (1) above shall be in writing and a copy filed with the Planning Department. Such an agreement shall, at a minimum:

(a) State the duration of the Performance Bond, Escrow Account, or Irrevocable Letter of Credit.

(b) Provide for funds to be made payable to Sweetwater County in the case of failure without just cause on the part of the subdivider to complete the specified improvements within the required time period.

(c) Provide that the agreement cannot be withdrawn or reduced in amount until released by the Board of County Commissioners. The Board of County Commissioners cannot approve release of financial security until letters of approval and acceptance have been received by the Board from all authorizing departments, agencies, and other governing bodies. (Resolution 08-07-CC-02)

(d) Be approved by the County Attorney for legal sufficiency.

(4) During the construction period no major changes may be made without first obtaining written approval of the County Engineer.

b. Required Improvements

(1) The subdivider shall install the following improvements in a timely manner and in accordance with plans, date, and specifications as approved by the County Engineer:

(a) A description of all monuments both found and set which mark the boundary of the subdivision and ties by bearings and distances to the nearest accepted control monuments used in conducting the survey. All monumentation shall conform to the "Guidelines for the Professional Practice of Land Surveying" currently adopted by the Wyoming Association of Consulting Engineers and Surveyors.

(b) All section corners and quarter corners which have been destroyed shall be either replaced or offset where necessary.

(c) Grading, drainage, and drainage structure necessary to the proper use, safety, and drainage of streets and highways and areas within the subdivision.

(d) Road improvements including surface, base, and typical cross-section as approved by the County Engineer.

(e) Sidewalks where required shall be not less than four (4) feet wide on local streets nor less than five (5) feet wide on collector and arterial streets as shown in Figure XX.

(f) Water mains and fire hydrants shall be of a size, type, and at a location designated by any Political Subdivision of the State of Wyoming having jurisdiction over the water system used to service the proposed subdivision, if any, and approved by the County Engineer and the County Fire Warden with provisions for maintenance of the system.

(g) Street name signs at all street intersections.

(h) Where sanitary sewer of an existing community is accessible by gravity flow within one-half mile from the area platted, the subdivider shall connect to the existing sewer system and provide adequate sewer lines and stubs to each lot in a manner which will avoid the necessity for distributing the street pavement, gutter, culvert, or curb when final connections are made.

(i) If a public sewage system of an existing community or an existing sewer district is not available, an on-lot sewage disposal system shall be provided prior to occupancy of buildings thereon. Soil percolation tests shall be performed or supervised by a registered engineer or qualified sanitarian to be reviewed by the County Sanitarian to determine suitability for on-lot disposal systems. At a minimum percolation rates shall not exceed sixty (60) minutes for one (1) inch. Lots with an on-lot system shall not be less than one (1) acre in size.

(j) Where a public sanitary sewer accessible by gravity connection is not within five hundred (500) feet of the Final Plat, but where plans for the installation of public sanitary sewers within such proximity to the plat have been prepared and construction will commence within twelve (12) months from the date of approval of the plat, the subdivider shall be required to install sewers in conformity with such plans.

(k) Where a public water supply is within one-half mile of a proposed subdivision, the subdivider shall install or have installed a connection to each lot prior to the paving of the street if possible. Where a public water supply is not available, each lot in a subdivision shall be furnished with a water supply system with proper provisions for the testing and maintenance thereof. Any lot so serviced shall have a minimum area of one (1) acre. Such water systems shall be subject to the written approval of the County Sanitarian. Such approval shall be granted upon the submission of a detailed construction drawing and compliance wit the "Minimum Standards for Private and Semi-Private Water Supplies" as published by the Wyoming Division of Health and Social Services.

(l) Fire fighting equipment of a type and at locations designated by the County Fire Warden. This requirement for fire fighting equipment may be assumed by the creation of a statutory fire district or by the creation of a homeowner's association.

c. Inspections

(1) Periodic inspections of all road and street construction work will be the responsibility of the County Engineer. Inspections shall be made throughout all stages of the job. Any deficiencies revealed by such inspections shall be corrected as directed by the County Engineer. The subdivider shall give advance notice to the County Engineer when construction work will begin. The developer shall notify the County Engineer at least two (2) working days prior to the beginning or continuance of all grading, drainage, and other improvement work.

(2) A request for a final inspection shall be made in writing to the County Engineer's Office at least three (3) days prior to the final inspection. The owner and/or his representative shall be present during the final inspection.

d. Construction Standards and Testing

(1) All tests of construction materials shall be made in accordance with the current issue of the "Wyoming Public Work Standard Specifications" or the Wyoming Highway Department's "Specifications for Road and Bridge Construction". Test results for aggregate, cement, asphalt, and other construction materials shall be submitted to the County Engineer for review and approval prior to beginning work on the project.

(2) All testing of each phase of construction shall be made in accordance with the current issue of the "Wyoming Public Work Standard Specifications" or the Wyoming Highway Department's "Specifications for Road and Bridge Construction". Construction testing shall be conducted as required throughout all phases of construction to include compaction tests, soil analysis, drilling logs, and other investigative work which may be required by the County Engineer.

(a) The number of compaction tests for embankment shall be performed at varying depths using the following table for each two (2) feet of depth of compacted fill placed:

(i) Length of Road (in feet)

TABLE

0-500.1	Minimum 3 tests
501-1000	Minimum 5 tests
1001-5000	1 test every 250 LF
5001-up	1 test every 350 LF

(ii) In the case of a failed test that area must be re-worked and re-tested along with a new test one hundred (100) feet along the road each way from the failed test. This procedure must be used until all tests pass.

Testing to be performed at regular intervals and locations, e.g. left edge of road, centerline, and right edge of road.

(iii) Compaction Test

MATERIAL	TEST REQUIRED-STANDARD PROCTOR
Sub-base	95% compaction – SEE TABLE
Base Course	95% compaction – SEE TABLE

Asphalt 95% compaction–1 test/200 L.F.

(b) Gravel and Aggregate Graduation Analysis

Base Course	1 test/2,000 c.y. installed
Asphalt Aggregate & Bitumen Content	1 test/8,000 s.y. installed

Minimum of one test per stockpile or per 2,000 tons, whichever results in the greater number of test.

(3) Concrete work for curb and gutter, drainage structures, and other items that may be a part of the road and street construction shall be done in accordance with Wyoming Highway Department Specifications. Both materials and workmanship shall be inspected and checked for conformance. Standard details for curb and gutter design are shown in Figures XVII, XVIII, and XIX. The choice of the type to be used shall be based on the controlling conditions of the site and as approved by the County Engineer.

(4) Final acceptance of the project will not be made until all necessary field tests are submitted to the County Engineer along with all corrections for failing test. Test results must be submitted to the County Engineer on a weekly basis during the progress of the work.

e. As-Built Plans

(1) Prior to the approval and acceptance of any completed improvements, as-built plans must be submitted to the County Engineer. The plans submitted shall be on a 24”x36” reproducible mylar.

f. Acceptance of Subdivision Improvements

Acceptance of subdivision improvements shall be in two (2) parts: initial acceptance of the construction work and a final acceptance of the subdivision improvements by Sweetwater County.

(1) Initial acceptance of the construction work by Sweetwater County will be made by letter from the County Engineer to the subdivider upon completion of the following:

(a) Submittal to the County in a timely fashion of all test results with the test locations and re-tests and any other required engineering tests.

(b) All items noted in inspections made during construction have been corrected and a final construction inspection has been made with the subdivider, his contractor, and his engineer.

(2) Final acceptance of the subdivision improvements and acceptance of maintenance of the roadway by Sweetwater County will be by Resolution upon completion of the following:

(a) Correction of any deficiencies noted in the one-year maintenance period by the subdivider.

(b) Completion of the one-year maintenance time period based on the date of the letter of initial acceptance of construction work.

(c) Acceptance by the Sweetwater County Board of Commissioners of the improvements.

(d) All sections of the Subdivision Improvements Agreement have been complied with by all parties involved.

Section 10. Grading Permit Regulations

a. Purpose and Intent

The purpose of this section is to protect the health, safety and welfare of the property owners by setting forth necessary requirements for grading. Grading may adversely affect adjacent properties in regards to drainage, dust, etc. The provisions of this Section shall apply to grading, excavation and earthwork construction, including fills and embankments.

b. Permit Required

Except as exempted in section 1.9, no grading shall be performed without first having obtained a Grading Permit. Grading is defined as an excavation or fill or a combination of both. Excavation is defined as removal of earth material by artificial means, also referred to as a cut. Regardless of action by the County, authorization from the Wyoming Department of Environmental Quality may be required. A Grading Permit is not intended to circumvent the Subdivision Regulations for a project that is intended to be subdivided. A Grading Permit is not intended for the physical layout for a subdivision or a roadway. Final approval for a Grading Permit is by the Sweetwater County Engineer. Additionally, the applicant shall be responsible for having his application reviewed by applicable utilities. Furthermore, the applicant shall submit letters of approval from all applicable utilities, if any.

c. Grading Plan

A Grading Plan, prepared and stamped by a Wyoming Licensed Professional Engineer, shall be submitted with the application for a Grading Permit. A grading plan shall be a scaled drawing, showing dimensions for the property that is the subject of the permit application, and shall show the existing grade and finished grade in contour intervals of sufficient clarity to indicate the nature and extent of the work on the subject property. The grading plans shall include the following statement on the face of the plan; *"If this grading plan is properly implemented, drainage from this property will not adversely affect adjacent property owners"*.

d. Dust Control

A Dust Control Plan must be submitted with the Grading Permit Application. Reasonable efforts, that are consistent with the dust control plan and acceptable to Sweetwater County, must be made to control blowing dust during the actual grading of the site and when the grading has been completed.

e. Maximum slope

The slope of cut surfaces shall be no steeper than is safe for intended use, and no steeper than 2 horizontal to 1 vertical, unless the applicant furnishes a soils report justifying a steeper slope.

f. Erosion

The faces of cut and fill slopes shall be prepared and maintained to control erosion. Where necessary, check dams, cribbing, riprap or other devices or methods shall be employed to control erosion and provide safety. Revegetation, if required by local, state, or federal government entities, must be completed.

g. Fills

The ground surface shall be prepared to receive fill by removing vegetation, topsoil and other unsuitable materials, and scarifying the ground to provide a bond with the fill material. Fills shall be compacted to appropriate engineering standards. Fill material shall not include organic, frozen, or deleterious material.

h. Drainage

Swales or drainage ditches shall be provided as necessary to provide for safe and adequate removal of surface runoff. Drainage across property lines shall not exceed that which existed prior to grading. Excess or concentrated drainage shall be contained on-site or directed to an approved drainage facility. Erosion of the ground in the area of the discharge shall be prevented by installation of non-erosive down drains or other devices.

i. Exemptions

A Grading Permit shall not be required for the following:

(a) Agricultural production.

(b) Excavation for construction of a structure when a Construction Use Permit has been issued by the Planning Department.

(c) Excavation for work associated with an approved Subdivision, Development Plan or Master Planned Development.

(d) Refuse disposal sites controlled by other regulations.

(e) Excavation for wells, or trenches for utilities, except where these are a part of or included in a proposed Subdivision, Development Plan, or Master Planned

Development.

(f) Mining, quarrying, excavating, processing or stockpiling: rock, sand, gravel, aggregate or clay controlled by other regulations, provided such operations do not affect the lateral support of, or significantly increase stresses in, soil on adjoining properties.

(g) Oil and gas drilling.

(h) Excavation associated with landscaping improvements.

(i) Exploratory excavations performed under the direction of a registered design professional.

(j) Cemetery grave.

Section 11. Severability

Should any section or provision of these regulations be declared by the courts to be unconstitutional or invalid, such declaration shall not affect the validity of the regulations as a whole or any part thereof other than the part so declared to be unconstitutional or invalid.

Section 12. Legal Status of Regulations

a. Conflict with Other Regulations and Agreements

(1) No Final Plat of land subject to the Zoning Resolution shall be approved unless it also conforms to that regulation. Whenever there is a discrepancy between minimum standards or dimensions noted herein and those contained in the Zoning Resolution, building code, or other official regulations, the most restrictive shall apply.

(2) No restrictive covenants or other agreements between private parties shall appear on the face of any plat. Where such covenants or agreements exist they shall be subordinate to the County regulatory authority, and Sweetwater County shall have no obligations to enforce the provisions of such covenants or agreements.

Section 13. Amendments

The Board of County Commissioners may amend these regulations as appropriate from time to time. All amendments shall be submitted to the Sweetwater County Planning and Zoning Commission for their review and recommendation. Any amendment to this Resolution shall be accomplished by the official action of the Board of County Commissioners after a public hearing held in accordance with the statutes of the State of Wyoming.

Section 14. Definitions

For the purpose of interpreting these regulations the following words and terms are defined. Words used in the present tense shall include the future tense, and words used in the singular shall include the plural. The work "shall" when used in these regulations is mandatory. The word "should" is directory and not mandatory, and the word "may" is permissive.

a. **AFFIDAVIT OF CORRECTION:** Corrects errors on accompanying documents and/or language in a recorded subdivision.

b. **AGRICULTURAL PURPOSES:** The use of land including farming, dairying, pasturage, horticulture, animal and poultry husbandry, silvaculture, and the necessary ancillary uses. Ancillary uses shall be secondary to that of the normal agricultural activities. A use shall be classified as agricultural only if agriculture is the principle or main use of the land.

c. **ALLEY**: A public right-of-way which is used primarily as a secondary means of access to the abutting property.

d. **BLOCK**: A tract or parcel of land bounded by public streets or lands, streams, railroads, unplatted lands, or the boundaries of the subdivision.

e. **BOARD**: The Board of County Commissioners of Sweetwater County.

f. **COMMISSION**: The duly appointed Planning and Zoning Commission of Sweetwater County.

g. **COUNTY**: Sweetwater County, Wyoming.

h. **COUNTY ENGINEER**: The County Engineer, surveyor, or any duly registered, licensed engineer or land surveyor under Wyoming State Statutes who is retained by the County.

i. **COUNTY HEALTH SERVICES**: The Health Officer and professional staff of the Sweetwater County Health Services Office.

j. **CUL-DE-SAC**: A street having one end connecting with a public street and being terminated at its other end by a vehicular turn-around.

k. **EASEMENT**: A designated area on a parcel of land which the owner may set aside for the use of others, typically public utilities.

l. **ENCUMBRANCE**: A mortgage or other lien of record securing or evidencing indebtedness and affecting land to be subdivided including liens for labor and materials.

Taxes and assessments levied by public authority are not an encumbrance except such taxes and assessments as may be delinquent.

m. **FINAL PLAT:** The map of a subdivision which conforms to the Preliminary Plat to be recorded after approval by the Planning and Zoning Commission and Board of County Commissioners and any accompanying materials as required by these regulations.

n. **IMPROVEMENTS**: Pavements, curbs, gutters, sidewalks, water mains, sanitary sewers, storm sewers, grading, street signs, plantings, and other items for the welfare of the property owners and the public.

o. **LAND USE DEPARTMENT**: The Land Use Director, the Land Use staff, and the Planning and Zoning Commission of Sweetwater County, Wyoming.

p. **LAND USE OFFICE**: The Land Use Director and the professional staff of the Sweetwater County Land Use Department.

q. **LOT**: A numbered or otherwise described tract of land separated from other tracts for the purpose of development or for the transfer of ownership, exclusive of public rights-of-way or private road easements.

r. **MAJOR SUBDIVISION:** All subdivisions not classified as minor subdivisions, including, but not limited to subdivisions of four (4) or more lots, or any size subdivision requiring any new public or private street or any extension thereto, drainage, utilities, or any extension of the local government facilities or the creation of public improvements.

s. **MINOR SUBDIVISION:** A division of a lot, tract, parcel, or other unit of land into not more than four (4) lots, plots, units, sites, or other subdivision of land for the immediate or future purpose of sale, building development or re-development for residential, recreational, industrial, commercial, or public uses which occurred after March 10, 1975. A Minor Subdivision shall not include the installation of subdivision improvements or infrastructure. NOTE: This is the date the State of Wyoming passed the subdivision law. The word "subdivide" or any derivative thereof shall have reference to the term.

t. **ON-SITE SEPTIC SYSTEM**: Any sewerage treatment other than a community, district, or municipality owned system.

u. **PERSON**: A natural person, firm, corporation, partnership or association, or any combination of the above, or any other legal or commercial entity.

v. **PLAT**: A map, drawing, or chart on which the subdivider's plan of the subdivision is presented, and which he submits for approval and eventual recording in final form.

w. **PRELIMINARY PLAT:** The preliminary drawings and preliminary plans and other supporting documents as described in these regulations, indicating the proposed manner

or layout of the subdivision to be submitted to the Planning and Zoning Commission for approval.

x. **PUBLIC WATER SYSTEM**: Any water supply being distributed by twenty or more service connections utilized to furnish water for human consumption either in preparing foods or beverages for inhabitants or residences or business establishments.

y. **REPLAT**: A subdivision which changes any public or private right-of-way or lot lines in a recorded subdivision.

z. **RIGHT-OF-WAY**: A strip of land dedicated for public use.

aa. **SELL**: Includes sale, contract to sell, lease, assignment, auction, award by lottery, or any offer or solicitation of any offer to do any of the foregoing concerning a subdivision or any part of a subdivision.

bb. **SKETCH PHASING PLAN:** A Sketch Phasing Plan is part of the requirements of the Sketch Plat for a subdivision which includes phasing. A schematic plan showing all contiguous property owned by the applicant and shows how the applicant plans to make provisions for public and private infrastructure for the area to be developed, including adequate access, circulation, utilities and public and private accesses and traffic circulation within all phases of a subdivision and any connections with surrounding property. The schematic plan shall also show the planned installation of utilities, fire protection, drainage, and roadways. The proposed boundary lines of each phase shall be shown and an estimated time table for development of each phase must be provided on the Sketch Phasing Plan. In a Phased Subdivision, a Sketch, Preliminary, and Final Plat must be submitted.

cc. **SKETCH PLAT:** The sketch drawings and plans preparatory to the preliminary plat (or final plat in the case of minor subdivisions) to enable the subdivider to save time and expense in reaching general agreement with the Land Use Department as to the form and layout of the subdivision, and to reach general agreement as to the initial form of the plat, including schematic drawings including drainage, easements, roads, and utilities, and the objectives of these regulations.

dd. **STREET, COLLECTOR**: A street which connects traffic from local neighborhood streets and carries it to a major street or highway.

ee. **STREET, LOCAL**: A street which affords primary access to private property and is only continuous for short distances in the area where it originates.

ff. **STREET, MAJOR**: A street of considerable continuity and traffic carrying capacity connecting various parts of the County.

gg. **SUBDIVIDER**: Means any person who lays out any subdivision or parts thereof either for the account of the subdivider or others.

hh. **SUBDIVISION**: Means a division of a lot, tract, parcel, or other unit of land for the immediate or future purpose of sale, building development or re-development for residential, recreational, industrial, commercial, or public uses. The word "subdivide" or any derivate thereof shall have reference to the term "subdivision" including mobile home courts, the creation of which constitutes a subdivision of land.

ii. **ZONING RESOLUTION**: The duly adopted Zoning Resolution in effect in Sweetwater County.

APPENDIX A

Standard of Details

Figure I	Cul-De-Sacs
Figure II	Street Intersections
Figure III	Major Street to Major Street
Figure IV	Collector Street to Major Street
Figure V	Collector Street to Collector Street
Figure VI	Local Street to Collector Street
Figure VII	Local Street to Local Street
Figure VIII	Major Collector Streets (Paved Surface)
Figure IX	Major Collector Streets (Gravel Surface - 100 ft R.O.W.)
Figure X	Minor Collector Streets (Paved Surface - 80 ft. R.O.W.)
Figure XI	Minor Collector Streets (Gravel Surface - 80 ft R.O.W.)
Figure XII	Local Streets (Paved Surface – 80 ft R.O.W.)
Figure XIII	Local Streets (Gravel Surface – 80 ft R.O.W.)
Figure XIV	Local Streets (Paved Surface – 70 ft. R.O.W.)
Figure XV	Local Streets (Gravel Surface – 60 ft. R.O.W.)
Figure XVI	Minor Streets (Paved Surface – 60 ft. R.O.W.)
Figure XVII	Minor Local Streets (Gravel Surface – 60 ft. R.O.W.)
Figure XVIII	Rural Local Streets (Paved Surface – 60 ft. R.O.W.)
Figure XIX	"L" Type Curb & Gutter
Figure XX	Roll Type Curb & Gutter
Figure XXI	36" Valley Gutter
Figure XXII	5 ft. Wide Sidewalk
Figure XXIII	Street Signs
Figure XXIV	Stop & Yield Signs
Figure XXV	Roadway Designation System

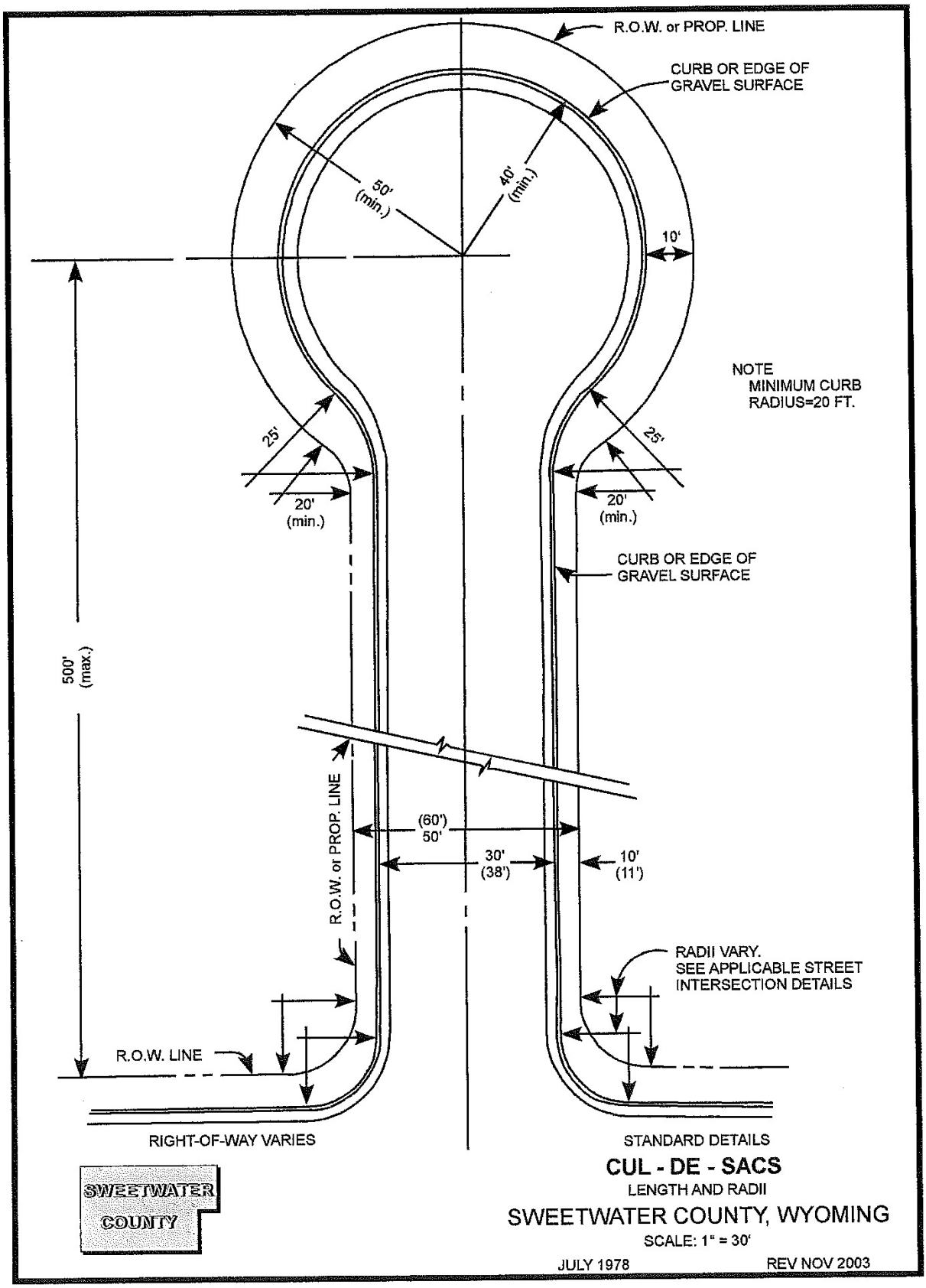
R.O.W. or PROP. LINE
CURB OR EDGE OF GRAVEL SURFACE
50' (min.)
40' (min.)
10'
NOTE
MINIMUM CURB RADIUS=20 FT.
25'
25'
20' (min.)
20' (min.)
CURB OR EDGE OF GRAVEL SURFACE
500' (max.)
R.O.W. or PROP. LINE
(60') 50'
30' (38')
10' (11')
RADII VARY. SEE APPLICABLE STREET INTERSECTION DETAILS
R.O.W. LINE
RIGHT-OF-WAY VARIES
STANDARD DETAILS
CUL - DE - SACS
LENGTH AND RADII
SWEETWATER COUNTY, WYOMING
SCALE: 1" = 30'
JULY 1978
REV NOV 2003
SWEETWATER COUNTY

FIGURE I

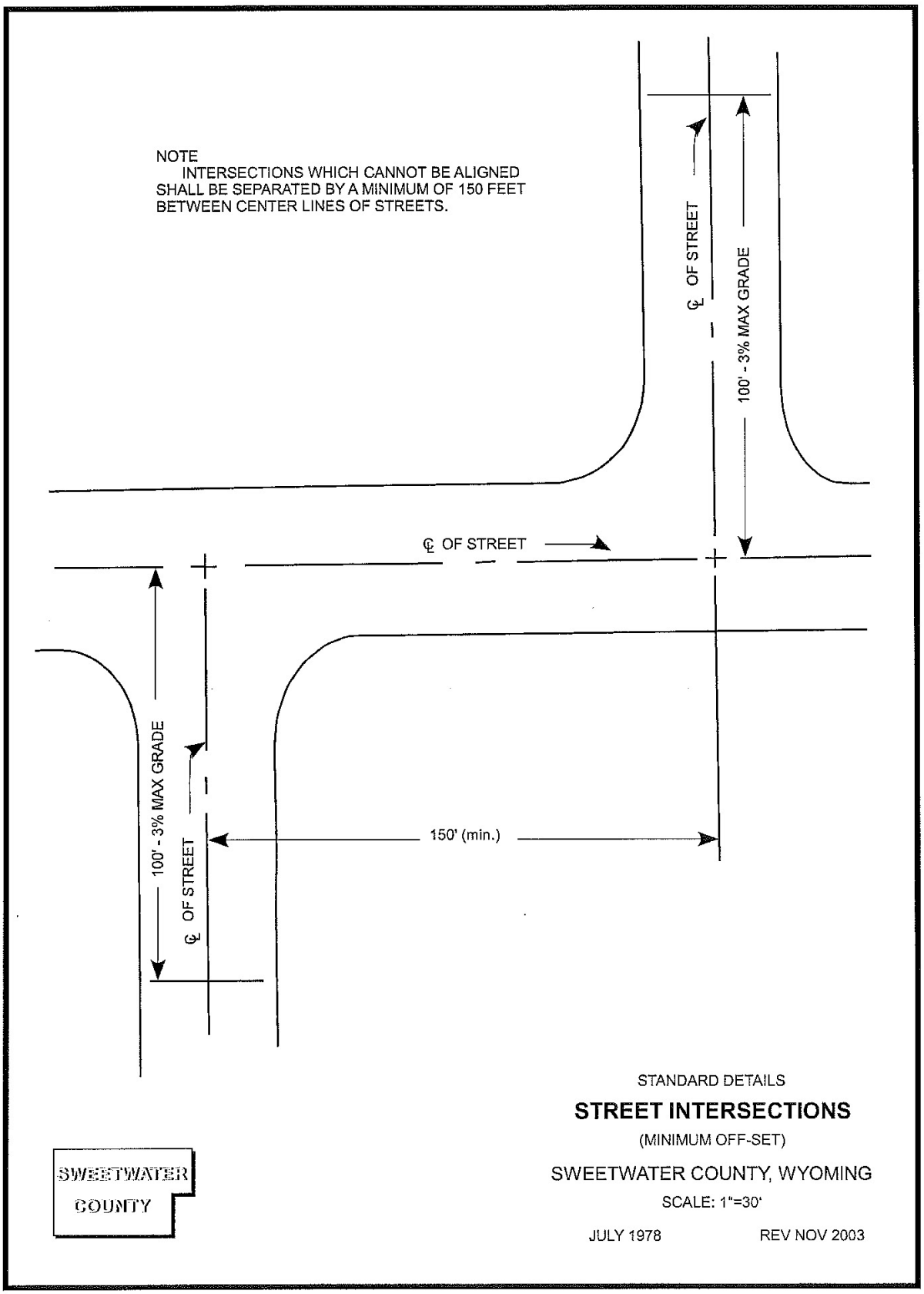
NOTE
INTERSECTIONS WHICH CANNOT BE ALIGNED SHALL BE SEPARATED BY A MINIMUM OF 150 FEET BETWEEN CENTER LINES OF STREETS.
℄ OF STREET
100' - 3% MAX GRADE
℄ OF STREET
100' - 3% MAX GRADE
℄ OF STREET
150' (min.)
STANDARD DETAILS
STREET INTERSECTIONS
(MINIMUM OFF-SET)
SWEETWATER COUNTY, WYOMING
SCALE: 1"=30'
JULY 1978
REV NOV 2003
SWEETWATER COUNTY

FIGURE II

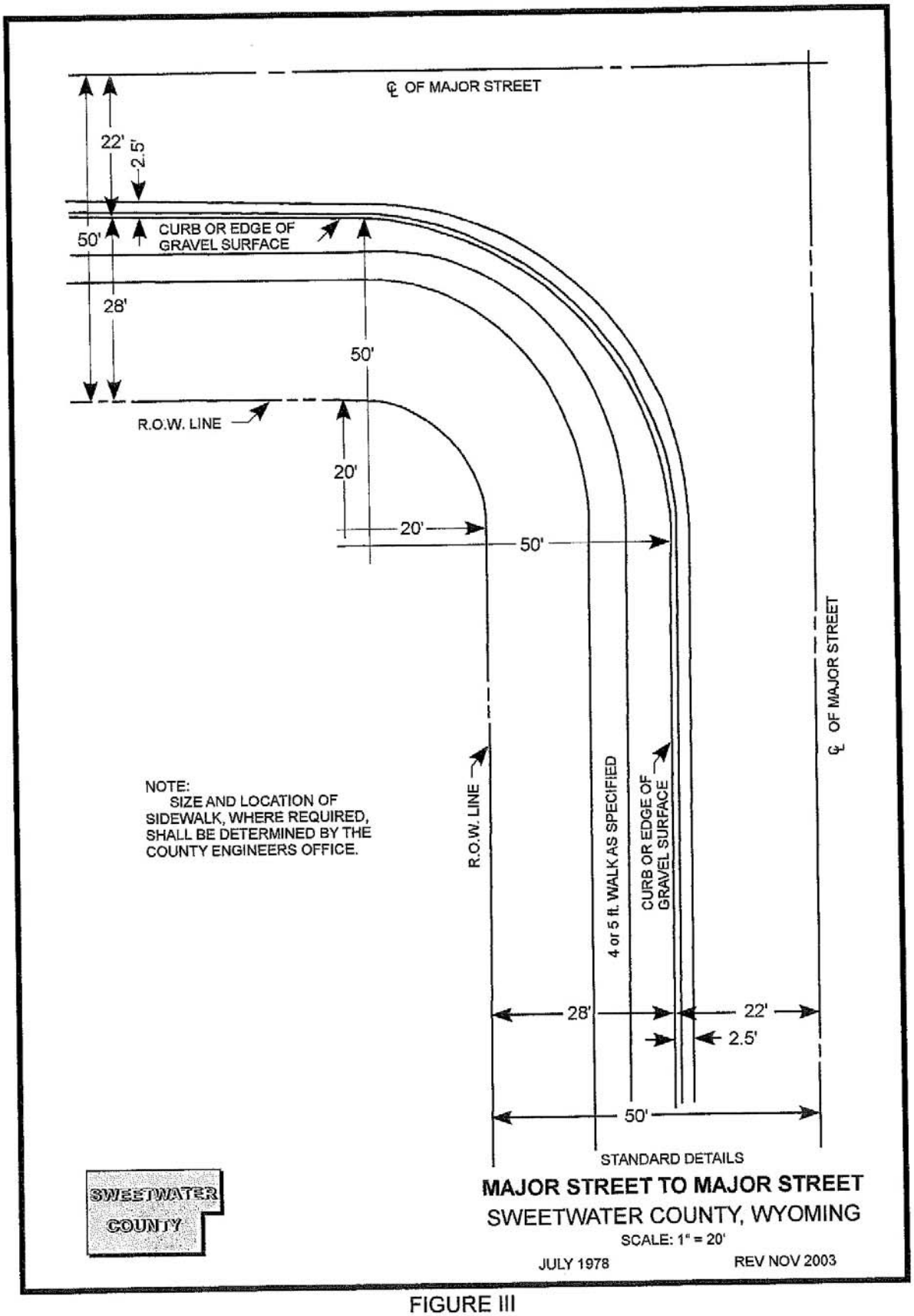
℄ OF MAJOR STREET
22'
2.5'
50'
CURB OR EDGE OF GRAVEL SURFACE
28'
50'
R.O.W. LINE
20'
20'
50'
℄ OF MAJOR STREET
NOTE:
SIZE AND LOCATION OF SIDEWALK, WHERE REQUIRED, SHALL BE DETERMINED BY THE COUNTY ENGINEERS OFFICE.
R.O.W. LINE
4 or 5 ft. WALK AS SPECIFIED
CURB OR EDGE OF GRAVEL SURFACE
28'
22'
2.5'
50'
STANDARD DETAILS
SWEETWATER COUNTY
MAJOR STREET TO MAJOR STREET
SWEETWATER COUNTY, WYOMING
SCALE: 1" = 20'
JULY 1978
REV NOV 2003

FIGURE III

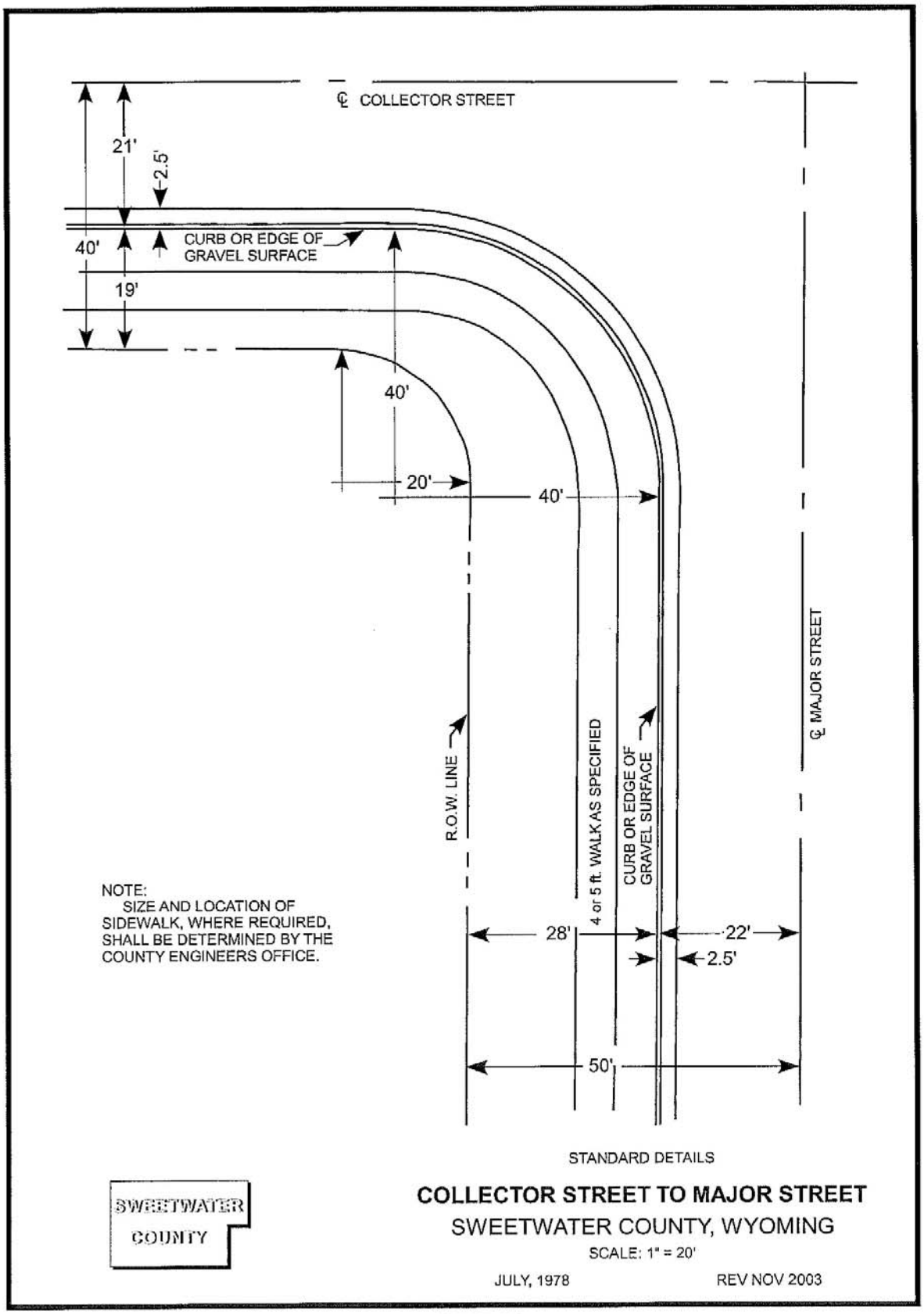
℄ COLLECTOR STREET
21'
2.5'
40'
CURB OR EDGE OF GRAVEL SURFACE
19'
40'
20'
40'
R.O.W. LINE
4 or 5 ft. WALK AS SPECIFIED
CURB OR EDGE OF GRAVEL SURFACE
℄ MAJOR STREET
NOTE:
SIZE AND LOCATION OF SIDEWALK, WHERE REQUIRED, SHALL BE DETERMINED BY THE COUNTY ENGINEERS OFFICE.
28'
22'
2.5'
50'
STANDARD DETAILS
SWEETWATER COUNTY
COLLECTOR STREET TO MAJOR STREET
SWEETWATER COUNTY, WYOMING
SCALE: 1" = 20'
JULY, 1978
REV NOV 2003

FIGURE IV

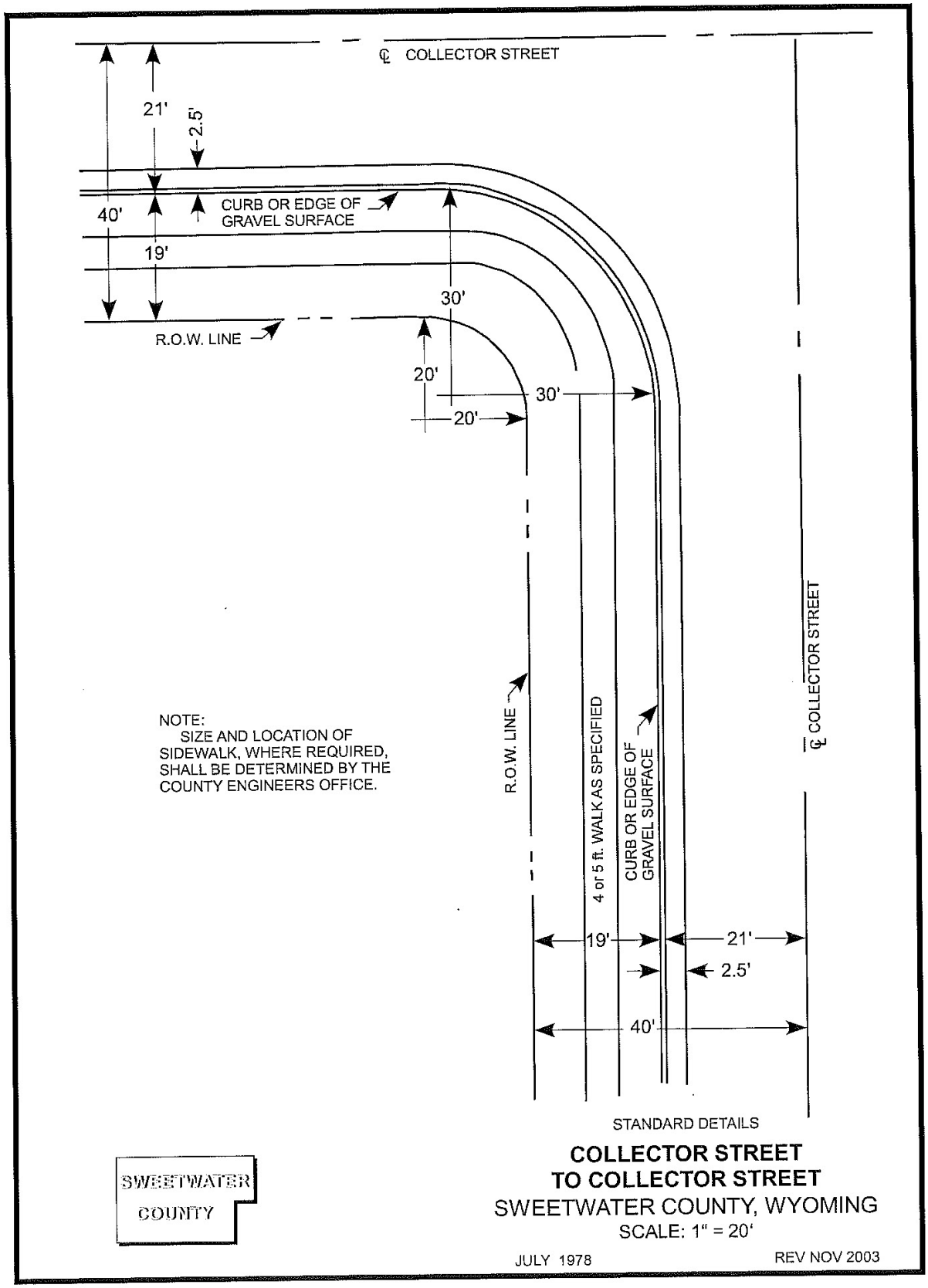
℄ COLLECTOR STREET
21'
2.5'
40'
CURB OR EDGE OF GRAVEL SURFACE
19'
30'
R.O.W. LINE
20'
30'
20'
NOTE:
SIZE AND LOCATION OF SIDEWALK, WHERE REQUIRED, SHALL BE DETERMINED BY THE COUNTY ENGINEERS OFFICE.
R.O.W. LINE
4 or 5 ft. WALK AS SPECIFIED
CURB OR EDGE OF GRAVEL SURFACE
℄ COLLECTOR STREET
19'
21'
2.5'
40'
STANDARD DETAILS
COLLECTOR STREET
TO COLLECTOR STREET
SWEETWATER COUNTY, WYOMING
SCALE: 1" = 20'
SWEETWATER
COUNTY
JULY 1978
REV NOV 2003

FIGURE V

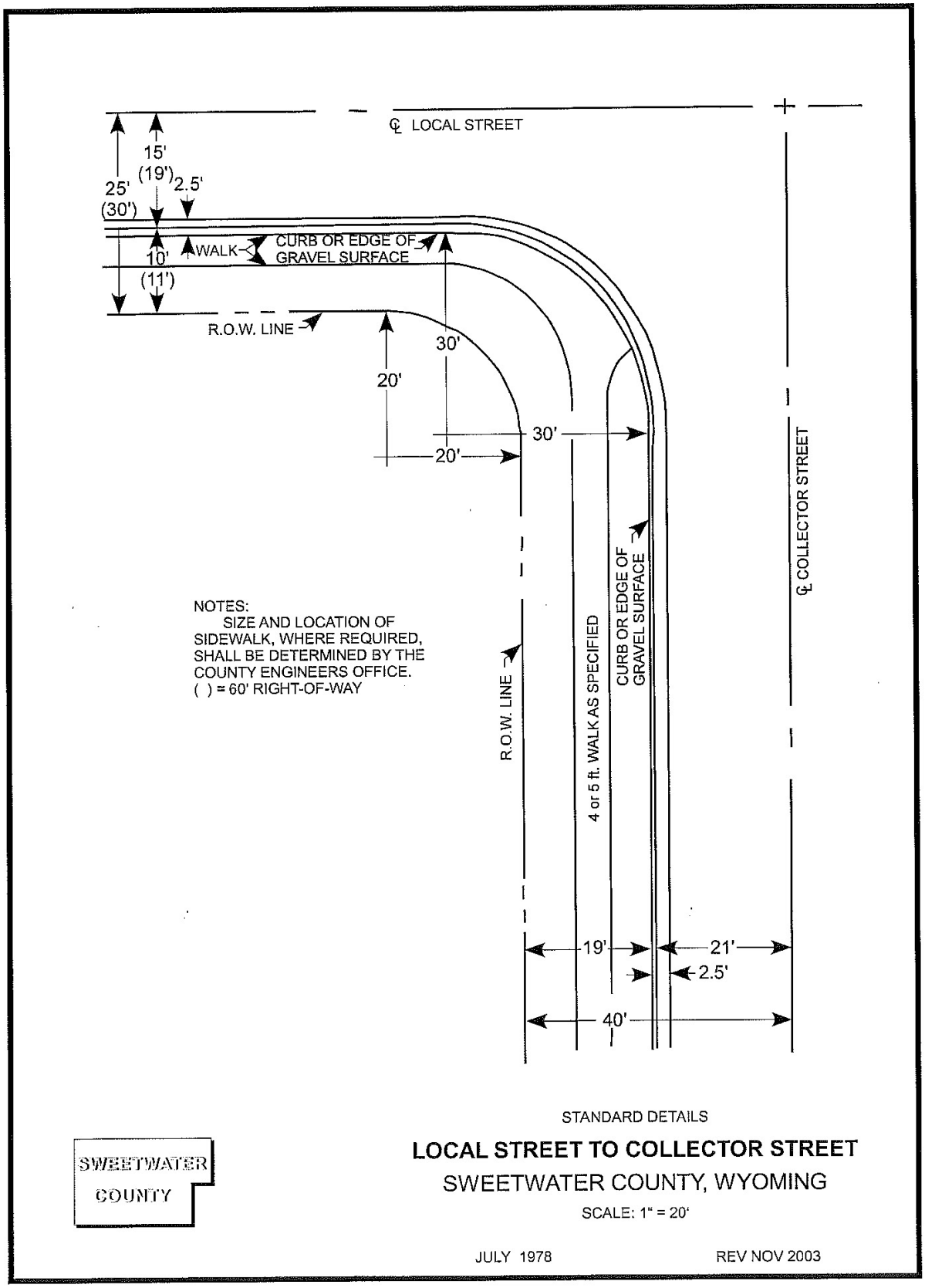
℄ LOCAL STREET
15'
(19')
2.5'
25'
(30')
10'
(11')
WALK
CURB OR EDGE OF GRAVEL SURFACE
R.O.W. LINE
30'
20'
30'
20'
℄ COLLECTOR STREET
CURB OR EDGE OF GRAVEL SURFACE
4 or 5 ft. WALK AS SPECIFIED
R.O.W. LINE
NOTES:
SIZE AND LOCATION OF SIDEWALK, WHERE REQUIRED, SHALL BE DETERMINED BY THE COUNTY ENGINEERS OFFICE.
( ) = 60' RIGHT-OF-WAY
19'
21'
2.5'
40'
STANDARD DETAILS
LOCAL STREET TO COLLECTOR STREET
SWEETWATER COUNTY, WYOMING
SCALE: 1" = 20'
SWEETWATER COUNTY
JULY 1978
REV NOV 2003

FIGURE VI

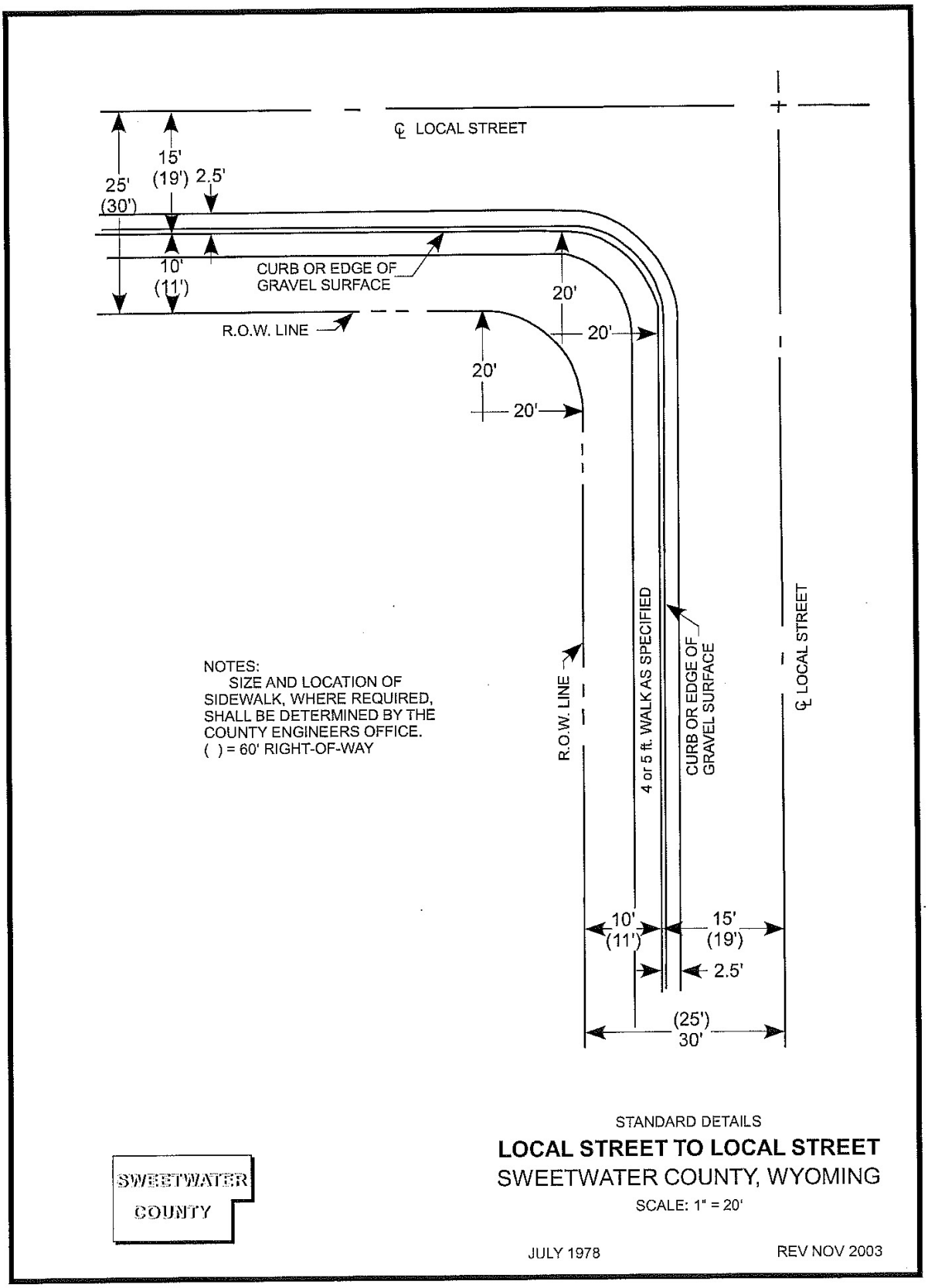
℄ LOCAL STREET
25'
(30')
15'
(19')
2.5'
10'
(11')
CURB OR EDGE OF
GRAVEL SURFACE
R.O.W. LINE
20'
20'
20'
20'
NOTES:
SIZE AND LOCATION OF
SIDEWALK, WHERE REQUIRED,
SHALL BE DETERMINED BY THE
COUNTY ENGINEERS OFFICE.
( ) = 60' RIGHT-OF-WAY
R.O.W. LINE
4 or 5 ft. WALK AS SPECIFIED
CURB OR EDGE OF
GRAVEL SURFACE
℄ LOCAL STREET
10'
(11')
15'
(19')
2.5'
(25')
30'
STANDARD DETAILS
LOCAL STREET TO LOCAL STREET
SWEETWATER COUNTY, WYOMING
SCALE: 1" = 20'
SWEETWATER
COUNTY
JULY 1978
REV NOV 2003

FIGURE VII

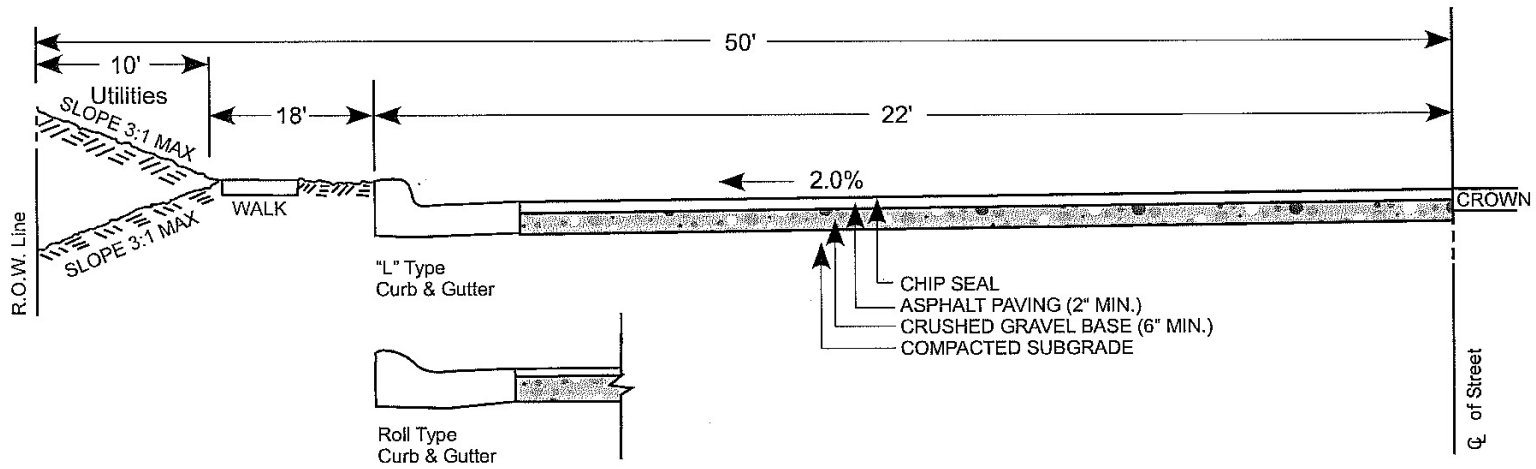

NOTE

GRAVEL BASE THICKNESS IS DEPENDENT UPON QUALITY OF SUBGRADE AS DETERMINED FROM SOIL PROFILES AND TESTS MADE BY A QUALIFIED TESTING LABORATORY.

THICKNESS OF ASPHALT PAVING TO BE BASED ON TRAFFIC DENSITY AND DESIGN WHEEL LOADS.

GRAVEL AND ASPHALT PAVING SHALL CONFORM TO WYOMING HIGHWAY DEPT. SPECIFICATIONS.

STANDARD DETAIL

MAJOR COLLECTOR STREETS

(PAVED SURFACE)

SWEETWATER COUNTY, WYOMING

NO SCALE

JULY, 1978

REV NOV 2003

REV FEB 2005

SWEETWATER COUNTY

FIGURE VIII

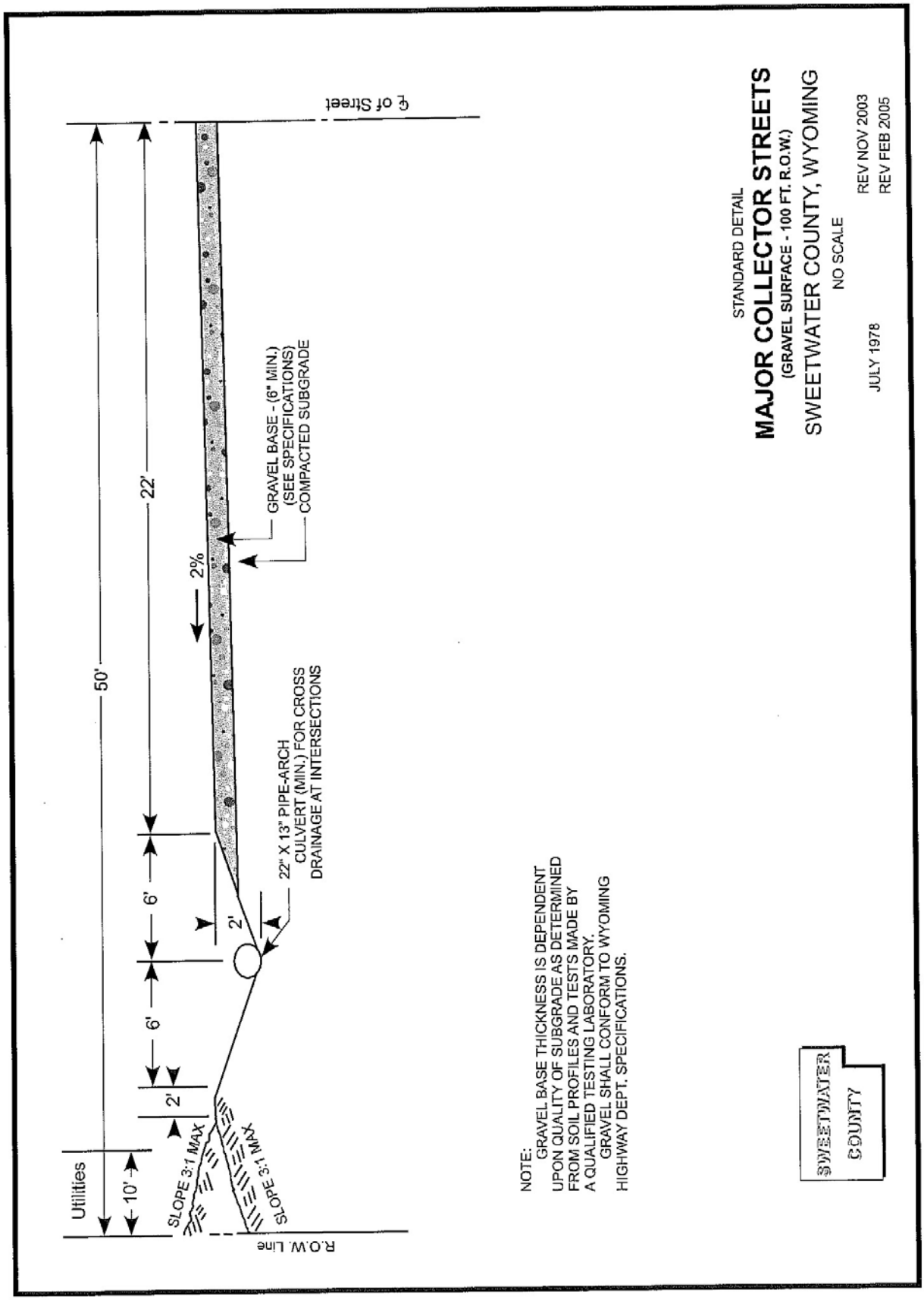
STANDARD DETAIL
MAJOR COLLECTOR STREETS
(GRAVEL SURFACE - 100 FT. R.O.W.)
SWEETWATER COUNTY, WYOMING
NO SCALE
JULY 1978
REV NOV 2003
REV FEB 2005
SWEETWATER COUNTY
NOTE:
GRAVEL BASE THICKNESS IS DEPENDENT UPON QUALITY OF SUBGRADE AS DETERMINED FROM SOIL PROFILES AND TESTS MADE BY A QUALIFIED TESTING LABORATORY. GRAVEL SHALL CONFORM TO WYOMING HIGHWAY DEPT. SPECIFICATIONS.
Utilities
10'
50'
22'
6'
6'
2'
2'
2%
SLOPE 3:1 MAX
SLOPE 3:1 MAX
22" X 13" PIPE-ARCH CULVERT (MIN.) FOR CROSS DRAINAGE AT INTERSECTIONS
GRAVEL BASE - (6" MIN.) (SEE SPECIFICATIONS) COMPACTED SUBGRADE
R.O.W. Line
℄ of Street

FIGURE IX

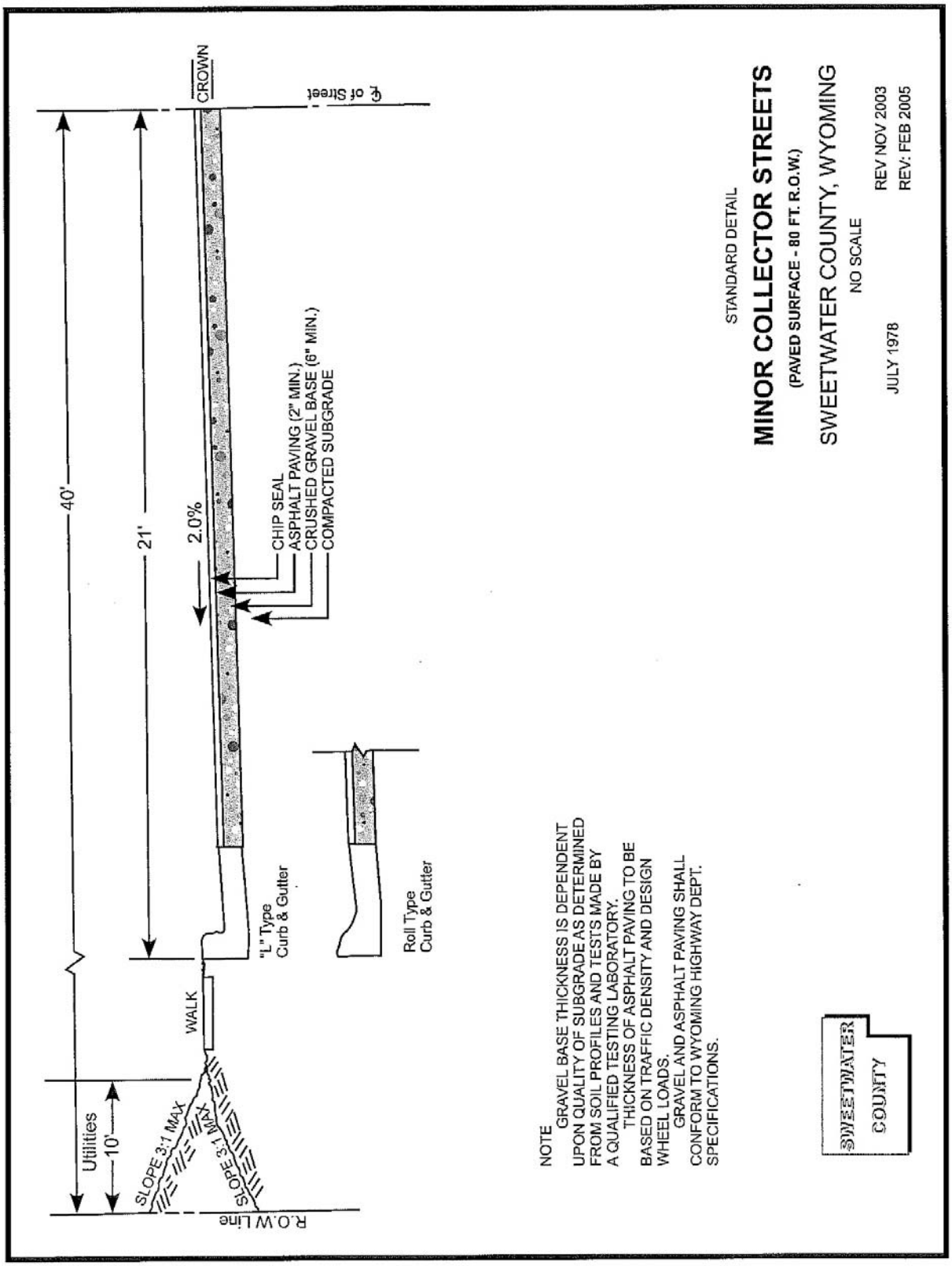
40'
21'
2.0%
CROWN
℄ of Street
CHIP SEAL
ASPHALT PAVING (2" MIN.)
CRUSHED GRAVEL BASE (6" MIN.)
COMPACTED SUBGRADE
"L" Type
Curb & Gutter
Roll Type
Curb & Gutter
WALK
Utilities
10'
SLOPE 3:1 MAX
SLOPE 3:1 MAX
R.O.W. Line
NOTE
GRAVEL BASE THICKNESS IS DEPENDENT UPON QUALITY OF SUBGRADE AS DETERMINED FROM SOIL PROFILES AND TESTS MADE BY A QUALIFIED TESTING LABORATORY.
THICKNESS OF ASPHALT PAVING TO BE BASED ON TRAFFIC DENSITY AND DESIGN WHEEL LOADS.
GRAVEL AND ASPHALT PAVING SHALL CONFORM TO WYOMING HIGHWAY DEPT. SPECIFICATIONS.
SWEETWATER
COUNTY
STANDARD DETAIL
MINOR COLLECTOR STREETS
(PAVED SURFACE - 80 FT. R.O.W.)
SWEETWATER COUNTY, WYOMING
NO SCALE
JULY 1978
REV NOV 2003
REV: FEB 2005

FIGURE X

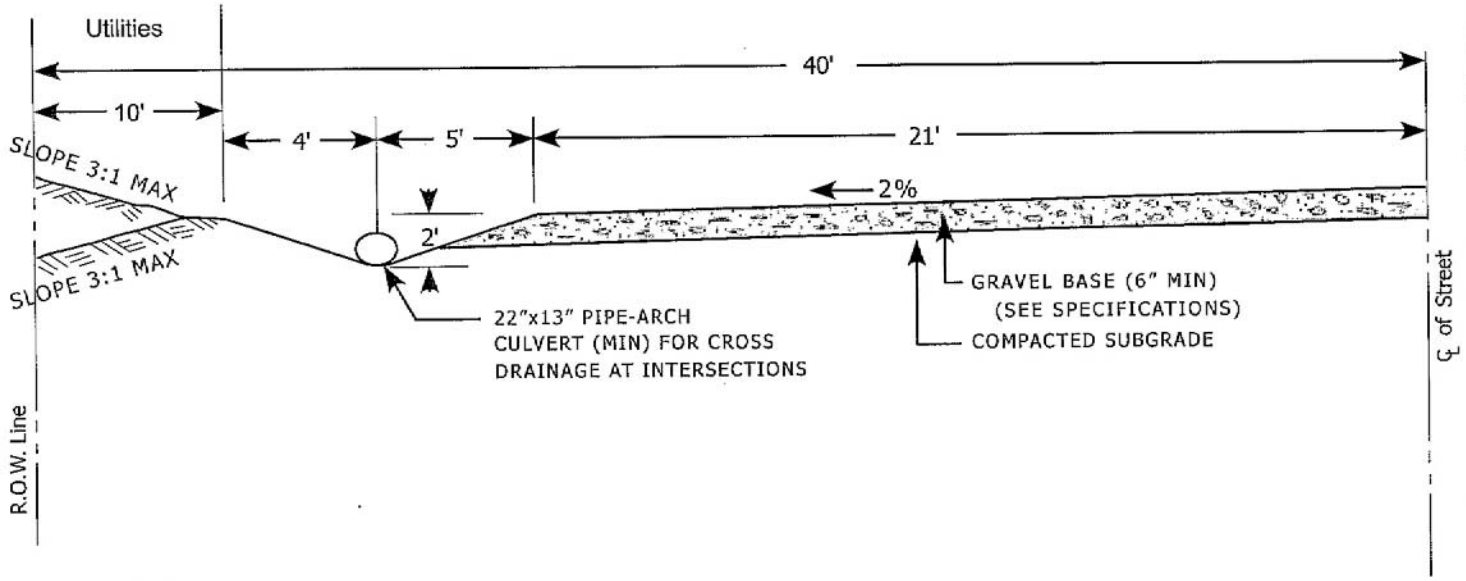

NOTE:

GRAVEL BASE THICKNESS IS DEPENDENT UPON QUALITY OF SUBGRADE AS DETERMINED FROM SOILS PROFILES AND TESTS MADE BY A QUALIFIED TESTING LABORATORY

GRAVEL SHALL CONFORM TO WYOMING HIGHWAY DEPT. SPECIFICATIONS.

STANDARD DETAIL

MINOR COLLECTOR STREETS

(GRAVEL SURFACE - 80 FT. R.O.W.)

SWEETWATER COUNTY, WYOMING

NO SCALE

JULY 1978

REV NOV 2003
REV: FEB 2005

SWEETWATER COUNTY

FIGURE XI

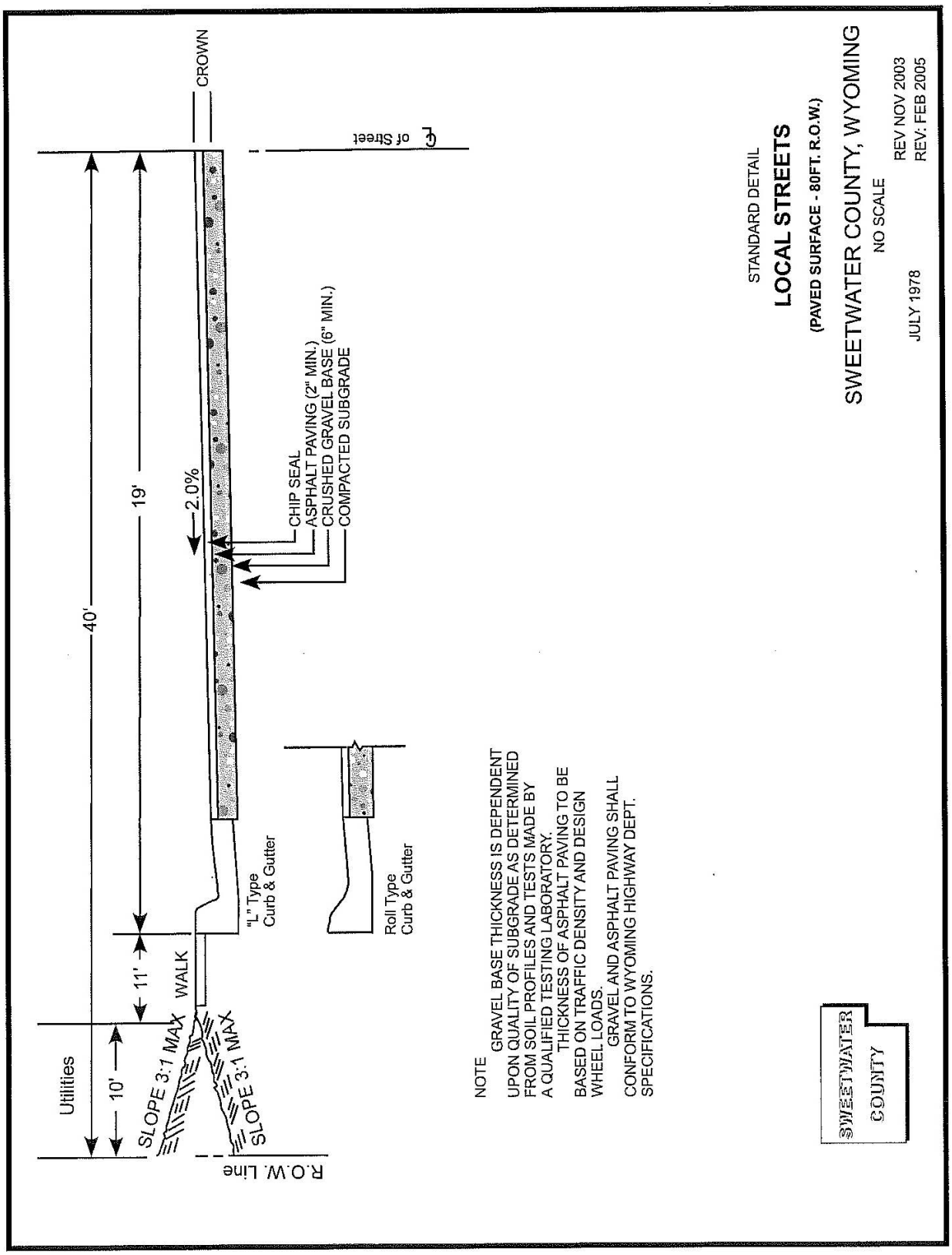
CROWN
℄ of Street
40'
19'
2.0%
CHIP SEAL
ASPHALT PAVING (2" MIN.)
CRUSHED GRAVEL BASE (6" MIN.)
COMPACTED SUBGRADE
Utilities
10'
11'
WALK
SLOPE 3:1 MAX
SLOPE 3:1 MAX
"L" Type
Curb & Gutter
Roll Type
Curb & Gutter
R.O.W. Line
NOTE
GRAVEL BASE THICKNESS IS DEPENDENT UPON QUALITY OF SUBGRADE AS DETERMINED FROM SOIL PROFILES AND TESTS MADE BY A QUALIFIED TESTING LABORATORY.
THICKNESS OF ASPHALT PAVING TO BE BASED ON TRAFFIC DENSITY AND DESIGN WHEEL LOADS.
GRAVEL AND ASPHALT PAVING SHALL CONFORM TO WYOMING HIGHWAY DEPT. SPECIFICATIONS.
STANDARD DETAIL
LOCAL STREETS
(PAVED SURFACE - 80FT. R.O.W.)
SWEETWATER COUNTY, WYOMING
NO SCALE
JULY 1978
REV NOV 2003
REV: FEB 2005
SWEETWATER
COUNTY

FIGURE XII

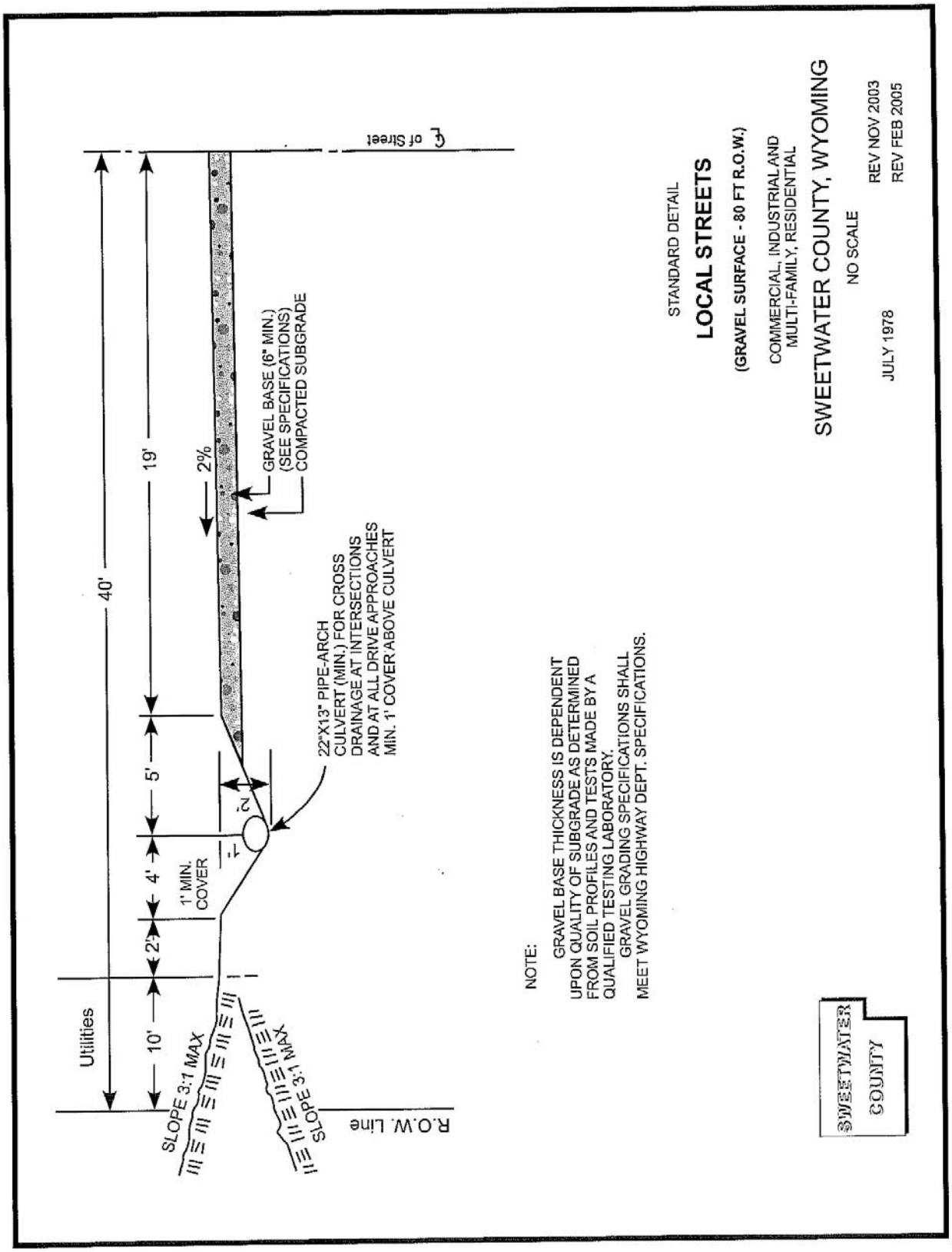
Utilities
40'
10'
2'
4'
5'
19'
1' MIN. COVER
2'
1'
2%
SLOPE 3:1 MAX
SLOPE 3:1 MAX
R.O.W. Line
℄ of Street
GRAVEL BASE (6" MIN.) (SEE SPECIFICATIONS) COMPACTED SUBGRADE
22"X13" PIPE-ARCH CULVERT (MIN.) FOR CROSS DRAINAGE AT INTERSECTIONS AND AT ALL DRIVE APPROACHES MIN. 1' COVER ABOVE CULVERT
NOTE:
GRAVEL BASE THICKNESS IS DEPENDENT UPON QUALITY OF SUBGRADE AS DETERMINED FROM SOIL PROFILES AND TESTS MADE BY A QUALIFIED TESTING LABORATORY.
GRAVEL GRADING SPECIFICATIONS SHALL MEET WYOMING HIGHWAY DEPT. SPECIFICATIONS.
STANDARD DETAIL
LOCAL STREETS
(GRAVEL SURFACE - 80 FT R.O.W.)
COMMERCIAL, INDUSTRIAL AND MULTI-FAMILY, RESIDENTIAL
SWEETWATER COUNTY, WYOMING
NO SCALE
JULY 1978
REV NOV 2003
REV FEB 2005
SWEETWATER COUNTY

FIGURE XIII

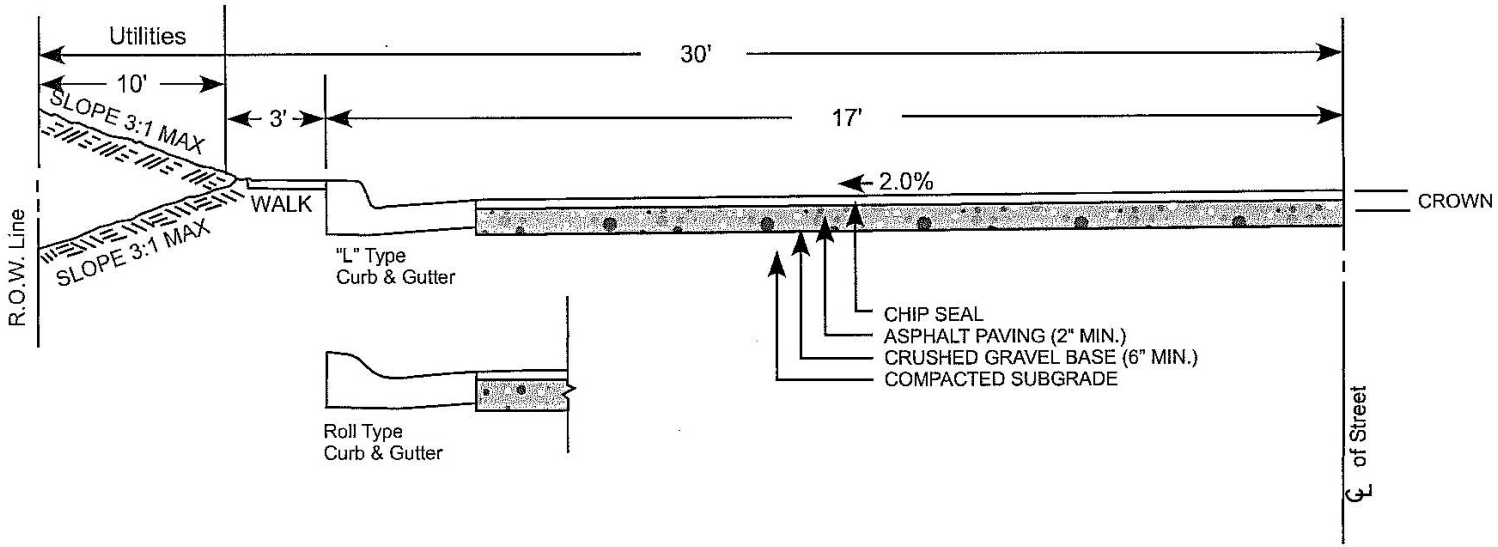

NOTE:

GRAVEL BASE THICKNESS IS DEPENDENT UPON QUALITY OF SUBGRADE AS DETERMINED FROM SOILS PROFILES AND TESTS MADE BY A QUALIFIED TESTING LABORATORY.

THICKNESS OF ASPHALT PAVING TO BE BASED ON TRAFFIC DENSITY AND DESIGN WHEEL LOADS.

GRAVEL AND ASPHALT PAVING SHALL CONFORM TO WYOMING HIGHWAY DEPT. SPECIFICATIONS.

SWEETWATER COUNTY

STANDARD DETAIL

LOCAL STREETS

(PAVED SURFACE - 70 FT. R.O.W.)

SWEETWATER COUNTY, WYOMING

NO SCALE

JULY 1978

REV NOV 2003

REV FEB 2005

FIGURE XIV

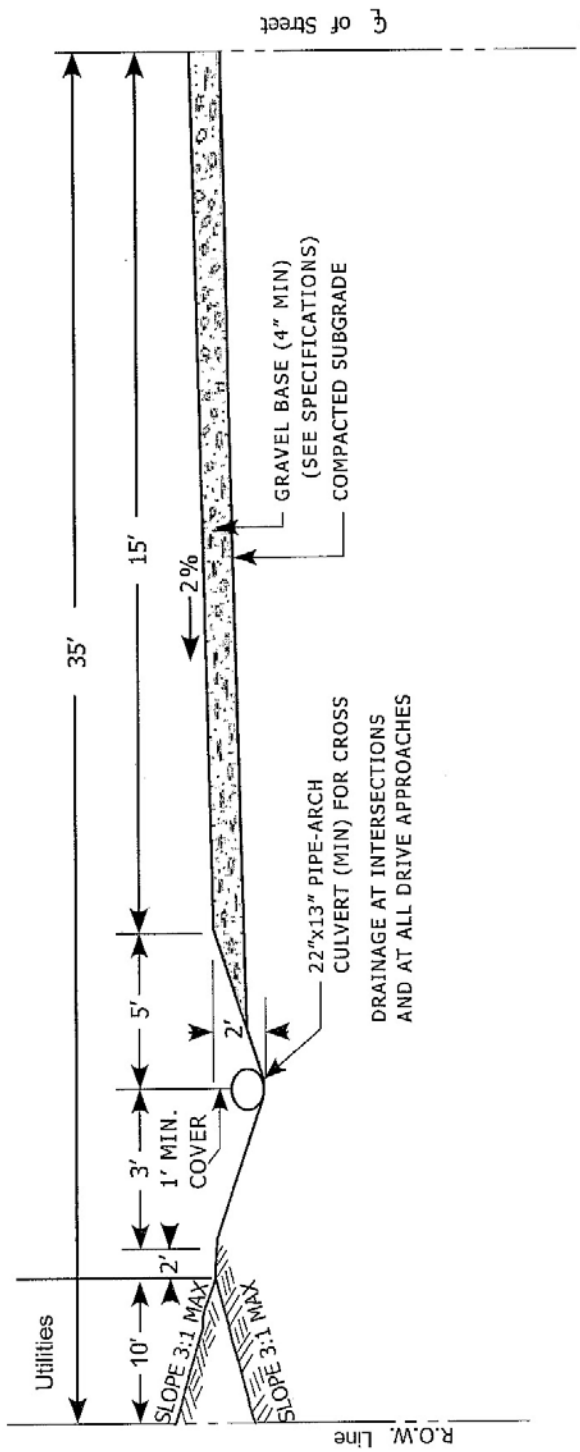

NOTE:

GRAVEL BASE THICKNESS IS DEPENDENT UPON QUALITY OF SUBGRADE AS DETERMINED FROM SOILS PROFILES AND TESTS MADE BY A QUALIFIED TESTING LABORATORY

GRAVEL GRADING SPECIFICATIONS SHALL MEET WYOMING HIGHWAY DEPT. SPECIFICATIONS.

STANDARD DETAIL
LOCAL STREETS
(GRAVEL SURFACE-60FT. R.O.W)
LOW DENSITY RESIDENTIAL
SWEETWATER COUNTY, WYOMING
NO SCALE
JULY 1978
REV NOV 2003
REV FEB 2005

SWEETWATER COUNTY

FIGURE XV

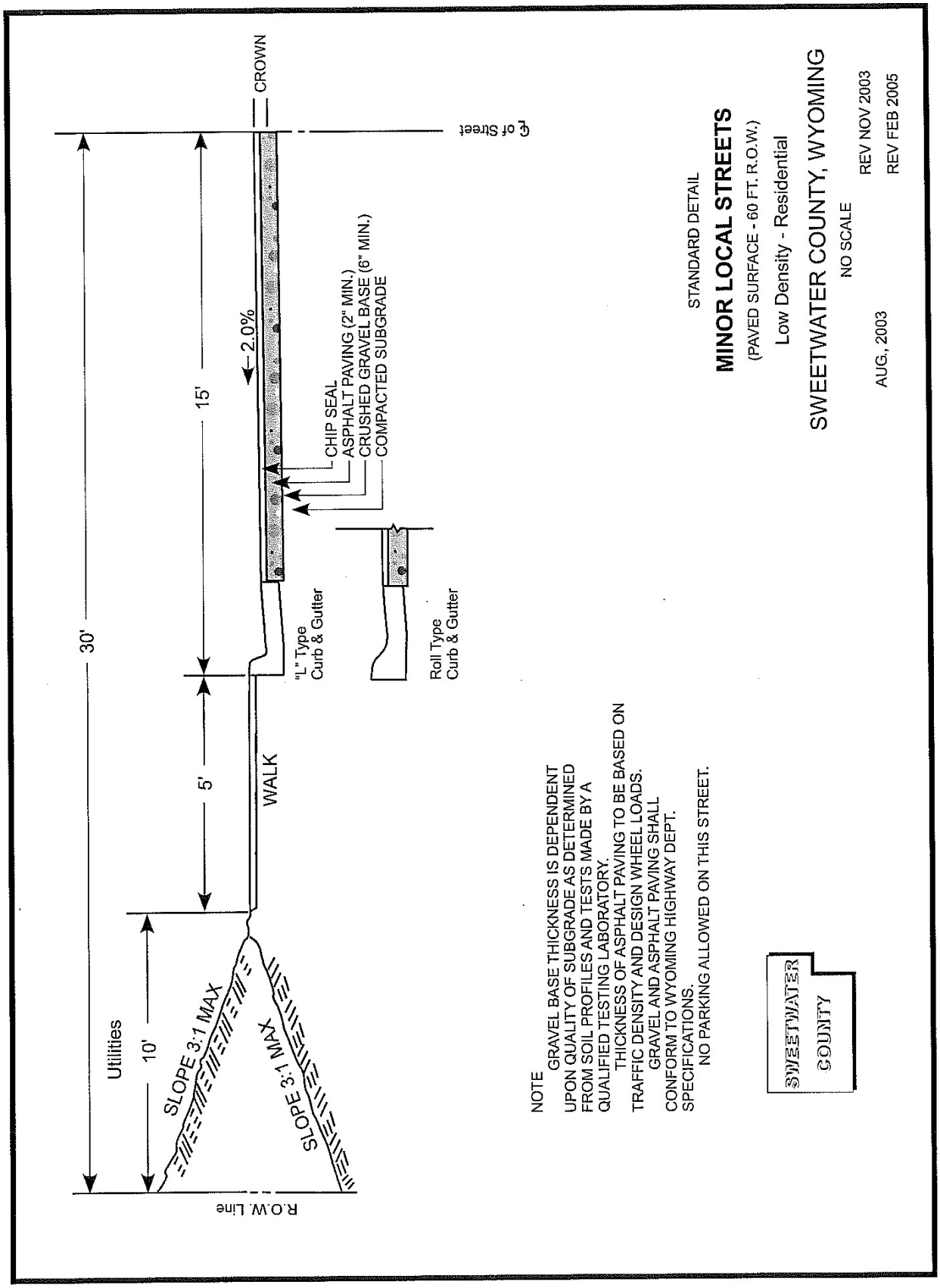
CROWN
℄ of Street
30'
15'
2.0%
CHIP SEAL
ASPHALT PAVING (2" MIN.)
CRUSHED GRAVEL BASE (6" MIN.)
COMPACTED SUBGRADE
"L" Type
Curb & Gutter
Roll Type
Curb & Gutter
5'
WALK
Utilities
10'
SLOPE 3:1 MAX
SLOPE 3:1 MAX
R.O.W. Line
NOTE
GRAVEL BASE THICKNESS IS DEPENDENT UPON QUALITY OF SUBGRADE AS DETERMINED FROM SOIL PROFILES AND TESTS MADE BY A QUALIFIED TESTING LABORATORY.
THICKNESS OF ASPHALT PAVING TO BE BASED ON TRAFFIC DENSITY AND DESIGN WHEEL LOADS.
GRAVEL AND ASPHALT PAVING SHALL CONFORM TO WYOMING HIGHWAY DEPT. SPECIFICATIONS.
NO PARKING ALLOWED ON THIS STREET.
SWEETWATER
COUNTY
STANDARD DETAIL
MINOR LOCAL STREETS
(PAVED SURFACE - 60 FT. R.O.W.)
Low Density - Residential
SWEETWATER COUNTY, WYOMING
NO SCALE
AUG., 2003
REV NOV 2003
REV FEB 2005

FIGURE XVI

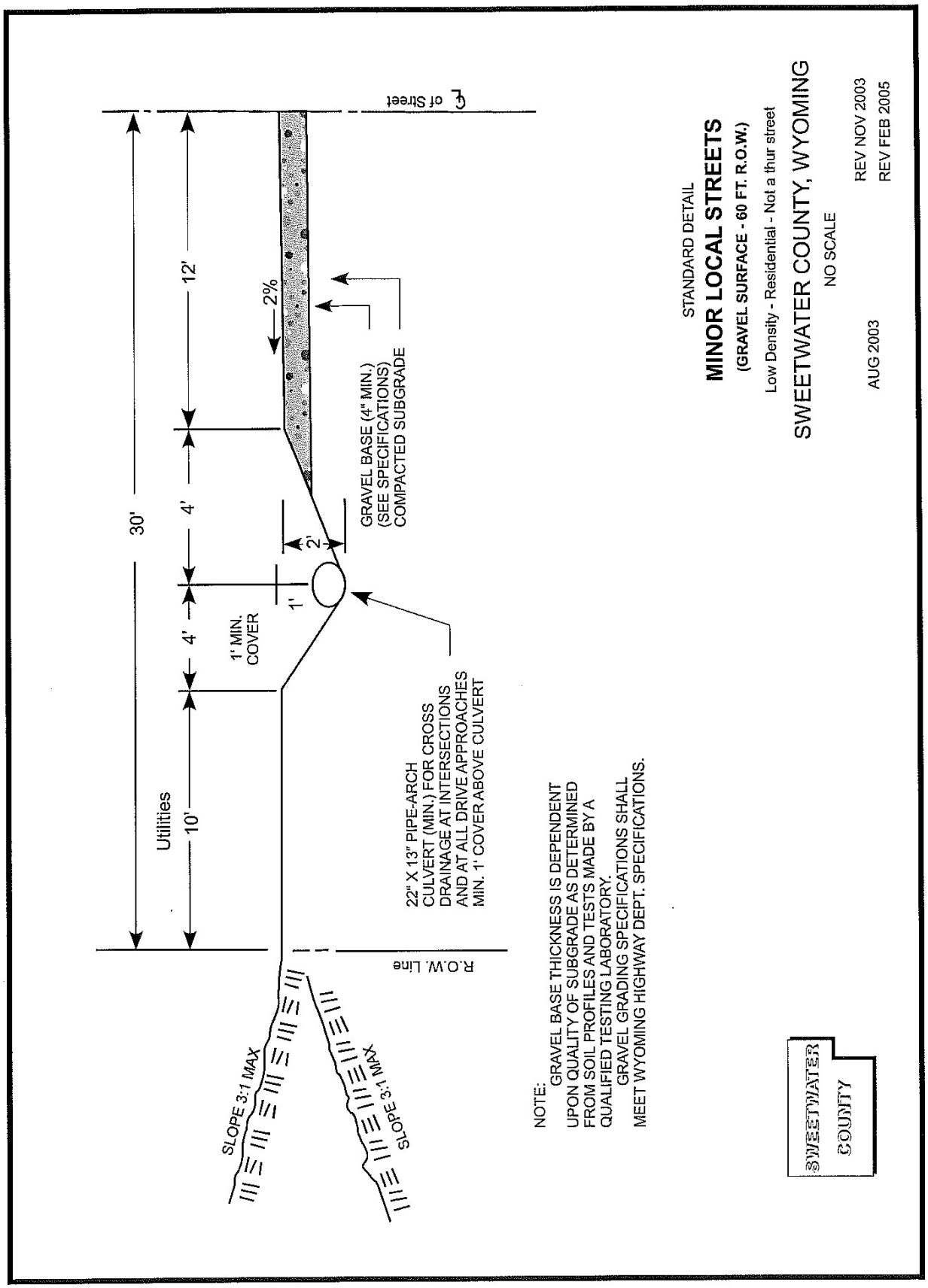
30'
Utilities
10'
4'
4'
12'
1' MIN. COVER
1'
2'
2%
GRAVEL BASE (4" MIN.) (SEE SPECIFICATIONS) COMPACTED SUBGRADE
22" X 13" PIPE-ARCH CULVERT (MIN.) FOR CROSS DRAINAGE AT INTERSECTIONS AND AT ALL DRIVE APPROACHES MIN. 1' COVER ABOVE CULVERT
R.O.W. Line
℄ of Street
SLOPE 3:1 MAX
SLOPE 3:1 MAX
NOTE:
GRAVEL BASE THICKNESS IS DEPENDENT UPON QUALITY OF SUBGRADE AS DETERMINED FROM SOIL PROFILES AND TESTS MADE BY A QUALIFIED TESTING LABORATORY.
GRAVEL GRADING SPECIFICATIONS SHALL MEET WYOMING HIGHWAY DEPT. SPECIFICATIONS.
STANDARD DETAIL
MINOR LOCAL STREETS
(GRAVEL SURFACE - 60 FT. R.O.W.)
Low Density - Residential - Not a thur street
SWEETWATER COUNTY, WYOMING
NO SCALE
AUG 2003
REV NOV 2003
REV FEB 2005
SWEETWATER COUNTY

FIGURE XVII

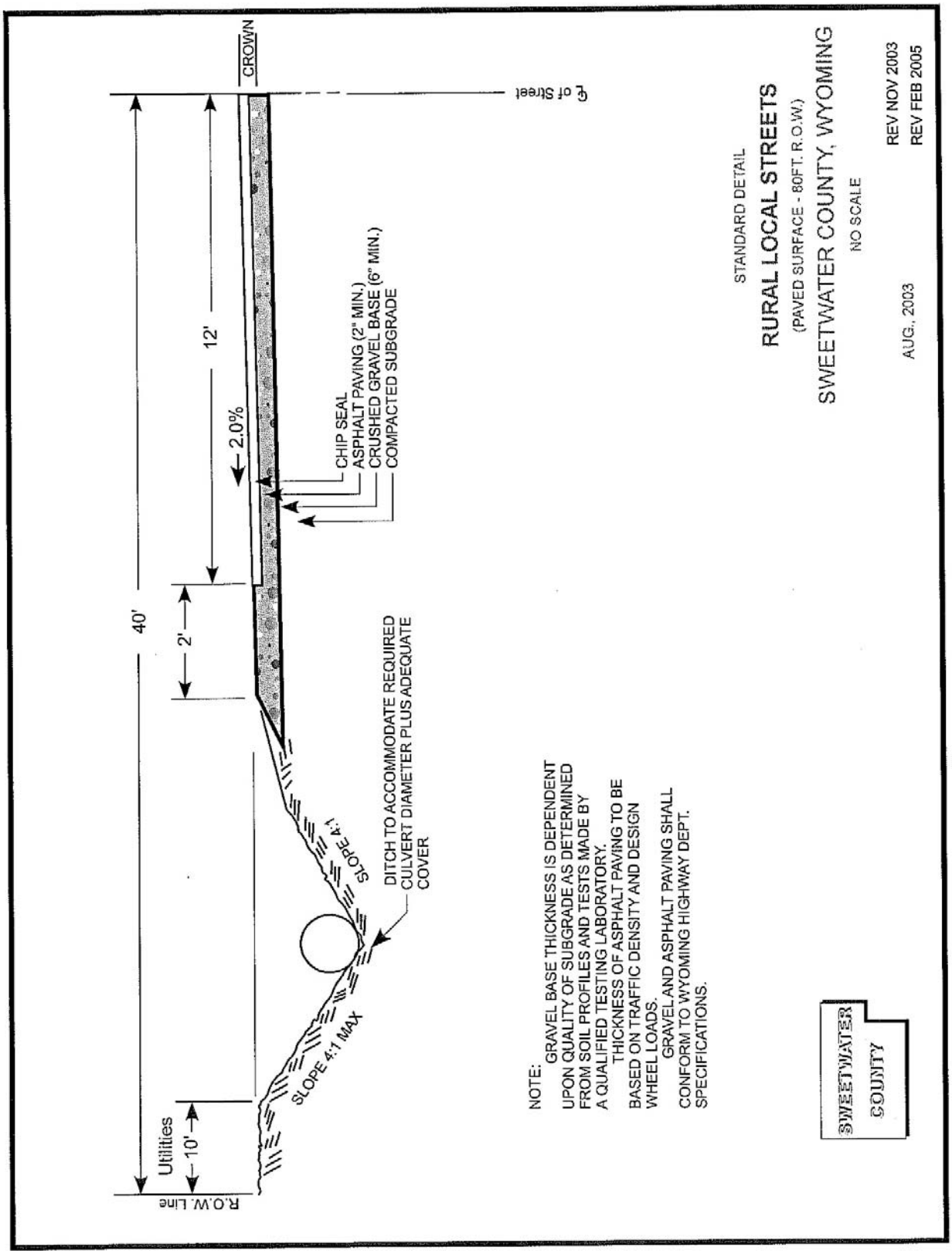

FIGURE XVIII

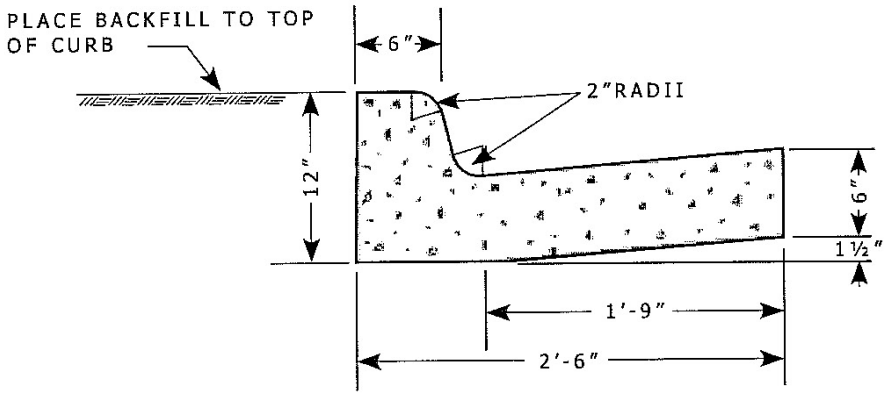

SECTION

SCALE 1"=1'0"

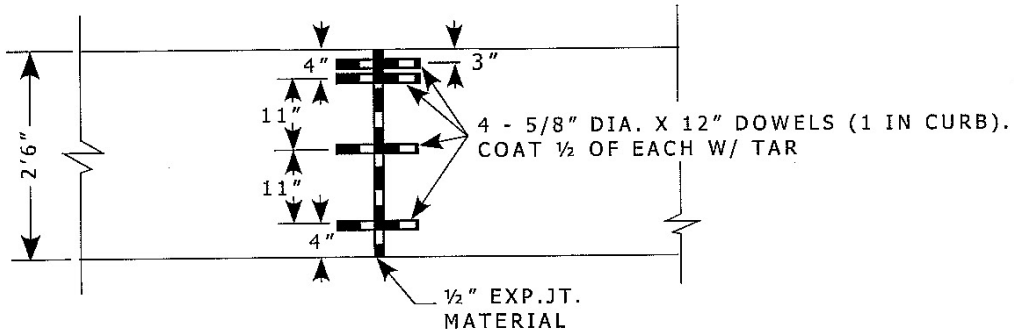

EXPANSION JOINT

SCALE ½"=1'0"

NOTE:
SPACE EXPANSION JOINTS AT 100' AND BETWEEN SEPARATE POURS - OR AS MAY BE DIRECTED. SPACE SCORED JOINTS AT 15'

NOTE:
CONCRETE WORK SHALL CONFORM TO WYOMING HIGHWAY DEPARTMENT SPECIFICATIONS.

SWEETWATER COUNTY

STANDARD DETAIL

"L" TYPE CURB & GUTTER

SWEETWATER COUNTY, WYOMING

SCALE - AS SHOWN

SEPT 23 1971 REV NOV 2003

FIGURE XIX

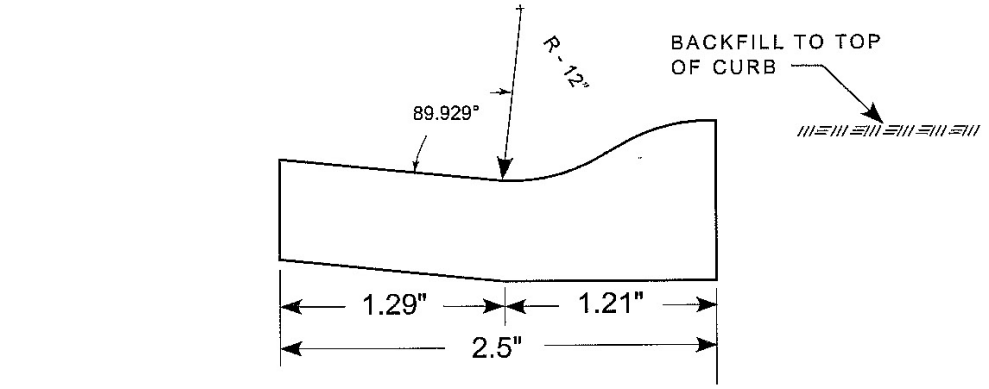

SECTION

SCALE 1"=1'0"

NOTE

SPACE EXPANSION JOINTS AT 100' AND BETWEEN SEPARATE POURS - OR AS DIRECTED SPACE SCORED JOINTS AT 15'

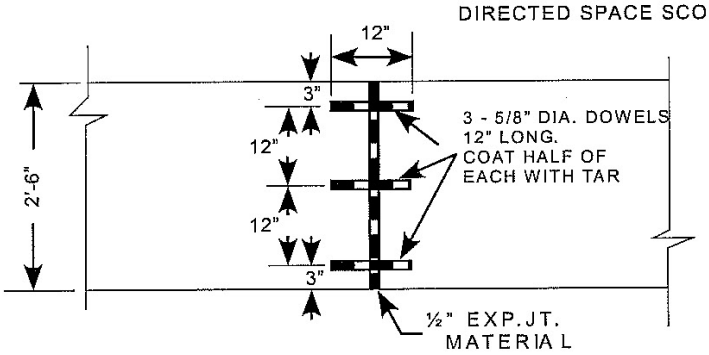

EXPANSION JOINT

SCALE ½"=1'0"

NOTE:

CONCRETE WORK SHALL CONFORM TO WYOMING HIGHWAY DEPARTMENT SPECIFICATIONS.

STANDARD DETAIL

ROLL TYPE CURB & GUTTER

SWEETWATER COUNTY, WYOMING

SCALE - AS SHOWN

SWEETWATER COUNTY

Feb 14, 2001

REV NOV 2003

FIGURE XX

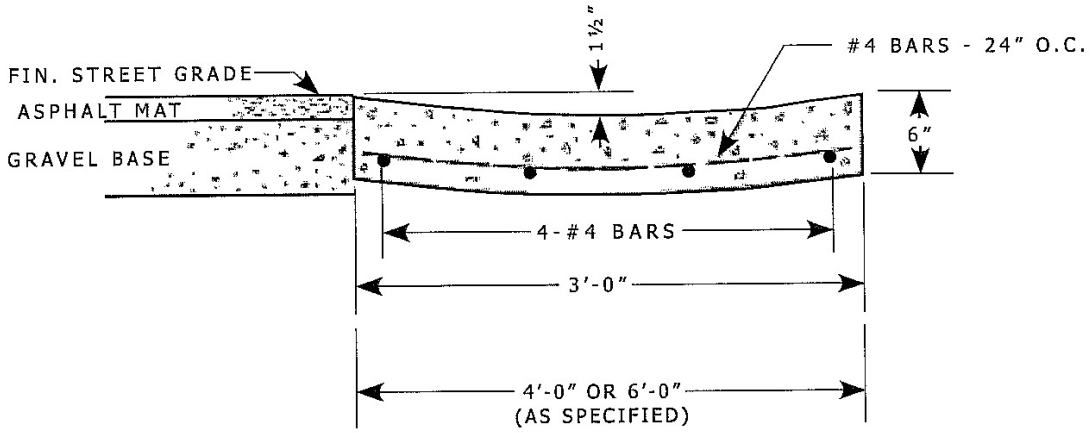

SECTION

SCALE 1"=1'0"

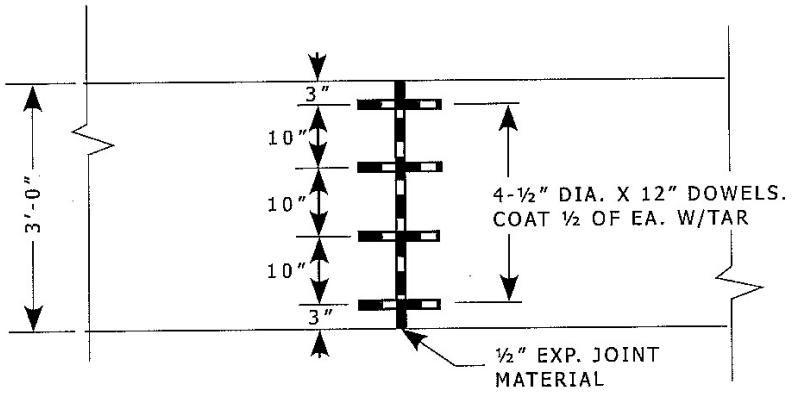

EXPANSION JOINT

SCALE ½"=1'0"

NOTE:

SPACE EXPANSION JOINTS AT 100' AND BETWEEN SEPARATE POURS - OR AS MAY BE DIRECTED.

FOR 48" & 72" WIDTHS, INCREASE RE-BARS IN PROPORTION WITH SAME SPACING.

GUTTER DEPTHS TO BE 2" FOR 48" WIDTH AND 3" FOR 72" WIDTH

TERMINATE RE-BARS AT EACH SIDE OF EXPANSION JOINTS.

NOTE:

CONCRETE WORK SHALL CONFORM TO WYOMING HIGHWAY DEPARTMENT SPECIFICATIONS.

SWEETWATER COUNTY

STANDARD DETAIL

36" VALLEY GUTTER

(48" & 72" - SIMILAR)

SWEETWATER COUNTY, WYOMING

SCALE - AS - SHOWN

SEPT 1971

REV NOV 2003

FIGURE XXI

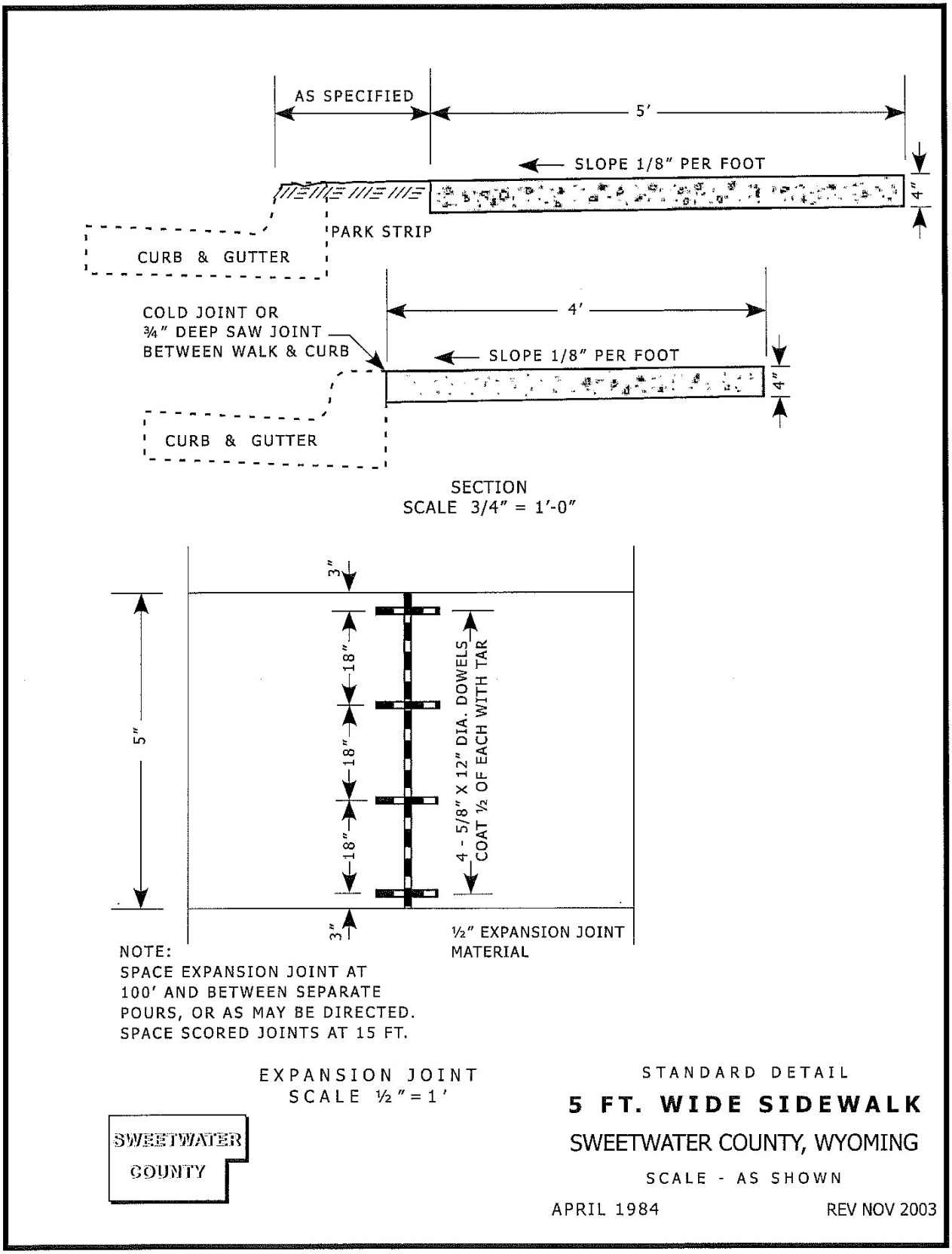
AS SPECIFIED
5'
SLOPE 1/8" PER FOOT
4"
PARK STRIP
CURB & GUTTER
COLD JOINT OR
¾" DEEP SAW JOINT
BETWEEN WALK & CURB
4'
SLOPE 1/8" PER FOOT
4"
CURB & GUTTER
SECTION
SCALE 3/4" = 1'-0"
3"
18"
18"
18"
5"
4 - 5/8" X 12" DIA. DOWELS
COAT ½ OF EACH WITH TAR
3"
½" EXPANSION JOINT
MATERIAL
NOTE:
SPACE EXPANSION JOINT AT
100' AND BETWEEN SEPARATE
POURS, OR AS MAY BE DIRECTED.
SPACE SCORED JOINTS AT 15 FT.
EXPANSION JOINT
SCALE ½" = 1'
SWEETWATER
COUNTY
STANDARD DETAIL
5 FT. WIDE SIDEWALK
SWEETWATER COUNTY, WYOMING
SCALE - AS SHOWN
APRIL 1984
REV NOV 2003

FIGURE XXII

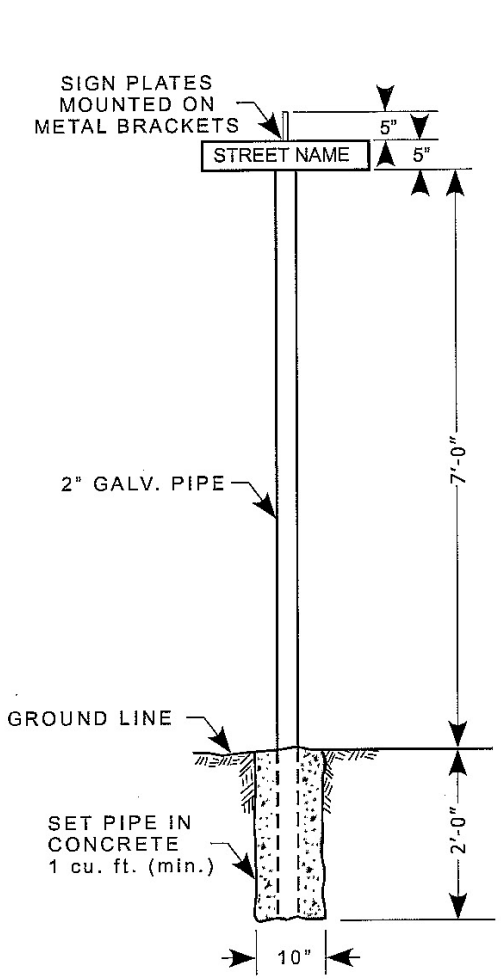

FRONT ELEV.

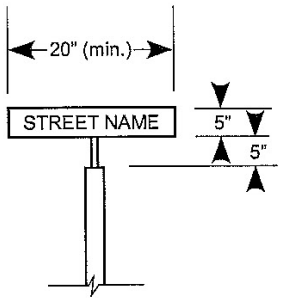

SIDE ELEV.

NOTE:

IN BUSINESS DISTRICTS AND ON MAJOR STREETS TWO SIGNS ARE REQUIRED AT INTERSECTIONS. PLACE ON DIAGONALLY OPPOSITE CORNERS AND ON FAR RIGHT-HAND SIDE FOR APPROACHING TRAFFIC.

IN RESIDENTIAL DISTRICTS AND ON LOCAL STREETS ONE SIGN IS REQUIRED AT EACH INTERSECTION.

ALL SIGNS TO BE DOUBLE FACED TO PERMIT READING FROM EITHER DIRECTION.

SIGN LETTERING SHALL BE A MINIMUM OF 4" HIGH.

ALL SIGNS ARE TO BE LOCATED 6' TO 12' FROM EDGE OF THE ROAD, AND A MIN. OF 7 FEET ABOVE THE ROADWAY SURFACE OR AS APPROVED BY THE COUNTY ENGINEER'S OFFICE.

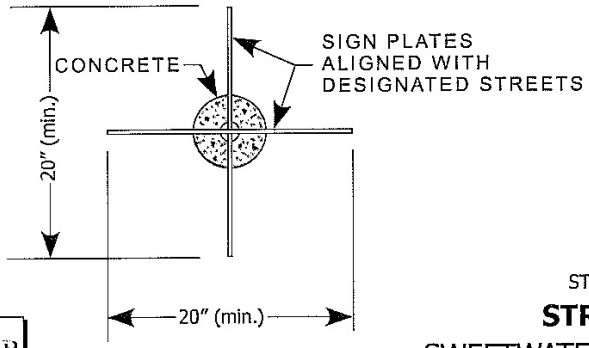

PLAN

SWEETWATER COUNTY

STANDARD DETAIL

STREET SIGNS

SWEETWATER COUNTY, WYOMING

SCALE: ½" = 1'-0"

JULY 1978 REV NOV 2003

FIGURE XXIII

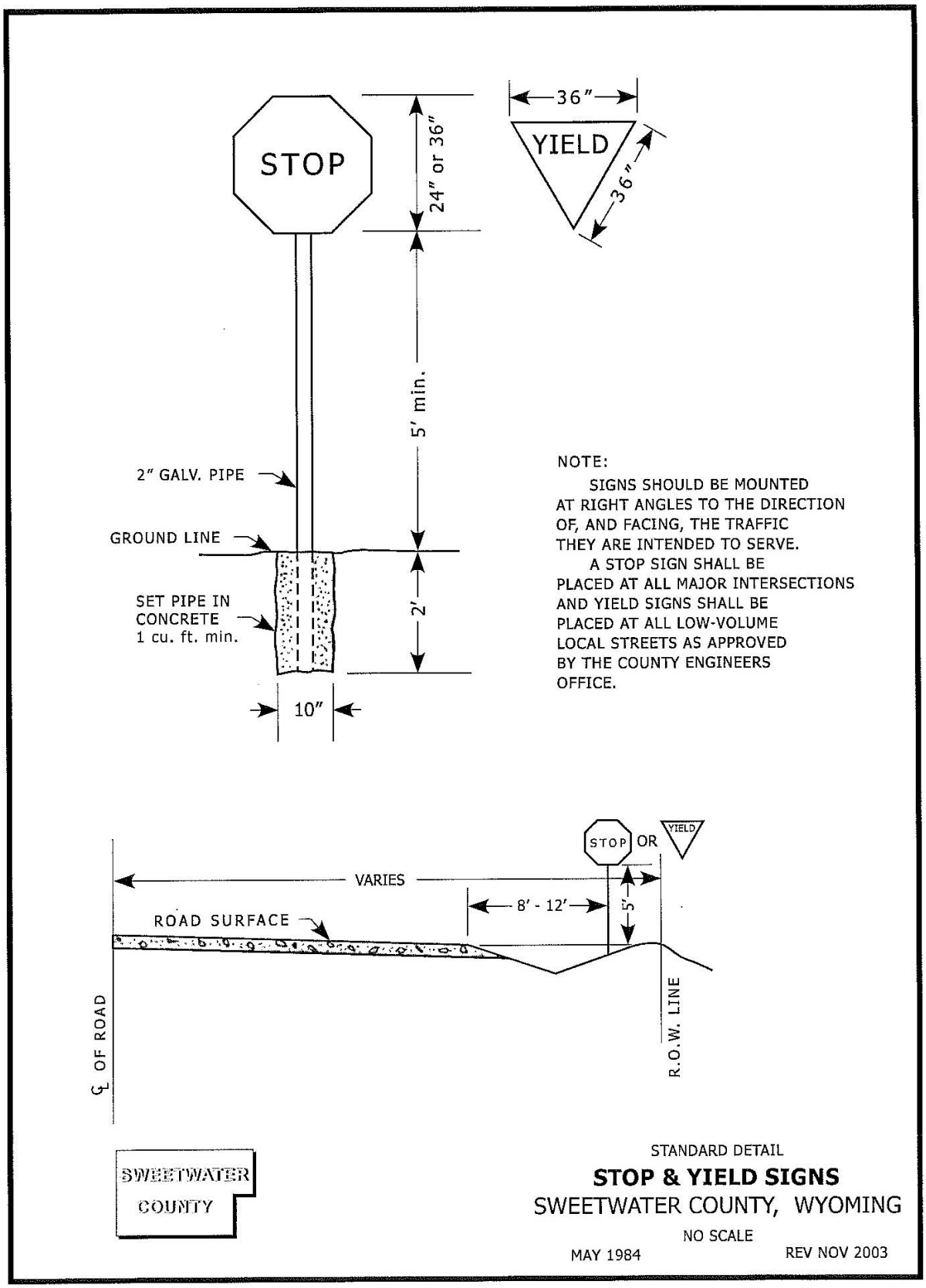
STOP
24" or 36"
36"
YIELD
36"
5' min.
2" GALV. PIPE
GROUND LINE
SET PIPE IN
CONCRETE
1 cu. ft. min.
2'
10"
NOTE:
SIGNS SHOULD BE MOUNTED AT RIGHT ANGLES TO THE DIRECTION OF, AND FACING, THE TRAFFIC THEY ARE INTENDED TO SERVE.
A STOP SIGN SHALL BE PLACED AT ALL MAJOR INTERSECTIONS AND YIELD SIGNS SHALL BE PLACED AT ALL LOW-VOLUME LOCAL STREETS AS APPROVED BY THE COUNTY ENGINEERS OFFICE.
STOP
OR
YIELD
VARIES
8' - 12'
5'
ROAD SURFACE
℄ OF ROAD
R.O.W. LINE
SWEETWATER
COUNTY
STANDARD DETAIL
STOP & YIELD SIGNS
SWEETWATER COUNTY, WYOMING
NO SCALE
MAY 1984
REV NOV 2003

FIGURE XXIV

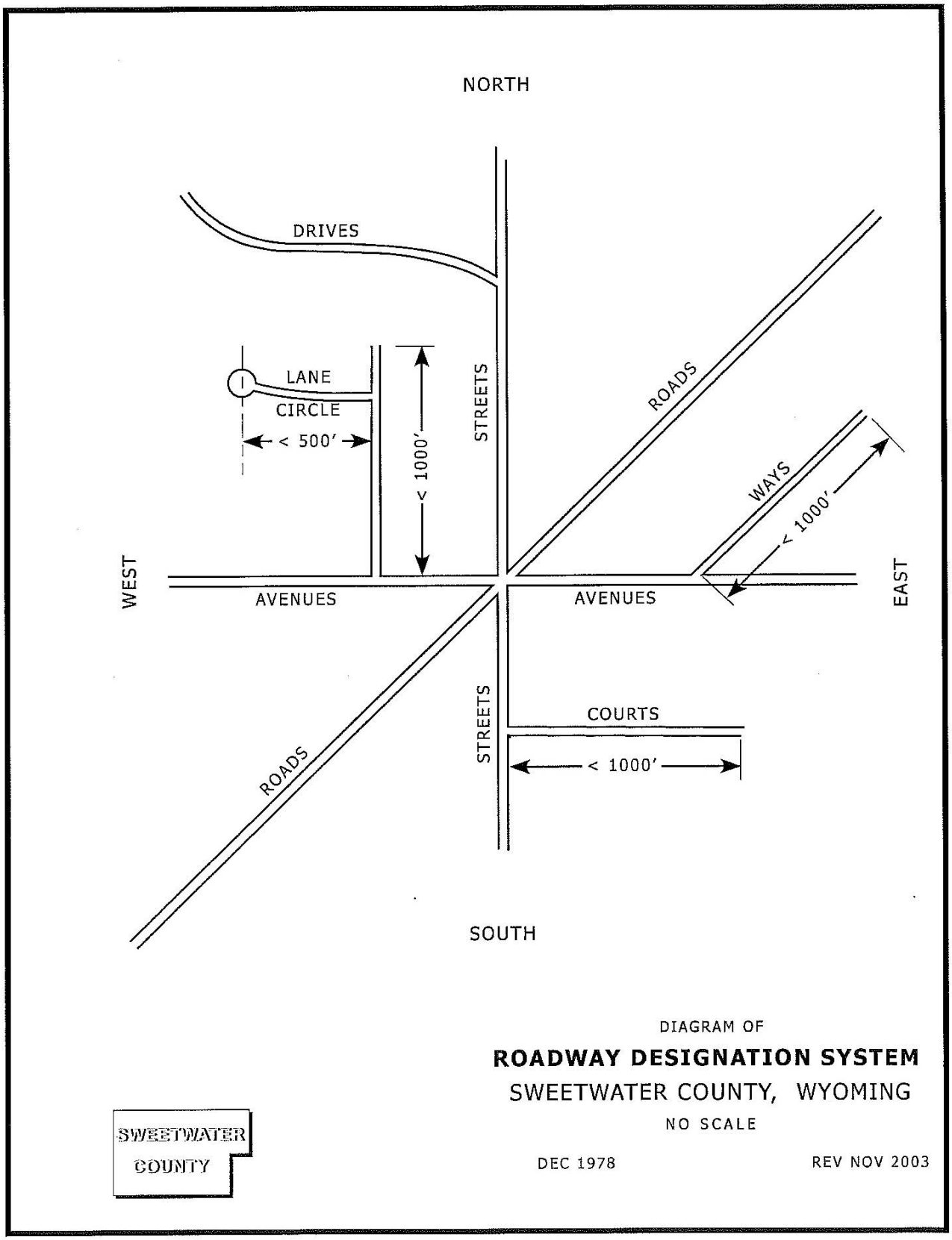
NORTH
DRIVES
LANE
CIRCLE
< 500'
< 1000'
STREETS
ROADS
WAYS
< 1000'
WEST
AVENUES
AVENUES
EAST
STREETS
COURTS
< 1000'
ROADS
SOUTH
DIAGRAM OF
ROADWAY DESIGNATION SYSTEM
SWEETWATER COUNTY, WYOMING
NO SCALE
SWEETWATER
COUNTY
DEC 1978
REV NOV 2003

FIGURE XXV

TABLE OF ACTIONS

DATE	ACTION	RESOLUTION
April 23, 1996	Language Amendment Section 8.a.(5) General Design Standards	96-04-PL-02(c)
August 21, 2001	Language Amendment Section 3.b. (Application) Section 3.c. (Exemptions) Section 4.g. (Recording) Section 13.dd. (Definitions)	01-08-ZO-02
February 2011	Language Amendment Section 5.c.(7) - Amended Language Section 5.b. - Added subsection (3) Section 5.c.(3) - Added subsection (v) Section 9.a.(3)(c) - Amended Language Section 5 - Added subsection E. Section 5 - Added subsection F Added New Appendix - Appendix A Added New Appendix - Appendix B Section 5.c.(3) - Added subsection (w) Section 5.c.(3) - Added subsection (x) Section 8.f.(1) - Amended Language Section 5.d.(6)(d)(i) - Amended Language Section 3.c.(1) & (2) - Amended Language Section 13 - Added Definitions and sorted alphabetically	08-07-CC-02
February 2011	Language Amendment Section 6 - Amended Language	10-11-CC-02
February 2011	Language Amendment Added New Section - Grading Permit Regulations as Section 10 and renumbered subsequent Sections	07-12-CC-01
March 6, 2012	Section 5.f - Repealed Land Division Created by Physical Barriers and replaced with 5.f. Simple Land Division Section 5.e. - Amended Boundary Line Adjustment language Appendix A - Amended Record of Survey language Lot Division Policy - Repealed in its entirety Section 6 - Amended Fees	12-03-CC-01
June 21, 2016	Language Amendment – Replats	16-06-CC-01
September 20, 2022	Language Amendment - Section 3.c. Exemptions	22-09-CC-01