Huntsman's Estates
Traffic Impact Analysis and Sensitivity Analysis

Quincy Road
Burbank, Washington

Prepared for:
JF Engineering, PLLC
5220 S Auburn Place
Kennewick, Washington 99337-4553

John A Manix
2022.07.19
10:54:17-07'00'

July 19, 2022
PBS Project 71856.002

1325 SE TECH CENTER DR
SUITE 140
VANCOUVER, WA 98683
360.695.3488 MAIN
866.727.0140 FAX
PBSUSA.COM

Table of Contents

Executive Summary v
1 INTRODUCTION 1
1.1 Scope of Study 1
1.2 Existing Site Conditions 2
1.3 Existing Infrastructure 2
1.3.1 Land Uses 2
1.3.2 Existing Roadways 2
1.3.3 Major Intersections and Traffic Control 3
1.4 Traffic Volumes 4
1.4.1 Existing Traffic Volumes 4
1.4.2 Background Growth 5
1.4.3 In-Process Projects 5
1.4.4 Future Volumes 6
1.4.5 Traffic Volumes Findings 6
2 PROPOSED CONDITIONS 7
2.1 Project Description 7
2.2 Access and Circulation 7
2.3 Trip Generation and Distribution 7
2.3.1 Proposed Trip Generation 7
2.3.2 Proposed Trip Distribution 8
2.3.3 Proposed Trip Generation and Distribution for Farmstead 8
2.3.4 Future Volumes with Project 9
3 INTERSECTION OPERATIONS ANALYSES 10
3.1 Operations Description 10
3.2 Operation Standards 10
3.3 Analysis Methodology 10
3.4 Level of Service Analyses 11
3.4.1 2022 Existing Conditions 11
3.4.2 2025 Future Conditions Without Project 12
3.4.3 2025 Future Conditions With Project (Phase 1 of Huntsman's Estates) 13
3.4.4 2025 Future Conditions With Both Projects (Phase 1 of Both Estates) 14
3.4.5 2028 Future Conditions Without Project 15
3.4.6 2028 Future Conditions With Project (All Phases of Huntsman's Estates) 16
3.4.7 2028 Future Conditions With Both Projects (All Phases of Both Estates) 17
3.4.8 2033 Future Conditions Without Project 18
3.4.9 2033 Future Conditions With Project (All Phases of Huntsman's Estates) 18
3.4.10 2033 Future Conditions With Both Projects (All Phases of Both Estates) 19
3.5 Intersection Mitigation 21
3.5.1 SR 124 / US Highway 12 WB Ramps Intersection 21
3.5.2 SR 124 and 5th Avenue / Gateway Road and US Highway 12 EB Ramps Intersection 21
3.5.3 5th Avenue / Jantz Road Intersection 22
3.5.4 Jantz Road and Ray Boulevard / Humorist Road Intersection 22
3.5.5 US Highway 12 / Hanson Loop Road Intersection 22

3.5.6 Mitigation Results and Next Steps 23
3.6 Sensitivity Analysis 26
4 SAFETY ANALYSIS 29
4.1 Collision Analysis 29
4.2 Pedestrian, Bicycle, and Public Transportation Facilities 30
4.3 Sight Distance at Site Access Locations 30
5 STUDY FINDINGS 32
5.1 Present Traffic Volumes 32
5.2 In-Process Projects 32
5.3 Future Traffic Volumes 32
5.4 Trip Generation 32
5.5 Access and Circulation 32
5.6 Intersection Performance 32
5.7 Intersection Mitigation 33
5.8 Sensitivity Analysis 33
5.9 Collision Analysis 33
5.10 Pedestrian, Bicycle Facilities, and Public Transportation 33
5.11 Sight Distance at Site Access Locations 34
6 RECOMMENDATIONS 35
6.1 Sensitivity Analysis 35
6.2 Intersection Mitigation for Full Buildout 35
6.3 Intersection Mitigation Shared with Port of Walla Walla 35
6.4 Collision Analysis 36
6.5 Pedestrian, Bicycle, and Public Transportation Facilities 36
6.6 Sight Distance at Site Access Location 36
7 REFERENCES 37

Supporting Data

TABLES

Table 1. Land Uses Around the Site
Table 2. Existing Roadway Information
Table 3. Major Intersections: Existing Lanes and Traffic Controls
Table 4. New Trip Generation for Huntsman's Estates
Table 5. Estimated 2022 Level of Service for Existing Conditions
Table 6. Estimated 2025 Level of Service Without Project Conditions
Table 7. Estimated 2025 Level of Service With Project Conditions (Phase 1 of Huntsman's Estates)
Table 8. Estimated 2025 Level of Service With Both Projects Conditions (Phase 1 of Both Estates)
Table 9. Estimated 2028 Level of Service Without Project Conditions
Table 10. Estimated 2028 Level of Service With Project Conditions (All Phases of Huntsman's Estates)
Table 11. Estimated 2028 Level of Service With Both Projects Conditions (All Phases of Both Estates)
Table 12. Estimated 2033 Level of Service Without Project Conditions
Table 13. Estimated 2033 Level of Service With Project Conditions (All Phases of Huntsman's Estates)
Table 14. Estimated 2033 Level of Service With Both Projects Conditions (All Phases of Both Estates)
Table 15. Estimated 2033 Mitigated Level of Service With Both Projects Conditions
Table 16. Estimated 2025 Level of Service with Both Projects Conditions (Phase 1 of Both Estates), 40% BBP Trips, and Amended BBP BSP
Table 17. 2025 LOS With 500 Dwelling Units, 40% BBP Trips, and Amended BBP BSP
Table 18. Collision Analysis for Study Area Intersections (January 1, 2016, through December 31, 2020)

FIGURES

Figure 1. Vicinity Map
Figure 2. Site Plan
Figure 3. Existing Lane Configuration and Traffic Control
Figure 4. 2022 Existing Volumes
Figure 5. 2025 In-Process Trips and Pass-By Trips
Figure 6. 2025 Without Project Volumes
Figure 7. Trip Distribution and Assignment (Phase 1 of Huntsman's Estates)
Figure 8. 2025 With Project Volumes (Phase 1 of Huntsman's Estates)
Figure 9. Trip Distribution and Assignment (Phase 1 of Farmstead)
Figure 10. 2025 With Both Project Volumes (Phase 1 of Huntsman's Estates and Farmstead)
Figure 11. 2028 In-Process Trips and Pass-By Trips
Figure 12. 2028 Without Project Volumes
Figure 13. Trip Distribution and Assignment (Phases 1 and 2 of Huntsman's Estates)
Figure 14. 2028 With Project Volumes (Phases 1 and 2 of Huntsman's Estates)
Figure 15. Trip Distribution and Assignment (Phase 1 and 2 of Farmstead)
Figure 16. 2028 With Both Project Volumes (Phase 1 and 2 of Huntsman's Estates and Farmstead)
Figure 17. 2033 In-Process Trips and Pass-By Trips
Figure 18. 2033 Without Project Volumes
Figure 19. 2033 With Project Volumes (Phases 1 and 2 of Huntsman's Estates)
Figure 20. 2033 With Project Volumes (Phase 1 and 2 of Huntsman's Estates and Farmstead)

APPENDICES

Appendix A: Traffic Counts
Appendix B: In-Process Projects
Appendix C: Trip Generation Calculations and Trip Distribution
Appendix D: Level of Service Calculations
Appendix E: Intersection Mitigation Level of Service Calculations
Appendix F: Collision Rate Calculations and Data
Appendix G: Sensitivity Analysis Level of Service Calculations

©2022 PBS Engineering and Environmental Inc.

Executive Summary

Purpose and Scope

The Huntsman's Estates project proposes to construct a 484-lot subdivision of single-family residential housing in two phases within Burbank, Washington, an unincorporated urban community within Walla Walla County. Phase 1 of the development, with 248 dwelling units, is assumed to be complete by the end of 2025. Phase 2 of the development, with 236 dwelling units, is assumed to be complete by the end of 2028. The proposed development will have two accesses on Quincy Road. See Figure 2 for the site plan.

This report analyzes the traffic impacts generated by the completed development as required by Walla Walla County (County).

The following intersections were identified for analysis:

1. State Route (SR) 124 / US Highway 12 Westbound (WB) Ramps
2. SR 124 and 5th Avenue / Gateway Road and US Highway 12 Eastbound (EB) Ramps
3. 5th Avenue / Jantz Road
4. Jantz Road and Ray Boulevard / Humorist Road
5. Quincy Road / Hanson Loop Road (assumes Hanson Loop Road as the east-west roadway)
6. US Highway 12 / Hanson Loop Road (assumes Hanson Loop Road as the east-west roadway)
7. Quincy Road / Road B (site access; assumes Road B as the east-west roadway)
8. Quincy Road / Road C (site access; assumes Road C as the east-west roadway)

Findings

The findings of this traffic impact analysis (TIA) are listed below.

Present Traffic Volumes

All Traffic Data collected the data on January 20, 2022, a date with a typical school schedule, at the following intersections:

- SR 124 / US Highway 12 Westbound Ramps
- SR 124 and 5th Avenue / Gateway Road and US Highway 12 Eastbound Ramps
- 5th Avenue / Jantz Road
- Jantz Road and Ray Boulevard / Humorist Road
- Quincy Road / Hanson Loop Road
- US Highway 12 / Hanson Loop Road
- Quincy Road / South Drive (South Drive exists as a gravel roadway)
- Hanson Loop Road / Red Lane (Red Lane exists as a driveway that serves two lots)

Turning movement counts (TMCs) at the Quincy Road / South Drive were used to estimate the northbound and southbound through trips past the future Road B and Road C site accesses. The Quincy Road / South Drive intersection exists as a gravel road 250 feet northwest of the site.

In-Process Projects

The Burbank Business Park (BBP), a project by the Port of Burbank, was identified for inclusion in this TIA.

The Farmstead development, a proposed project adjacent to the Huntsman's Estates development, is evaluated in parallel with Huntsman's Estates to identify the projects' individual and combined impacts.

Future Traffic Volumes

An annually compounded background growth rate of 2% was applied to intersection movements between public roadways. This rate was calculated based on the Benton-Franklin Council of Governments' (BFCG) 2025 model link volumes and 2045 future model link volumes.

Trip Generation

When fully built out and occupied in 2028, the Huntsman's Estates development is anticipated to generate 4,305 vehicle trips on a typical weekday, including 313 trips during the AM peak hour and 438 trips during the PM peak hour.

Access and Circulation

The distribution of site trips to the access intersection was based on the lots with the shortest path to either Quincy Road or Hanson Loop Road. The site trips will be distributed from the site with 82% using Road B (northern driveway) and 18% using Road C (southern driveway).

Intersection Performance

- All studied intersections currently operate at an acceptable level of service (LOS) during the weekday AM and PM peak hours.
- Six out of the eight studied intersections operate at an acceptable LOS during the 2025 With Both Projects (Phase 1 of Both Estates) conditions during the AM and PM peak hours.
- Three out of the eight studied intersections operate at an acceptable LOS during the 2028 and 2033 With Both Projects (All Phases of Both Estates) conditions during the AM and PM peak hours.
- The SR 124 / US Highway 12 WB Ramps intersection operates below the acceptable LOS during the 2028 and 2033 With Both Projects (All Phases of Both Estates) conditions during the peak hour.
- The SR 124 and 5th Avenue / Gateway Road and US Highway 12 EB Ramps intersection operates below the acceptable LOS during the 2028 and 2033 With Both Projects (All Phases of Both Estates) conditions during the AM and PM peak hours.
- The 5th Avenue / Jantz Road intersection operates below the acceptable LOS during the 2025, 2028, and 2033 With Both Projects (All Phases of Both Estates) conditions during the AM and PM peak hours.
- The US Highway 12 / Hanson Loop Road intersection operates below the acceptable LOS during the 2025, 2028, and 2033 With Both Projects (All Phases of Both Estates) conditions during the PM peak hour. The Huntsman's Estates and Farmstead projects do not contribute trips to the failing movement at the US Highway 12 / Hanson Loop Road intersection.
- WSDOT should monitor growth at the SR 124 and 5th Avenue / Gateway Road and US Highway 12 EB Ramps and US Highway 12 / Hanson Loop Road intersections to ensure the intersections operate at an acceptable LOS and v/c ratio.

Intersection Mitigation

- A continuous southbound right-turn lane at the SR 124 / US Highway 12 WB Ramps intersection will bring the intersection to operate at an acceptable LOS in the 2033 PM With Both Projects conditions.

- A two-lane roundabout and two circulating roundabout lanes at the SR 124 and 5th Avenue / Gateway Road and US Highway 12 EB Ramps intersection will bring the intersection to operate at an acceptable LOS in the 2033 With Both Projects conditions in the AM and PM peak hours.
- Changing the intersection control at the Jantz Road and Ray Boulevard / Humorist Road intersection to allow for northbound and southbound free-flowing movement with the east and west legs stop-controlled will bring the intersection to operate at an acceptable LOS in the 2033 With Both Projects conditions during the AM and PM peak hours.
- Widening the eastbound approach at the US Highway 12 / Hanson Loop Road intersection to provide an exclusive eastbound right-turn lane will mitigate the impacts generated by the Huntsman's Estates project.

Sensitivity Analysis
Up to 500 dwelling units can be built out at the Huntsman's Estates and Farmstead projects until the 5th Avenue / Jantz Road intersection operates below the acceptable LOS in the 2025 With Project PM peak hour conditions. This finding relies upon the amended BBP BSP and a 1% annual background growth rate.

WSDOT should monitor growth at the US Highway 12 / Hanson Loop Road intersections to ensure the intersection operates at an acceptable LOS and v/c ratio.

Collision Analysis
The collision rate is below the critical collision rate at all the studied intersections. A pattern of object collisions at the SR 124 / US Highway 12 Westbound Ramps intersection is notable.

Pedestrian, Bicycle Facilities, and Public Transportation
Pedestrian, bicycle, and transit facilities are not readily available for future subdivision residents in the study area. A gap of approximately 0.75 mile exists between the Huntsman's Estates site and the nearest improved pedestrian facilities. It is likely that students living within Huntsman's Estates will be offered school bus transportation.

Sight Distance at Site Access Locations
Review of the current conditions along Quincy Road and Hanson Loop Road suggests that adequate intersection sight distance (ISD) is available.

Recommendations
This traffic impact analysis supports the following recommendations.

Sensitivity Analysis
Negotiate an equitable cost-sharing arrangement between the Huntsman's Estates developer and the Farmstead developer to achieve the following mitigations to which both parties' projects contribute.

- At the US Highway 12 / Hanson Loop Road intersection, widen the eastbound approach to provide a shared left-through lane and an exclusive right-turn lane.
- The County should approve 500 dwelling units (combined) for the Farmstead Estates and Huntsman Estates projects. The developers may determine the equitable division of the 500 dwelling units; PBS suggests they could be split equally between the projects, with 250 units for each. Additional traffic mitigation should be evaluated and approved before more than 500 dwelling units are approved.

Intersection Mitigation for Full Buildout

Negotiate an equitable cost-sharing arrangement between the Huntsman's Estates developer and the Farmstead developer to achieve the following mitigation to which both parties' projects contribute. This mitigation would apply after more than 500 dwelling units are permitted.

- At the Jantz Road and Ray Boulevard / Humorist Road intersection:
    - Reassign the stop-control to the eastbound and westbound movements.
    - Add high-visibility crosswalk features to both existing marked crosswalks.
    - Install rectangular rapid-flashing beacons (RRFB) alongside the crosswalk of the north leg to alert approaching drivers of pedestrians in the crosswalk.
    - Address site distance at the northwest and southeast corners.

Intersection Mitigation Shared with the Port of Walla Walla

Negotiate an equitable cost-sharing arrangement among the Huntsman's Estates developer, the Port of Walla Walla, and the Farmstead developer to achieve the following mitigations to which all three parties' projects contribute. These mitigations would apply after more than 500 dwelling units are permitted.

- At the SR 124 / US Highway 12 WB Ramps intersection:
    - Construct a westbound receiving lane departing the intersection to the US Highway 12 on-ramp.
    - Reconfigure the southbound right-turn movement to flow freely into the added lane, then to merge into the existing lane downstream before merging into the US Highway 12 mainline.
- At the SR 124 and 5th Avenue / Gateway Road and US Highway 12 EB Ramps intersection, consistent with the recommendation in the BBP TIA:
    - Expand the south leg roadway provide two travel lanes in each direction.
    - Designate the outer northbound approach lane exclusively for right turns to the eastbound US Highway 12 on-ramp.
    - Expand the roundabout to provide two circulating lanes.
    - Reconfigure the westbound approach to allow left turns from both approach lanes.
- At the 5th Avenue / Jantz Road intersection, consistent with the recommendation in the BBP TIA:
    - Install a traffic signal with an exclusive southbound left-turn lane and a westbound right-turn lane with a receiving lane.

Collision Analysis

WSDOT should evaluate the intersection conditions and install advisory speed signage for all approaches at the SR 124 / US Highway 12 Westbound Ramps intersection.

Pedestrian, Bicycle, and Public Transportation Facilities

Construct standard frontage improvements, including sidewalks, along Quincy Road. Assure all driveways, sidewalks, crosswalks, and curb ramps constructed with the subdivision project comply with current Americans with Disabilities Act guidelines.

Sight Distance at Site Access Location

Design the proposed site access intersections in accordance with American Association of State Highway and Transportation Officials guidelines for ISD based on the posted speed of the primary roadway. Install no objects within the sight distance triangles that would block exiting drivers' view of approaching traffic.

1 INTRODUCTION

The purpose of this study is to determine the impacts of the traffic generated by the Huntsman's Estates project on the surrounding roadway infrastructure. The project site is shown on the vicinity map (Figure 1). This study will determine if mitigation is required to keep the roadways operating safely and at capacity levels acceptable under the current level of service standards. This report documents the findings and conclusions of a traffic impact analysis (TIA) conducted for the proposed site plan (Figure 2) application for property located in Burbank, Washington, an unincorporated urban community within Walla Walla County.

1.1 Scope of Study

This study documents the existing and proposed conditions, traffic data, safety analysis, and intersection operations in accordance with the guidelines of Walla Walla County (County) and of the Washington State Department of Transportation (WSDOT) where applicable.

The following intersections were identified for analysis:

1. State Route (SR) 124 / US Highway 12 Westbound (WB) Ramps
2. SR 124 and 5th Avenue / Gateway Road and US Highway 12 Eastbound (EB) Ramps
3. 5th Avenue / Jantz Road
4. Jantz Road and Ray Boulevard / Humorist Road
5. Quincy Road / Hanson Loop Road (assumes Hanson Loop Road as the east-west roadway)
6. US Highway 12 / Hanson Loop Road (assumes Hanson Loop Road as the east-west roadway)
7. Quincy Road / Road B (site access; assumes Road B as the east-west roadway)
8. Quincy Road / Road C (site access; assumes Road C as the east-west roadway)

PBS evaluated the adjacent Farmstead development within this TIA report to look at conditions with both the projects (Huntsman's Estates and Farmstead). This TIA includes analysis of future background conditions based on an annually compounded growth rate and the addition of traffic from the Burbank Business Park in-process project. These background conditions are addressed later in this TIA.

This TIA is prepared for submission to the County. The traffic-related issues addressed in this report are based on the County's *Traffic Impact Analysis Guidelines* (see References) and the scope of work letter dated December 10, 2021, that was reviewed by County staff. The topics include:

- Baseline traffic conditions, including existing counts, one in-process project, and background growth
- Proposed site-generated traffic volumes and their distribution
- Capacity analysis of the existing and future conditions during the weekday AM and PM peak hours for the following scenarios:
    - 2022 Existing Conditions
    - 2025 Without Project
    - 2025 With Project (Phase 1 of Huntsman's Estates)
    - 2025 With Both Projects (Phase 1 of Huntsman's Estates and Farmstead)
    - 2028 Without Project
    - 2028 With Project (Phases 1 and 2 of Huntsman's Estates)
    - 2028 With Both Projects (Phases 1 and 2 of Huntsman's Estates and Farmstead)
    - 2033 (Horizon Year) Without Project
    - 2033 (Horizon Year) With Project (Phases 1 and 2 of Huntsman's Estates)
    - 2033 (Horizon Year) With Both Projects (Phases 1 and 2 of Huntsman's Estates and Farmstead)

- Safety analysis of the existing and future conditions
- Recommendations for mitigation of traffic impacts and conclusion
- Sensitivity analysis to provide the point at which both Huntsman's Estates and Farmstead will cause the study intersections to operate below standards

1.2 Existing Site Conditions

The site, which is identified with parcel number 310807510026, is located in Burbank, Washington, an unincorporated urban community within the County. The site is currently undeveloped and was previously used for agricultural purposes. The site is zoned BR (Burbank Residential).

1.3 Existing Infrastructure

The existing infrastructure and operational traffic conditions in the study area were documented. Roadway conditions were studied to confirm that the roadways are currently operating in a safe and efficient manner.

1.3.1 Land Uses

The land uses surrounding the site are documented to help identify the site location and to provide reference for any discussion of conditions that might impact the adjacent properties. The land uses surrounding the site are shown in Table 1.

Table 1. Land Uses Around the Site

North of Site	
Zoning	BR
Description	Burbank Residential
Existing Use	Undeveloped

West of Site	
Zoning	BR
Description	Burbank Residential
Existing Use	Undeveloped

S I T E

East of Site (across US Highway 12)	
Zoning	BR
Description	Burbank Residential
Existing Use	Residential Housing

South of Site	
Zoning	RA
Description	Rural Agriculture
Existing Use	Undeveloped

1.3.2 Existing Roadways

The existing collector roadway providing access to the site is Quincy Road. Data were gathered on this and other roadways in the study area to inform operations analysis of the existing roadway system. The pertinent information regarding the study area roadways is tabulated in Table 2.

Table 2. Existing Roadway Information

Roadway Name	Classification	Speed Limit[b]	Lane Configuration		
			Lanes	Sidewalks	Bike Lanes
US Highway 12	Urban/Rural[c] Other Freeways / Expressways	60	4	No	No
SR 124	Urban Other Principal Arterial	40	2	No	No
Gateway Road	Minor Arterial	25	2	No	No
5th Avenue	Major Collector	25	2	Yes	No
Jantz Road	Local Access	35	2	Partial	No
Ray Boulevard	Local Access	25	2	No	No
Humorist Road	Minor Arterial	25	2	Partial	No
Quincy Road	Local Access	35	2	No	No
Hanson Loop Road	Major Collector / Minor Collector[a]	35	2	No	No

[a] The Hanson Loop Road classification is major collector south of Humorist Road within the Burbank urban growth area (UGA) and minor collector outside the Burbank UGA, beginning approximately 0.45 mile south of Harrison Place.
[b] Stated in miles per hour (mph).
[c] The US Highway 12 classification is urban within the Burbank UGA, including at the SR 124 interchange, and rural outside Burbank UGA, including at the Hanson Loop Road intersection.

1.3.3 Major Intersections and Traffic Control

The existing lane geometrics and traffic controls at the study intersections were documented as relevant to the intersection operations analysis below in this TIA. Table 3 summarizes the existing intersection configurations.

Table 3. Major Intersections: Existing Lanes and Traffic Controls

Intersection	**SR 124 / US Highway 12 WB Ramps**			
Leg	**NB**	**SB**	**WB**	**EB**
Control	Unc.	Yield	Yield	NA
Number of Lanes	1	2	1	NA

Intersection	**SR 124 and 5th Avenue / Gateway Road and US Highway 12 EB Ramps**			
Leg	**NB**	**SB**	**WB**	**EB**
Control	Yield	Yield	Yield	Yield
Number of Lanes	1	1	2	1

Intersection	**5th Avenue / Jantz Road**			
Leg	**NB**	**SB**	**WB**	**EB**
Control	Unc.	Unc.	Stop	NA
Number of Lanes	1	1	1	NA

Intersection	Jantz Road and Ray Boulevard / Humorist Road			
Leg	**NB**	**SB**	**WB**	**EB**
Control	Stop	Stop	Unc.	Unc.
Number of Lanes	1	1	1	1

Intersection	Quincy Road / Hanson Loop Road			
Leg	**NB**	**SB**	**WB**	**EB**
Control	Stop	Stop	Unc.	Unc.
Number of Lanes	1	1	1	1

Intersection	US Highway 12 / Hanson Loop Road			
Leg	**NB**	**SB**	**WB**	**EB**
Control	Unc.	Unc.	Stop	Stop
Number of Lanes	4	4	1	1

Stop = Stop-controlled leg approaching intersection
Unc. = Uncontrolled leg approaching intersection – does not stop or yield
Yield = Yield-controlled leg approaching roundabout intersection

The project area is defined as the vicinity of the site encompassed by the study intersections. The operation of the intersections can be controlled by signing, roundabouts, or signalization. Table 3 refers to the type of control and number of approach lanes for each leg of each intersection. The existing lane configurations and traffic controls for all existing intersections, as well as the proposed configurations for all proposed access intersections, are shown in Figure 3.

1.4 Traffic Volumes

1.4.1 Existing Traffic Volumes

Turning movement counts (TMCs) were gathered for the weekday AM peak period (7:00–9:00 am) and the weekday PM peak period (4:00–6:00 pm). PBS retained All Traffic Data (ATD) to gather the counts. ATD collected the data on January 20, 2022, a date that had a typical school schedule, at the following intersections. Copies of the count data used are provided in Appendix A.

- SR 124 / US Highway 12 WB Ramps
- SR 124 and 5th Avenue / Gateway Road and US Highway 12 EB Ramps
- 5th Avenue / Jantz Road
- Jantz Road and Ray Boulevard / Humorist Road
- Quincy Road / Hanson Loop Road
- US Highway 12 / Hanson Loop Road
- Quincy Road / South Drive (South Drive exists as a gravel roadway)

TMCs at the Quincy Road / South Drive were used to estimate the northbound and southbound through trips past the future Road B and Road C site accesses. The Quincy Road / South Drive intersection exists as a gravel road 250 feet northeast of the site.

The resulting existing peak hour volumes for the studied intersections are shown in Figure 4. These volumes were input to the intersection operations analyses addressed later in this TIA.

1.4.2 Background Growth

Background growth is a generic increase in traffic volumes that either is not attributable to specific developments or is attributable to influences outside the study area. An annually compounded background growth rate of 2% was applied to intersection movements between public roadways. This rate was calculated based on the Benton-Franklin Council of Governments' (BFCG) 2025 and 2045 model link volumes along US Highway 12. The BFCG link volumes and detailed calculations are provided in Appendix A.

Of note, the BFCG model volumes suggested a near-zero growth rate off the highway and within the Burbank community, suggesting that applying a 2% growth rate to the local roadways overestimates the future volumes. By comparison, the Burbank Business Park TIA (discussed below in the In-Process Projects section) applied a 1% growth rate.

1.4.3 In-Process Projects

In-process trips from approved projects were requested from the County, and the Burbank Business Park (BBP) in-process project was supplied for inclusion in this TIA. The BBP TIA was prepared by Transpo Group in April 2013 for the Port of Walla Walla (Port); excerpts are provided in Appendix B. The following land uses were proposed as part of the BBP development:

- Approximately 53 acres of industrial land use
- Approximately 186,200 gross square feet (gsf) of retail land use (on 17 acres)
- Approximately 434,400 gsf of business park land use (on 40 acres)

PBS reviewed aerial imagery (Google Earth Pro software, version 7.3.4.8642) dated April 14, 2021, and found that only a portion of the BBP has been developed. Here is the approximate percentage of undeveloped land area by land use:

- 95% of industrial land use
- 63% of retail land use
- 100% of business park land use

To estimate the number of remaining in-process trips that could be generated by the undeveloped area of the BBP project, PBS extrapolated the proposed trip generation for the entire development based on the remaining undeveloped land area. The remaining undeveloped area is assumed to be built out linearly until full build-out in 2033, so the trips generated by the undeveloped area were added linearly to the baseline traffic. The in-process trips for the studied intersections are summarized on Figures 5, 11, and 17. Detailed calculations of the BBP trip accounting are provided in Appendix B.

The BBP TIA addressed operational deficiencies at the SR 124 and 5th Avenue / Gateway Road and US Highway 12 EB Ramps intersection and the 5th Street / Jantz Road intersection. Since their timing is unknown, the intersection improvements recommended in the BBP TIA were not included in the scenarios evaluated within the Level of Service Analyses section of this Huntsman's Estates TIA for consistency. However, the improvements are discussed and addressed in the Intersection Mitigation section of this TIA. Details of the Intersection Mitigation improvements recommended in the BBP TIA are provided in Appendix B.

Amendments to the binding site plan (BSP) for the BBP were adopted recently, and PBS learned of the amendments after preparing the Level of Service Analyses. Therefore, the BBP BSP amendments are addressed in the Sensitivity Analysis section below.

1.4.4 Future Volumes

The baseline volumes for 2025 intersection operations analyses, termed the 2025 Without Project volumes, represent the sum of 2022 existing traffic, in-process project volumes, and 3 years of background growth. Figure 6 presents the 2025 Without Project volumes for the weekday AM and PM peak hours.

The baseline volumes for 2028 intersection operations analyses, termed the 2028 Without Project volumes, represent the sum of 2022 existing traffic, in-process project volumes, and 6 years of background growth. Figure 12 presents the 2028 Without Project volumes for the weekday AM and PM peak hours.

The baseline volumes for 2033 intersection operations analysis, termed the 2033 Without Project volumes, represent the sum of 2022 existing traffic, in-process project volumes, and 11 years of background growth. Figure 18 presents the 2033 Without Project volumes for the weekday AM and PM peak hours.

1.4.5 Traffic Volumes Findings

Traffic volumes in the study area will continue to increase without or with the project. Trips from the undeveloped area of the BBP development were included in this analysis.

Background growth (at 2% for 3 years) was estimated to add approximately 6.1% to the 2022 existing volumes to estimate 2025 Without Project volumes.

Background growth (at 2% for 6 years) was estimated to add approximately 12.6% to the 2022 existing volumes to estimate 2028 Without Project volumes.

Background growth (at 2% for 11 years) was estimated to add approximately 24.3% to the 2022 existing volumes to estimate 2033 Without Project volumes.

2 PROPOSED CONDITIONS

The proposed development will add traffic to the roadway system. Where the project is located, the size of the project, and when it will be completed are all important elements that need to be considered to determine the impacts of this development on safety and capacity. It is also important to examine how the project will operate with the existing transportation system, estimate how much new traffic it will generate, and predict where traffic generated by the site will be distributed. Furthermore, this section will address any funded infrastructure changes planned by other agencies or developers. All of these elements are important in assessing the traffic impacts of this project.

2.1 Project Description

The Huntsman's project proposes to construct 484 dwelling units of single-family detached housing on approximately 120 acres. The site is currently vacant and zoned BR (Burbank Residential). The developer plans on constructing approximately 50 dwelling unit per year starting from Quincy Road and progressing toward Hanson Loop Road. For the purposes of this TIA, the development is assumed to occur in two phases and is anticipated to be fully constructed and occupied by 2028. Phase 1 is assumed to include 248 dwelling units by 2025, and Phase 2 is assumed to include the remaining 236 dwelling units by 2028 for a total of 484 dwelling units. The project proposes two accesses on Quincy Road. See Figure 2 for site plan.

The Farmstead development, located adjacent to the north of the Huntsman's Estates site, may propose interconnecting roadways between the two properties. This may result in a reduced number of Huntsman's Estates dwelling units along the north property line to provide right-of-way for connecting streets. For the purposes of this TIA, and as a conservative approach, the total proposed 484 dwelling units of single-family detached housing was used in this analysis.

2.2 Access and Circulation

Quincy Road is the main access proposed for this project. Vehicles will access Quincy Road via Road B and Road C, as shown on the site plan on Figure 2.

The Farmstead development, located adjacent to the north of the Huntsman's Estates site, may propose interconnecting roadways between the two properties. This may result in some trips from Huntsman's Estates accessing Quincy Road via Farmstead and its proposed site accesses. For the purposes of this TIA, and as a conservative approach, all Huntsman's Estates site trips are assumed to use only the two site accesses proposed with the Huntsman's Estates site.

Finding: The proposed Huntsman's Estates development will have two accesses (Road B and Road C) on Quincy Road.

2.3 Trip Generation and Distribution

The following sections rely on data provided in the Institute of Transportation Engineers' (ITE) *Trip Generation Manual* (see References section). Detailed trip generation calculations are provided in Appendix C.

2.3.1 Proposed Trip Generation

The Burbank roadway network will see some increase in traffic volume from the proposed Huntsman's Estates project. The weekday trip generation values are based on the ITE regression equations, and the independent variable is the number of dwelling units of single-family detached housing (ITE 210). The trips generated by the project were estimated by calculating the trips for 484 dwelling units at the site's full build-out. Table 4 presents the trip generation estimates.

Table 4. New Trip Generation for Huntsman's Estates

Phases	Phase 1		Phase 2		Total, All Phases	
Land Use (ITE Code)	Single-Family Dwelling (210)				Single-Family Dwelling (210)	
Independent Variable	Dwelling Units				Dwelling Units	
Size	248		236		484	
Average Weekday Trips (ADT)	2,152		2,153		4,305	
Peak Hour Trips	**AM**	**PM**	**AM**	**PM**	**AM**	**PM**
In	41	141	40	135	81	276
Out	119	83	113	79	232	162
Total Trips	160	224	153	214	313	438

Finding: When fully built out and occupied in 2028, the Huntsman's Estates development is anticipated to generate 4,305 vehicle trips on a typical weekday, including 313 trips during the AM peak hour and 438 trips during the PM peak hour.

2.3.2 Proposed Trip Distribution

The proposed distribution of primary trips is based on the BFCG select zone distribution model, with values rounded to the nearest 5%. Copies of the transportation model outputs are provided in Appendix C.

Trip distribution and trip generation are applied together to assign trips to access points and the studied intersections. Site-generated trips are estimated to distribute as follows:

- 85% to and from US Highway 12, northwest of SR 124
- 5% to and from SR 124, northeast of US Highway 12
- 5% to and from Maple Street, west of Jantz Road
- 5% to and from US Highway 12, southeast of Hanson Loop Road

The distribution pattern above represents an external distribution of Huntsman's Estates trips entering and exiting the study area. The distribution and assignment of new trips to and from the project are shown on Figures 7 and 13.

The proposed site was reviewed to estimate the route preference to and from the site. The distribution of site trips to the access intersection was based on the lots with the shortest path to either Quincy Road or Hanson Loop Road. The site trips will be distributed from the site with 82% using Road B (northern driveway) and 18% using Road C (southern driveway). A copy of the internal site trip distribution to the access intersections is provided in Appendix C.

2.3.3 Proposed Trip Generation and Distribution for Farmstead

For the Farmstead project, the weekday peak hour trip generation values are based on the ITE land use for single-family detached housing (ITE 210). The ITE regression equations are applied, and the independent variable is the number of dwelling units. The trips generated by the project were estimated by the calculating the trips for 443 dwelling units at the site's full build-out. Farmstead is anticipated to generate 3,398 vehicle trips during a typical weekday, including 289 during the AM peak hour and 403 during the PM peak hour.

The proposed distribution of new (primary) trips at Farmstead is based on the BFCG select zone distribution model, with values rounded to the nearest 5%, similar to the Huntsman's Estates project. See the Proposed Trip Distribution section for details. The distribution and assignment of the new trips at the Farmstead are shown on Figures 9 and 15.

The Farmstead project proposes three accesses to the public roadway system: North Drive and South Drive will access Quincy Road. The Farmstead site trips are distributed from the site with 70% using North Drive, 24% using South Drive, and 6% using Hanson Loop Road. A copy of the internal site trip distribution to the access intersections is provided in Appendix C.

2.3.4 Future Volumes with Project

Figure 8 presents the 2025 With Project volumes for Phase 1 of Huntsman's Estates, or the sum of Without Project volumes and the Phase 1 site-generated trips, for the weekday AM and PM peak hours.

Figure 10 presents the 2025 With Project volumes for Phase 1 of both Huntsman's Estates and Farmstead, or the sum of Without Project volumes and the Phase 1 site-generated trips for both projects, for the weekday AM and PM peak hours.

Figure 14 presents the 2028 With Project volumes for Phases 1 and 2 of Huntsman's Estates, or the sum of Without Project volumes and the Phases 1 and 2 site-generated trips, for the weekday AM and PM peak hours.

Figure 16 presents the 2028 With Project volumes for Phases 1 and 2 of both Huntsman's Estates and Farmstead, or the sum of Without Project volumes and the Phases 1 and 2 site-generated trips for both projects, for the weekday AM and PM peak hours.

Figure 19 presents the 2033 With Project volumes for Phases 1 and 2 of Huntsman's Estates, or the sum of Without Project volumes and the Phases 1 and 2 site-generated trips, for the weekday AM and PM peak hours.

Figure 20 presents the 2033 With Project volumes for Phases 1 and 2 of both Huntsman's Estates and Farmstead, or the sum of Without Project volumes and the Phases 1 and 2 site-generated trips for both projects, for the weekday AM and PM peak hours.

3 INTERSECTION OPERATIONS ANALYSES

3.1 Operations Description

Traffic operations are assessed in terms of level of service (LOS), a concept developed by transportation engineers to qualify the level of operation of intersections and roadways (*Highway Capacity Manual*, see References). LOS measures are classified in grades "A" through "F," indicating a range of operation, with LOS "A" signifying the best level of operation and LOS "F" representing the worst level.

LOS is quantified in terms of average delay, expressed in seconds per vehicle. LOS "A" reflects full freedom of operation for a driver, while LOS "F" represents operational failure. At unsignalized intersections, the criteria are based on the theory of gap acceptance for the stop-controlled approaches. At signalized intersections, the criteria are based on driver behavior studies. LOS may be reported for individual lane groups, for an intersection approach (aggregating multiple lanes), or for an intersection as a whole (aggregating all entering vehicles).

The volume-to-capacity (v/c) ratio quantifies the portion of the theoretical capacity consumed by traffic demand volume. A v/c ratio of zero (0.00) reflects none of the capacity is consumed and all the capacity is fully available. A v/c ratio of one (1.00) reflects all the capacity is consumed and represents operational failure. The v/c ratio typically is calculated for individual movements or lane groups.

3.2 Operation Standards

The County's *Traffic Impact Analysis Guidelines* (see References) provide the following operation standards.

- LOS D as the minimum acceptable LOS for a signalized intersection, critical movement of an unsignalized intersection, or roadway segment within any urban area under the jurisdiction of Walla Walla County.
- In the urban area, an additional 10 second delay is the maximum allowed for any intersection currently operating at LOS D or lower.
- LOS C is the minimum acceptable LOS for any intersection or roadway segment within the rural areas of Walla Walla County.
- The LOS of any intersection or roadway segment may drop more than two levels of service, provided final level of service is not below the minimum acceptable LOS.

The LOS C standard applies to the Quincy Road / Hanson Loop Road intersection. At all the other studied intersections within County authority, the LOS D standard applies.

Within Walla Walla County, WSDOT has adopted LOS D as the minimum standard at intersections under state jurisdiction within urban areas and LOS C in rural areas (see References). The LOS C standard applies to the US Highway 12 / Hanson Loop Road intersection.

In addition, the WSDOT guidelines for roundabout analysis (see References) recommend the maximum v/c ratio for any approach lane be within a range of 0.85 to 0.90. This standard applies to the US Highway 12 ramp intersections.

3.3 Analysis Methodology

Traffic impacts were estimated to determine the extent of change in traffic conditions caused by the development of this project. In order to make this determination, PBS did the following:

- The individual peak hour volumes were analyzed for 2022, 2025, 2028, and 2033.

- The peak hour factor (PHF) for the overall intersection, as calculated from the count data, was applied all analysis scenarios. The PHF at the North Drive access was assumed to be 0.64 in the AM peak hour and 0.69 in the PM peak hour, similar to the PHF observed at the nearby Quincy Road / South Drive intersection.
- The heavy vehicle percentage (HV%) for each movement, as calculated from the count data, was applied for all analysis scenarios. A minimum of 2% was applied for all scenarios.
- Baseline traffic volumes on the surrounding street system were determined prior to adding the traffic impacts of the proposed project. This was done to establish a baseline for measuring the project impacts at the time of its development. Baseline traffic volume estimates were prepared for 2025, 2028, and 2033 Without Project conditions.
- As noted previously, trip generation estimates for the project were prepared for the weekday AM and PM peak hours on the surrounding street system.
- Cumulative traffic impacts of the proposed project were determined by superimposing the project-generated traffic onto the background weekday AM and PM peak traffic at all studied intersections. These volumes are termed the 2025, 2028, and 2033 With Project conditions.
- As noted previously, since their timing is unknown, the intersection improvements recommended in the Burbank Business Park TIA were not included in the analysis scenarios for consistency. The improvements are addressed in the Intersection Mitigation section below.
- The LOS for all signalized and stop-controlled intersections was calculated with Trafficware's Synchro software, Version 11, based on *Highway Capacity Manual* (HCM, see References) methodologies.
- The LOS for all roundabout intersections was calculated with Akcelik Associates' SIDRA Intersection software, Version 9, based on WSDOT-recommended settings (see References).
- Intersection results are reported differently depending on the control type.
    - Two-way stop-controlled intersection results report the critical movement LOS, delay, and v/c ratio.
    - All-way stop-controlled, roundabout, and signalized intersection results report the overall intersection LOS and delay as well as the critical lane v/c ratio.

LOS calculation reports for the study area intersections are provided in Appendix D. The key analysis findings are listed in the following tables.

3.4 Level of Service Analyses

3.4.1 2022 Existing Conditions

Table 5 describes the existing LOS for each intersection within the study area for the 2022 existing conditions during the weekday AM and PM peak hours.

Table 5. Estimated 2022 Level of Service for Existing Conditions

Int. #	INTERSECTION *(Critical lane group, AM / PM)*	LOS Standard	AM Peak Hour			PM Peak Hour		
			LOS	*Delay (sec/veh)*	*v/c*	*LOS*	*Delay (sec/veh)*	*v/c*
1	SR 124 / US Highway 12 WB Ramps *(NB / SB RT)*	v/c< 0.9	A	6.9	0.278	A	5.9	0.456
2	SR 124 and 5th Avenue / Gateway Road and US Highway 12 EB Ramps *(NB / WB)*	v/c< 0.9	A	4.9	0.240	A	5.1	0.298
3	5th Avenue / Jantz Road *(WB)*	D	B	10.1	0.172	B	10.1	0.126
4	Jantz Road and Ray Boulevard / Humorist Road *(NB)*	D	B	10.8	0.143	B	10.1	0.175
5	Quincy Road / Hanson Loop Road *(SB)*	C	A	8.9	0.017	A	9.2	0.020
6	US Highway 12 / Hanson Loop Road *(WB)*	C	B	11.9	0.043	C	23.7	0.044
7	Quincy Road / Road B	D	NA	NA	NA	NA	NA	NA
8	Quincy Road / Road C	D	NA	NA	NA	NA	NA	NA

NA = intersection does not yet exist

As shown in Table 5, all studied intersections currently operate at an acceptable LOS during the weekday AM and PM peak hours.

3.4.2 2025 Future Conditions Without Project

Table 6 describes the LOS for each intersection within the study area for the 2025 Without Project conditions during the weekday AM and PM peak hours.

Table 6. Estimated 2025 Level of Service Without Project Conditions

Int. #	INTERSECTION *(Critical lane group, AM / PM)*	LOS Standard	AM Peak Hour			PM Peak Hour		
			LOS	*Delay (sec/veh)*	*v/c*	*LOS*	*Delay (sec/veh)*	*v/c*
1	SR 124 / US Highway 12 WB Ramps *(NB / SB RT)*	v/c< 0.9	A	7.5	0.322	A	7.9	0.567
2	SR 124 and 5th Avenue / Gateway Road and US Highway 12 EB Ramps *(WB)*	v/c< 0.9	A	6.1	0.432	A	5.6	0.429
3	5th Avenue / Jantz Road *(EB)*	D	**E**	**35.9**	**0.021**	**E**	**36.0**	**0.141**

Int. #	INTERSECTION *(Critical lane group, AM / PM)*	LOS Standard	AM Peak Hour			PM Peak Hour		
			LOS	*Delay (sec/veh)*	*v/c*	*LOS*	*Delay (sec/veh)*	*v/c*
4	Jantz Road and Ray Boulevard / Humorist Road *(NB / SB)*	D	B	11.4	0.171	B	10.3	0.203
5	Quincy Road / Hanson Loop Road *(SB)*	C	A	8.9	0.017	A	9.2	0.021
6	US Highway 12 / Hanson Loop Road *(EB)*	C	B	13.1	0.052	**D**	**31.4**	**0.176**
7	Quincy Road / Road B	D	NA	NA	NA	NA	NA	NA
8	Quincy Road / Road C	D	NA	NA	NA	NA	NA	NA

NA = intersection does not yet exist

As shown in Table 6, six out of the eight studied intersections operate at an acceptable LOS during 2025 Without Project conditions during the AM and PM peak hours.

The 5th Avenue / Jantz Road (#3) intersection will operate at LOS E during the AM and PM peak hours, below the County LOS D standard. The US Highway 12 / Hanson Loop Road (#6) intersection will operate at LOS D during the PM peak hour, below the WSDOT LOS C standard. Mitigation alternatives for these intersections are discussed below in the Intersection Mitigation section.

3.4.3 2025 Future Conditions With Project (Phase 1 of Huntsman's Estates)

Table 7 describes the LOS for each intersection within the study area for the 2025 With Project (Phase 1 of Huntsman's Estates) conditions during the weekday AM and PM peak hours.

Table 7. Estimated 2025 Level of Service With Project Conditions (Phase 1 of Huntsman's Estates)

Int. #	INTERSECTION *(Critical lane group, AM / PM)*	LOS Standard	AM Peak Hour			PM Peak Hour		
			LOS	*Delay (sec/veh)*	*v/c*	*LOS*	*Delay (sec/veh)*	*v/c*
1	SR 124 / US Highway 12 WB Ramps *(NB / SB RT)*	v/c< 0.9	A	8.0	0.397	A	8.5	0.597
2	SR 124 and 5th Avenue / Gateway Road and US Highway 12 EB Ramps *(WB)*	v/c< 0.9	A	6.4	0.492	A	6.4	0.541
3	5th Avenue / Jantz Road *(EB)*	D	**F**	**57.5**	**0.035**	**F**	**85.3**	**0.303**
4	Jantz Road and Ray Boulevard / Humorist Road *(NB / SB)*	D	B	14	0.405	B	12.5	0.41

Int. #	INTERSECTION *(Critical lane group, AM / PM)*	LOS Standard	AM Peak Hour			PM Peak Hour		
			LOS	*Delay (sec/veh)*	*v/c*	*LOS*	*Delay (sec/veh)*	*v/c*
5	Quincy Road / Hanson Loop Road *(SB)*	C	A	9	0.025	A	9.3	0.027
6	US Highway 12 / Hanson Loop Road *(EB / WB)*	C	B	11.4	0.053	**D**	**32**	**0.062**
7	Quincy Road / Road B *(EB)*	D	A	9.8	0.161	B	10.3	0.137
8	Quincy Road / Road C *(EB)*	D	A	8.9	0.029	A	8.9	0.023

As shown in Table 7, six out of the eight studied intersections operate at an acceptable LOS during the 2025 With Project (Phase 1 of Huntsman Estates) conditions during the AM and PM peak hours.

The 5th Avenue / Jantz Road (#3) intersection will operate at LOS F during the AM and PM peak hours, below the County LOS D standard. The US Highway 12 / Hanson Loop Road (#6) intersection will operate at LOS D during the PM peak hour, below the WSDOT LOS C standard. Mitigation alternatives for these intersections are discussed below in the Intersection Mitigation section.

3.4.4 2025 Future Conditions With Both Projects (Phase 1 of Both Estates)

Table 8 describes the LOS for each intersection within the study area for the 2025 With Both Projects (Phase 1 of Both Estates) conditions during the weekday AM and PM peak hours.

Table 8. Estimated 2025 Level of Service With Both Projects Conditions (Phase 1 of Both Estates)

Int. #	INTERSECTION *(Critical lane group, AM / PM)*	LOS Standard	AM Peak Hour			PM Peak Hour		
			LOS	*Delay (sec/veh)*	*v/c*	*LOS*	*Delay (sec/veh)*	*v/c*
1	SR 124 / US Highway 12 WB Ramps *(NB / SB RT)*	v/c< 0.9	A	8.5	0.463	A	9.2	0.627
2	SR 124 and 5th Avenue / Gateway Road and US Highway 12 EB Ramps *(WB)*	v/c< 0.9	A	6.8	0.557	A	7.4	0.654
3	5th Avenue / Jantz Road *(EB)*	D	**F**	**96.0**	**0.059**	**F**	**245.9**	**0.637**
4	Jantz Road and Ray Boulevard / Humorist Road *(NB / SB)*	D	C	18.6	0.616	C	16.2	0.600
5	Quincy Road / Hanson Loop Road *(SB)*	C	A	9.0	0.032	A	9.3	0.032
6	US Highway 12 / Hanson Loop Road *(EB / WB)*	C	B	10.5	0.053	**D**	**32.9**	**0.064**

Int. #	INTERSECTION *(Critical lane group, AM / PM)*	LOS Standard	AM Peak Hour			PM Peak Hour		
			LOS	*Delay (sec/veh)*	*v/c*	*LOS*	*Delay (sec/veh)*	*v/c*
7	Quincy Road / Road B *(EB)*	D	A	9.9	0.164	B	10.3	0.137
8	Quincy Road / Road C *(EB)*	D	A	8.9	0.029	A	8.9	0.023

As shown in Table 8, six out of the eight studied intersections operate at an acceptable LOS during the 2025 With Both Projects (Phase 1 of Both Estates) conditions during the AM and PM peak hours.

The 5th Avenue / Jantz Road (#3) intersection will operate at LOS F during the AM and PM peak hours, below the County LOS D standard. The US Highway 12 / Hanson Loop Road (#6) intersection will operate at LOS D during the PM peak hour, below the WSDOT LOS C standard. Mitigation alternatives for these intersections are discussed below in the Intersection Mitigation section.

3.4.5 2028 Future Conditions Without Project

Table 9 describes the LOS for each intersection within the study area for the 2028 Without Project conditions during the weekday AM and PM peak hours.

Table 9. Estimated 2028 Level of Service Without Project Conditions

Int. #	INTERSECTION *(Critical lane group, AM / PM)*	LOS Standard	AM Peak Hour			PM Peak Hour		
			LOS	*Delay (sec/veh)*	*v/c*	*LOS*	*Delay (sec/veh)*	*v/c*
1	SR 124 / US Highway 12 WB Ramps *(NB / SB RT)*	v/c< 0.9	A	8.2	0.368	B	10.7	0.706
2	SR 124 and 5th Avenue / Gateway Road and US Highway 12 EB Ramps *(WB LT-TH / NB)*	v/c< 0.9	A	8.0	0.635	A	7.3	0.671
3	5th Avenue / Jantz Road *(EB)*	D	**F**	**109.1**	**0.224**	**F**	**378.4**	**1.124**
4	Jantz Road and Ray Boulevard / Humorist Road *(NB / SB)*	D	B	12.1	0.201	B	10.7	0.238
5	Quincy Road / Hanson Loop Road *(SB)*	C	A	9.0	0.018	A	9.3	0.022
6	US Highway 12 / Hanson Loop Road *(EB)*	C	B	14.3	0.064	**E**	**43.7**	**0.255**
7	Quincy Road / Road B	D	NA	NA	NA	NA	NA	NA
8	Quincy Road / Road C	D	NA	NA	NA	NA	NA	NA

NA = intersection does not yet exist

As shown in Table 9, six out of the eight studied intersections operate at an acceptable LOS during the 2028 Without Project conditions during the AM and PM peak hours.

The 5th Avenue / Jantz Road (#3) intersection will operate at LOS F during the AM and PM peak hours, below the County LOS D standard. The US Highway 12 / Hanson Loop Road (#6) intersection will operate at LOS E during the PM peak hour, below the WSDOT LOS C standard. Mitigation alternatives for these intersections are discussed below in the Intersection Mitigation section.

3.4.6 2028 Future Conditions With Project (All Phases of Huntsman's Estates)

Table 10 describes the LOS for each intersection within the study area for the 2028 With Project (All Phases of Huntsman's Estates) conditions during the weekday AM and PM peak hours.

Table 10. Estimated 2028 Level of Service With Project Conditions (All Phases of Huntsman's Estates)

Int. #	INTERSECTION *(Critical lane group, AM / PM)*	LOS Standard	AM Peak Hour			PM Peak Hour		
			LOS	*Delay (sec/veh)*	*v/c*	*LOS*	*Delay (sec/veh)*	*v/c*
1	SR 124 / US Highway 12 WB Ramps *(NB / SB-RT)*	v/c< 0.9	A	9.3	0.513	B	13.7	0.798
2	SR 124 and 5th Avenue / Gateway Road and US Highway 12 EB Ramps *(WB LT-TH)*	v/c< 0.9	B	13.0	0.892	**C**	**27.4**	**1.074**
3	5th Avenue / Jantz Road *(EB)*	D	**F**	**489.2**	**0.705**	**F**	**4286.7**	**7.416**
4	Jantz Road and Ray Boulevard / Humorist Road *(NB / SB)*	D	C	22.2	0.686	C	18.5	0.663
5	Quincy Road / Hanson Loop Road *(SB)*	C	A	9	0.035	A	9.3	0.032
6	US Highway 12 / Hanson Loop Road *(EB / WB)*	C	B	11.3	0.065	**E**	**39.3**	**0.088**
7	Quincy Road / Road B *(EB)*	D	B	11.5	0.33	B	13.2	0.318
8	Quincy Road / Road C *(EB)*	D	A	9.1	0.067	A	9.3	0.054

As shown in Table 10, five out of the eight studied intersections operate at an acceptable LOS during the 2028 With Project (All Phases of Huntsman's Estates) conditions during the AM and PM peak hours.

The SR 124 and 5th Avenue / Gateway Road and US Highway 12 EB Ramps (#2) intersection will operate with a v/c ratio of 1.020 during the PM peak hour, greater than the WSDOT-recommended maximum 0.9 v/c ratio for a roundabout approach. The 5th Avenue / Jantz Road (#3) intersection will operate at LOS F during the AM and PM peak hours, below the County LOS D standard. The US Highway 12 / Hanson Loop Road (#6) intersection will operate at LOS E during the PM peak hour, below the WSDOT LOS C standard. Mitigation alternatives for these intersections are discussed below in the Intersection Mitigation section.

3.4.7 2028 Future Conditions With Both Projects (All Phases of Both Estates)

Table 11 describes the LOS for each intersection within the study area for the 2028 With Both Projects (All Phases of Both Estates) conditions during the weekday AM and PM peak hours.

Table 11. Estimated 2028 Level of Service With Both Projects Conditions (All Phases of Both Estates)

Int. #	INTERSECTION *(Critical lane group, AM / PM)*	LOS Standard	AM Peak Hour			PM Peak Hour		
			LOS	*Delay (sec/veh)*	*v/c*	*LOS*	*Delay (sec/veh)*	*v/c*
1	SR 124 / US Highway 12 WB Ramps *(NB / SB-RT)*	v/c< 0.9	B	11.2	0.647	**C**	**20.2**	**0.914**
2	SR 124 and 5th Avenue / Gateway Road and US Highway 12 EB Ramps *(WB LT-TH)*	v/c< 0.9	**F**	**89.1**	**1.470**	**F**	**146.4**	**1.779**
3	5th Avenue / Jantz Road *(EB / WB)*	D	**F**	**2954.2**	**2.899**	**F**	**1232.2**	**3.649**
4	Jantz Road and Ray Boulevard / Humorist Road *(NB / SB)*	D	**F**	**94.8**	**1.112**	**F**	**71.5**	**1.053**
5	Quincy Road / Hanson Loop Road *(SB)*	C	A	9.1	0.049	A	9.4	0.042
6	US Highway 12 / Hanson Loop Road *(EB / WB)*	C	A	9.9	0.067	**E**	**43.3**	**0.097**
7	Quincy Road / Road B *(EB)*	D	B	11.8	0.339	B	13.6	0.33
8	Quincy Road / Road C *(EB)*	D	A	9.2	0.069	A	9.4	0.056

As shown in Table 11, three out of the eight studied intersections operate at an acceptable LOS during the 2028 With Project (All Phases of Both Estates) conditions during the AM and PM peak hours.

The SR 124 / US Highway 12 WB Ramps (#1) intersection will operate with a v/c ratio of 0.914 during the PM peak hour, greater than the WSDOT-recommended maximum 0.9 v/c ratio for a roundabout approach. The SR 124 and 5th Avenue / Gateway Road and US Highway 12 EB Ramps (#2) intersection will operate with v/c ratios of 1.470 and 1.779 during the AM and PM peak hours, respectively, greater than the WSDOT-recommended maximum 0.9 v/c ratio for a roundabout approach. The 5th Avenue / Jantz Road (#3) intersection will operate at LOS F during the AM and PM peak hours, below the County LOS D standard. The Jantz Road and Ray Boulevard / Humorist Road (#4) intersection will operate at LOS F during the AM and PM peak hours, below the County LOS D standard. The US Highway 12 / Hanson Loop Road (#6) intersection will operate at LOS E during the PM peak hour, below the WSDOT LOS C standard. Mitigation alternatives for these intersections are discussed below in the Intersection Mitigation section.

The LOS estimate assumes the BBP in-process project adds the west leg of the 5th Avenue / Jantz Road intersection. The LOS has been updated in the Sensitivity Analysis section 3.6.

3.4.8 2033 Future Conditions Without Project

Table 12 describes the LOS for each intersection within the study area for the 2033 Without Project conditions during the weekday AM and PM peak hours.

Table 12. Estimated 2033 Level of Service Without Project Conditions

Int. #	INTERSECTION *(Critical lane group, AM / PM)*	LOS Standard	AM Peak Hour			PM Peak Hour		
			LOS	*Delay (sec/veh)*	*v/c*	*LOS*	*Delay (sec/veh)*	*v/c*
1	SR 124 / US Highway 12 WB Ramps *(NB / SB RT)*	v/c< 0.9	A	9.2	0.428	**C**	**25.3**	**0.972**
2	SR 124 and 5th Avenue / Gateway Road and US Highway 12 EB Ramps *(SB / WB LT-TH)*	v/c< 0.9	**C**	**22.6**	**0.995**	**C**	**31.0**	**1.054**
3	5th Avenue / Jantz Road *(EB)*	D	**F**	**920.3**	**1.208**	**F**	**15384.6**	**27.528**
4	Jantz Road and Ray Boulevard / Humorist Road *(NB / SB)*	D	B	13.2	0.249	B	11.2	0.282
5	Quincy Road / Hanson Loop Road *(SB)*	C	A	9.0	0.020	A	9.3	0.023
6	US Highway 12 / Hanson Loop Road *(EB)*	C	C	16.8	0.087	**F**	**74.6**	**0.407**
7	Quincy Road / Road B *(EB)*	D	NA	NA	NA	NA	NA	NA
8	Quincy Road / Road C *(EB)*	D	NA	NA	NA	NA	NA	NA

NA = intersection does not yet exist

As shown in Table 12, four out of the eight studied intersections operate at an acceptable LOS during the 2033 Without Project conditions during the AM and PM peak hours.

The SR 124 / US Highway 12 WB Ramps (#1) intersection will operate with a v/c ratio of 0.972 during the PM peak hour, greater than the WSDOT-recommended maximum 0.9 v/c ratio for a roundabout approach. The SR 124 and 5th Avenue / Gateway Road and US Highway 12 EB Ramps (#2) intersection will operate with v/c ratios of 0.995 and 1.054 during the AM and PM peak hours, respectively, greater than the WSDOT-recommended maximum 0.9 v/c ratio for a roundabout approach. The 5th Avenue / Jantz Road (#3) intersection will operate at LOS F during the AM and PM peak hours, below the County LOS D standard. The US Highway 12 / Hanson Loop Road (#6) intersection will operate at LOS F during the PM peak hour, below the WSDOT LOS C standard. Mitigation alternatives for these intersections are discussed below in the Intersection Mitigation section.

3.4.9 2033 Future Conditions With Project (All Phases of Huntsman's Estates)

Table 13 describes the LOS for each intersection within the study area for the 2033 With Project (All Phases of Huntsman's Estates) conditions during the weekday AM and PM peak hours.

Table 13. Estimated 2033 Level of Service With Project Conditions (All Phases of Huntsman's Estates)

Int. #	INTERSECTION *(Critical lane group, AM / PM)*	LOS Standard	AM Peak Hour			PM Peak Hour		
			LOS	*Delay (sec/veh)*	*v/c*	*LOS*	*Delay (sec/veh)*	*v/c*
1	SR 124 / US Highway 12 WB Ramps *(NB / SB RT)*	v/c< 0.9	A	9.2	0.435	**D**	**54.4**	**1.164**
2	SR 124 and 5th Avenue / Gateway Road and US Highway 12 EB Ramps *(WB LT-TH)*	v/c< 0.9	**F**	**82.4**	**1.375**	**F**	**121.6**	**1.547**
3	5th Avenue / Jantz Road *(EB)*	D	**F**	**5489.7**	**6.173**	See table footnote		
4	Jantz Road and Ray Boulevard / Humorist Road *(NB / SB)*	D	D	29.2	0.774	C	21.5	0.724
5	Quincy Road / Hanson Loop Road *(SB)*	C	A	9	0.036	A	9.3	0.034
6	US Highway 12 / Hanson Loop Road *(EB / WB)*	C	B	13.3	0.088	**F**	**80.1**	**0.193**
7	Quincy Road / Road B *(EB)*	D	B	11.6	0.332	B	13.2	0.32
8	Quincy Road / Road C *(EB)*	D	A	9.1	0.068	A	9.3	0.055

The 5th Avenue / Jantz Road (#3) intersection LOS analysis does not provide the LOS during the PM peak hour due to excessive delay and over-capacity conditions. It is estimated that the eastbound LOS is F with the eastbound lane as the critical lane with delay over 2,000 seconds per vehicle.

As shown in Table 13, five out of the eight studied intersections operate at an acceptable LOS during the 2033 With Project (All Phases of Huntsman's Estates) conditions during the AM and PM peak hours.

The SR 124 / US Highway 12 WB Ramps (#1) intersection will operate with a v/c ratio of 1.145 during the PM peak hour, greater than the WSDOT-recommended maximum 0.9 v/c ratio for a roundabout approach. The SR 124 and 5th Avenue / Gateway Road and US Highway 12 EB Ramps (#2) intersection will operate with v/c ratios of 1.328 and 1.506 during the AM and PM peak hours, respectively, greater than the WSDOT-recommended maximum 0.9 v/c ratio for a roundabout approach. The 5th Avenue / Jantz Road (#3) intersection will operate at LOS F during the AM and PM peak hours, below the County LOS D standard. The US Highway 12 / Hanson Loop Road (#6) intersection will operate at LOS F during the PM peak hour, below the WSDOT LOS C standard. Mitigation alternatives for these intersections are discussed below in the Intersection Mitigation section.

3.4.10 2033 Future Conditions With Both Projects (All Phases of Both Estates)

Table 14 describes the LOS for each intersection within the study area for the 2033 With Both Projects (All Phases of Both Estates) conditions during the weekday AM and PM peak hours.

Table 14. Estimated 2033 Level of Service With Both Projects Conditions (All Phases of Both Estates)

Int. #	INTERSECTION *(Critical lane group, AM / PM)*	LOS Standard	AM Peak Hour			PM Peak Hour		
			LOS	*Delay (sec/veh)*	*v/c*	*LOS*	*Delay (sec/veh)*	*v/c*
1	SR 124 / US Highway 12 WB Ramps *(WB / SB RT)*	v/c< 0.9	B	17.1	0.765	**F**	**84.7**	**1.455**
2	SR 124 and 5th Avenue / Gateway Road and US Highway 12 EB Ramps *(WB LT-TH)*	v/c< 0.9	**F**	**238.5**	**2.265**	**F**	**229.7**	**2.022**
3	5th Avenue / Jantz Road *(EB)*	D	See table footnote					
4	Jantz Road and Ray Boulevard / Humorist Road *(NB / SB)*	D	**F**	**143.5**	**1.236**	**F**	**99.7**	**1.135**
5	Quincy Road / Hanson Loop Road *(SB)*	C	A	9.1	0.051	A	9.4	0.044
6	US Highway 12 / Hanson Loop Road *(EB / WB)*	C	B	11.4	0.088	**F**	**88.7**	**0.211**
7	Quincy Road / Road B *(EB)*	D	B	11.8	0.341	B	13.7	0.332
8	Quincy Road / Road C *(EB)*	D	A	9.2	0.069	A	9.5	0.057

The 5th Avenue / Jantz Road (#3) intersection LOS analysis does not provide the LOS during the AM and PM peak hours due to excessive delay and over-capacity conditions. It is estimated that the eastbound LOS is F with the eastbound lane as the critical lane with delay over 2,000 seconds per vehicle.

As shown in Table 14, three out of the eight studied intersections operate at an acceptable LOS during the 2033 With Both Projects (All Phases of Both Estates) conditions during the AM and PM peak hours.

The SR 124 / US Highway 12 WB Ramps (#1) intersection will operate with a v/c ratio of 1.455 during the PM peak hour, greater than the WSDOT-recommended maximum 0.9 v/c ratio for a roundabout approach. The SR 124 and 5th Avenue / Gateway Road and US Highway 12 EB Ramps (#2) intersection will operate with v/c ratios of 2.265 and 2.022 during the AM and PM peak hours, respectively, greater than the WSDOT-recommended maximum 0.9 v/c ratio for a roundabout approach. The 5th Avenue / Jantz Road (#3) intersection will operate at LOS F during the AM and PM peak hours, below the County LOS D standard. The Jantz Road and Ray Boulevard / Humorist Road (#4) intersection will operate at LOS F during the AM and PM peak hours, below the County LOS D standard. The US Highway 12 / Hanson Loop Road (#6) intersection will operate at LOS F during the PM peak hour, below the WSDOT LOS C standard. Mitigation alternatives for these intersections are discussed below in the Intersection Mitigation section.

The LOS estimate assumes the BBP in-process project adds the west leg of the 5th Avenue / Jantz Road intersection. The LOS has been updated in the Sensitivity Analysis section 3.6.

At the SR 124 / US Highway 12 WB Ramps Intersection, a modeling methodology adjustment was tested to check the intersection's sensitivity to certain inputs. With a background growth rate of 2%, the roundabout v/c ratio would be 1.049; however, with a background growth rate of 1%, consistent with the BBP TIA, the roundabout v/c ratio would be 0.867 or less. Since the BFCG model estimates no traffic growth on the local Burbank roadways, using a 1% growth rate appears reasonable. This finding suggests that the mitigations recommended with the BBP likely will provide adequate mitigation for the 2033 total traffic conditions, including trips from the BBP, Huntsman's Estates, and Farmstead. A conceptual graphic of the mitigated intersection is provided in Appendix E.

3.5 Intersection Mitigation

The LOS analyses above anticipate that five studied intersections will operate below the applicable operation standards during one or more future scenario. Mitigation improvements are required at these locations to maintain acceptable operations. All the following mitigation discussions reference the 2033 With Both Projects scenario to match the estimated BBP build-out year and to assess the mitigation responsibilities among all three projects (Huntsman's Estates, Farmstead, and the BBP).

Two of the deficient intersections are recommended for improvements within the BBP TIA, so, for consistency, this section evaluates these intersections with the recommended mitigation improvements in place. At the other three deficient intersections, new mitigation alternatives are evaluated for their effectiveness. This section recommends mitigation approaches for all five intersections.

One modeling methodology adjustment was applied to the mitigated scenarios. Because of the increased traffic from the BBP in-process project and the Huntsman's Estates and Farmstead projects, the PHF was adjusted to 1.0 at the WSDOT-controlled intersections and to 0.92 at all other intersections. This PHF adjustment is consistent with the BBP TIA approach. This adjustment alone did not bring the LOS results back within the applicable standards, so capacity mitigation improvements were evaluated.

One adjustment was made to the project trip inputs for these mitigated scenarios. Subsequent to completing the Level of Service Analyses above, PBS received an updated site plan for the Farmstead project. The revised Farmstead lot layout includes 468 dwelling units, representing an increase of 25 units from the conditions evaluated above. This updated lot plan is projected to generate an additional 14 trips in the AM peak hour and 21 trips during the PM peak hour. The intersection mitigation sections below address the 2033 With Both Projects scenario with these increased trips. Note that this increase in proposed dwelling units will not cause any additional operational deficiencies beyond those already noted.

3.5.1 SR 124 / US Highway 12 WB Ramps Intersection

The SR 124 / US Highway 12 WB Ramps (#1) intersection shows a v/c ratio exceeding 0.9 in the southbound right-turn lane during the future PM peak hour. PBS finds that modeling the lane as a continuous right-turn lane, with an added westbound receiving lane on the on-ramp that merges downstream into the existing lane, would improve the intersection operations to an acceptable v/c ratio of 0.777 or less for all scenarios and peak hours. A conceptual graphic of the mitigated intersection is provided in Appendix E.

3.5.2 SR 124 and 5th Avenue / Gateway Road and US Highway 12 EB Ramps Intersection

The SR 124 and 5th Avenue / Gateway Road and US Highway 12 EB Ramps (#2) intersection shows high delays and over-capacity conditions, most especially in the westbound shared left-through lane, during the future AM and PM peak hours. Consistent with the BBP TIA, the intersection was modeled with a two-lane roundabout with two northbound circulating lanes and two westbound circulating lanes. Although these

mitigations will reduce the intersection delay and LOS to acceptable levels (LOS B and C in the AM and PM peak hours, respectively), the v/c ratio would remain above 0.9 during the PM peak hour.

3.5.3 5th Avenue / Jantz Road Intersection

The 5th Avenue / Jantz Road (#3) intersection shows high delays and over-capacity conditions, most especially on the eastbound approach, during the future AM and PM peak hours. Consistent with the BBP TIA, the intersection was modeled with a traffic signal with an added southbound right-turn lane and with a westbound right-turn lane with an additional northbound receiving lane. This mitigation would improve the intersection operations from LOS F (during both AM and PM peak hours) to LOS C (AM) and LOS B (PM) with the v/c ratio under 1.0 during the AM and PM peak hours. No additional mitigation improvements beyond those already considered are required to achieve acceptable intersection operations. A conceptual graphic of the mitigated intersection is provided in Appendix E.

This mitigation finding relies upon the BBP TIA, which anticipated constructing and generating traffic on a new west leg of the 5th Avenue / Jantz Road intersection. The mitigation has been refined updated in the Sensitivity Analysis section below.

3.5.4 Jantz Road and Ray Boulevard / Humorist Road Intersection

The Jantz Road and Ray Boulevard / Humorist Road (#4) intersection shows high delays and over-capacity conditions, most especially on the northbound and southbound approaches, during the future AM and PM peak hours, respectively. PBS finds that changing the stop-controlled legs to the eastbound and westbound legs, which will have significantly lower volumes than the northbound and southbound legs as the Huntsman's Estates and Farmstead projects develop, would improve the intersection operations to an acceptable LOS D for all scenarios and peak hours. A conceptual graphic of the mitigated intersection is provided in Appendix E.

PBS also finds that reconfiguring the stop controls at the intersection could compromise drivers' sight lines. Free-flowing northbound and southbound drivers may not clearly see the intersection as they approach through horizontal curves, which could adversely impact intersection safety, especially for pedestrians crossing Jantz Road or Ray Boulevard. Stopped eastbound and westbound drivers may not clearly see the approaching traffic in time to adequately judge the gaps in cross traffic. Additional verification of the driver sight lines, and possibly additional pedestrian safety improvements, are merited.

3.5.5 US Highway 12 / Hanson Loop Road Intersection

The US Highway 12 / Hanson Loop Road (#6) intersection shows high delays on the eastbound and westbound approaches during the PM peak hour. All turns from the stop-controlled approaches are provided acceleration and merge lanes along US Highway 12. The critical delay is 74.6 seconds per vehicle in the 2033 Without Project conditions, which sets the mitigation target for the proposed project.

The Farmstead project is anticipated to add eastbound right turns and northbound left turns at the intersection. PBS finds that widening the eastbound approach to provide an exclusive eastbound right-turn lane would reduce the critical delay from 88.7 seconds to 68.1 seconds during the 2033 With Project PM peak hour. A conceptual graphic of the mitigated intersection is provided in Appendix E.

Additional improvements could involve restricting the eastbound and/or westbound turning movements or modifying the intersection traffic control. These improvements should be implemented only if the background growth rate of the intersection is observed to match the assumed 2% background growth. WSDOT would require a formal intersection control evaluation before pursuing such modifications.

3.5.6 Mitigation Results and Next Steps

The mitigation recommendations discussed in the sections above were evaluated for their effectiveness at mitigating the intersection operations deficiencies forecast for the 2033 With Both Projects conditions. Table 15 presents the mitigated LOS results for the five deficient intersections. The mitigated LOS calculations are provided in Appendix E.

Table 15. Estimated 2033 Mitigated Level of Service With Both Projects Conditions

Int. #	INTERSECTION MITIGATION *(Critical lane group, AM / PM)*	LOS Standard	AM Peak Hour			PM Peak Hour		
			LOS	*Delay (sec/veh)*	*v/c*	*LOS*	*Delay (sec/veh)*	*v/c*
1	SR 124 / US Highway 12 WB Ramps With SB RT continuous movement and added merge lane to WB on-ramp *(NB)*	v/c< 0.9	B	14.6	0.713	B	16.9	0.781
2	SR 124 and 5th Avenue / Gateway Road and US Highway 12 EB Ramps With added WB and NB lanes and 1% background growth *(WB LT-TH)*	v/c< 0.9	A	7.9	0.594	B	12.7	0.880
3	5th Avenue / Jantz Road With traffic signal and added SB and WB lanes and added NB receiving lane *(SB LT)*	D	C	27.7	1.00	B	19.8	0.94
4	Jantz Road and Ray Boulevard / Humorist Road With TWSC on east and west legs *(EB / SB)*	D	D	28.1	0.270	D	28.4	0.160
6	US Highway 12 / Hanson Loop Road With added EB RT lane *(EB LT-TH)*	C	C	21.9	0.090	**F**	**68.1**	**0.257**

TWSC: two-way stop-control

As shown in Table 15, the mitigation improvements discussed above can mitigate the intersection operations to fall within acceptable ranges except the US Highway 12 / Hanson Loop Road intersection, which, as also discussed above, is required only to be mitigated back to the Without Project conditions.

To achieve the following mitigations, it is recommended that the Huntsman's Estates developer and the Farmstead developer negotiate a cost-sharing arrangement by which the burden of mitigation is shared equitably. The following mitigation improvements would be shared by both parties since both contribute trips at the deficient intersections:

- At the Jantz Road and Ray Boulevard / Humorist Road intersection:
    - Reassign the stop-control to the eastbound and westbound movements.
    - Add high-visibility crosswalk features to both existing marked crosswalks.
    - Install rectangular rapid-flashing beacons (RRFB) alongside the crosswalk of the north leg to alert approaching drivers of pedestrians in the crosswalk.
    - Address site distance at the northwest and southeast corners.
- At the US Highway 12 / Hanson Loop Road intersection:
    - Widen the eastbound approach to provide a shared left-through lane and an exclusive right-turn lane.

To achieve the following mitigations, it is recommended that the Huntsman's Estates developer contact the Port of Walla Walla and the Farmstead developer to negotiate a cost-sharing arrangement by which the burden of mitigation is shared equitably. The following mitigation improvements would be shared by the three parties since all contribute trips at the deficient intersections:

- At the SR 124 / US Highway 12 WB Ramps intersection:
    - Construct a westbound receiving lane departing the intersection to the US Highway 12 on-ramp.
    - Reconfigure the southbound right-turn movement to flow freely into the added lane, then to merge into the existing lane downstream before merging into the US Highway 12 mainline.
- At the SR 124 and 5th Avenue / Gateway Road and US Highway 12 EB Ramps intersection, consistent with the recommendation in the BBP TIA:
    - Expand the south leg roadway provide two travel lanes in each direction.
    - Designate the outer northbound approach lane exclusively for right turns to the eastbound US Highway 12 on-ramp.
    - Expand the roundabout to provide two circulating lanes.
    - Reconfigure the westbound approach to allow left turns from both approach lanes.
- At the 5th Avenue / Jantz Road intersection, consistent with the recommendation in the BBP TIA:
    - Install a traffic signal with an exclusive southbound left-turn lane and a westbound right-turn lane with a receiving lane.

Findings: A continuous southbound right-turn lane at the SR 124 / US Highway 12 WB Ramps intersection will bring the intersection to operate at an acceptable LOS in the 2033 PM With Both Projects conditions.

A two-lane roundabout and two circulating roundabout lanes at the SR 124 and 5th Avenue / Gateway Road and US Highway 12 EB Ramps intersection will bring the intersection to operate at an acceptable LOS in the 2033 With Both Projects conditions in the AM and PM peak hours.

Changing the intersection control from two-way stop-control (TWSC) to signal at the 5th Avenue / Jantz Road intersection with an added southbound left-turn lane and an added westbound right-turn lane with a receiving lane will bring the intersection to operate at an acceptable LOS in the 2033 With Both Projects conditions in the AM and PM peak hours.

Changing the intersection control at the Jantz Road and Ray Boulevard / Humorist Road intersection to allow for northbound and southbound free-flowing movement with the east and west legs stop-controlled will bring the intersection to operate at an acceptable LOS in the 2033 With Both Projects conditions during the AM and PM peak hours.

Widening the eastbound approach at the US Highway 12 / Hanson Loop Road intersection to provide an exclusive eastbound right-turn lane would mitigate the impacts generated by the Huntsman's Estates project.

Recommendations: Negotiate an equitable cost-sharing arrangement between the Huntsman's Estates developer and the Farmstead developer to achieve the following mitigations to which both parties' projects contribute.

- At the US Highway 12 / Hanson Loop Road intersection, widen the eastbound approach to provide a shared left-through lane and an exclusive right-turn lane.
- At the Jantz Road and Ray Boulevard / Humorist Road intersection:
    - Reassign the stop-control to the eastbound and westbound movements.
    - Add high-visibility crosswalk features to both existing marked crosswalks.
    - Install rectangular rapid-flashing beacons (RRFB) alongside the crosswalk of the north leg to alert approaching drivers of pedestrians in the crosswalk.
    - Address site distance at the northwest and southeast corners.

Negotiate an equitable cost-sharing arrangement among the Huntsman's Estates developer, the Port of Walla Walla, and the Farmstead developer to achieve the following mitigations to which all three parties' projects contribute.

- At the SR 124 / US Highway 12 WB Ramps intersection:
    - Construct a westbound receiving lane departing the intersection to the US Highway 12 on-ramp.
    - Reconfigure the southbound right-turn movement to flow freely into the added lane, then to merge into the existing lane downstream before merging into the US Highway 12 mainline.
- At the SR 124 and 5th Avenue / Gateway Road and US Highway 12 EB Ramps intersection, consistent with the recommendation in the BBP TIA:
    - Expand the south leg roadway provide two travel lanes in each direction.
    - Designate the outer northbound approach lane exclusively for right turns to the eastbound US Highway 12 on-ramp.
    - Expand the roundabout to provide two circulating lanes.
    - Reconfigure the westbound approach to allow left turns from both approach lanes.
- At the 5th Avenue / Jantz Road intersection, consistent with the recommendation in the BBP TIA:
    - Install a traffic signal with an exclusive southbound left-turn lane and a westbound right-turn lane with a receiving lane.

WSDOT should monitor growth at the SR 124 and 5th Avenue / Gateway Road and US Highway 12 EB Ramps and US Highway 12 / Hanson Loop Road intersections to ensure the intersections operate at an acceptable LOS and v/c ratio.

3.6 Sensitivity Analysis

The purpose of this sensitivity analysis is to identify what portion of the Huntsman's Estates and Farmstead projects could be built before mitigation might be required at one of the study intersections. This sensitivity analysis does not assume any of the mitigations discussed above to be in place; it relies upon the current intersection controls and configurations as does the Level of Service Analyses section earlier in this TIA. None of the three access intersections were found to drop below the adopted LOS standard, so they are omitted from this sensitivity analysis.

As part of the sensitivity analysis, three adjustments were made to the analysis model inputs and assumptions.

- The County approval of the BBP project requires the Port of Walla Walla to reevaluate the project's traffic impacts after 40% of its projected trips are generated. In other words, no mitigation is required before at least 40% of the BBP trips are generated. Therefore, this sensitivity analysis assumes only 40% of the BBP trips to be traveling on the roadway network.
- Recent amendments to the BBP BSP do not include the west leg to the 5th Avenue / Jantz Road intersection as originally assumed in the BBP TIA. Therefore, the sensitivity analysis refines the LOS analyses above by omitting the west leg of the intersection and redistributing the BBP trips accordingly.
- The background growth rate was reduced from 2% per year to 1% per year. This adjustment better aligns with the BFCG forecast models and with the BBP TIA assumptions.

The sensitivity analysis increased the number of trips generated by the proposed dwelling units and checked the study intersections' LOS until it dropped below the applicable operational standard at any one location. The first trial was with the proposed Phase 1 for both Huntsman's Estates and Farmstead, and the results are shown below in Table 16.

Table 16 presents the LOS results for the study intersections in 2025 with 40% of the BBP built out and Phase 1 of both Huntsman's Estates and Farmstead (470 combined dwelling units). The amended BBP BSP and the LOS calculations are provided in Appendix G.

Table 16. Estimated 2025 Level of Service with Both Projects Conditions (Phase 1 of Both Estates), 40% BBP Trips, and Amended BBP BSP

Int. #	INTERSECTION *(Critical lane group, AM / PM)*	LOS Standard	AM Peak Hour			PM Peak Hour		
			LOS	*Delay (sec/veh)*	*v/c*	*LOS*	*Delay (sec/veh)*	*v/c*
1	SR 124 / US Highway 12 WB Ramps *(NB / SB RT)*	v/c< 0.9	A	8.4	0.455	A	9.0	0.606
2	SR 124 and 5th Avenue / Gateway Road and US Highway 12 EB Ramps *(WB)*	v/c< 0.9	A	6.7	0.544	A	7.3	0.640
3	5th Avenue / Jantz Road *(WB)*	D	C	15.6	0.574	D	29.7	0.798

Int. #	INTERSECTION *(Critical lane group, AM / PM)*	LOS Standard	AM Peak Hour			PM Peak Hour		
			LOS	*Delay (sec/veh)*	*v/c*	*LOS*	*Delay (sec/veh)*	*v/c*
4	Jantz Road and Ray Boulevard / Humorist Road *(NB / SB)*	D	C	18.4	0.611	C	16.0	0.592
5	Quincy Road / Hanson Loop Road *(SB)*	C	A	9.0	0.032	A	9.3	0.031
6	US Highway 12 / Hanson Loop Road *(EB / WB)*	C	B	10.0	0.047	**D**	**30.7**	**0.059**

As found in the 2025 Without Project conditions, the US Highway 12 / Hanson Loop Road intersection operates below the WSDOT LOS standard C during the PM peak hour. All other studied intersections remain within the applicable LOS standard in the 2025 With Phase 1 of Both Projects conditions and approximately 40% of the BBP build-out during the AM and PM peak hour.

The sensitivity analysis continued to increase the number of dwelling units in both projects beyond their Phase 1 values until one or another intersection LOS dropped below standards. Through these iterations, the 5th Avenue / Jantz Road intersection was found to be the most sensitive intersection impacted by new trips from the proposed Huntsman's Estates and Farmstead projects; in other words, it dropped below its applicable operational standard (LOS D) before any other study intersection.

Table 17 presents the 2025 LOS results for the study intersections at the highest number of dwelling units that can be built without the 5th Avenue / Jantz Road exceeding the County's LOS D standard. The results in Table 17 also include 40% of the BBP built out and the BBP BSP amended. The amended BBP BSP and the LOS calculations are provided in Appendix G.

Table 17. 2025 LOS With 500 Dwelling Units, 40% BBP Trips, and Amended BBP BSP

Int. #	INTERSECTION *(Critical lane group, AM / PM)*	LOS Standard	AM Peak Hour			PM Peak Hour		
			LOS	*Delay (sec/veh)*	*v/c*	*LOS*	*Delay (sec/veh)*	*v/c*
1	SR 124 / US Highway 12 WB Ramps *(NB / SB RT)*	v/c< 0.9	A	8.5	0.462	A	9.1	0.609
2	SR 124 and 5th Avenue / Gateway Road and US Highway 12 EB Ramps *(WB)*	v/c< 0.9	A	6.8	0.552	A	7.4	0.654
3	5th Avenue / Jantz Road *(WB)*	D	C	15.9	0.591	D	33.3	0.829
4	Jantz Road and Ray Boulevard / Humorist Road *(NB / SB)*	D	C	22.8	0.699	C	16.6	0.616
5	Quincy Road / Hanson Loop Road *(SB)*	C	A	9.0	0.035	A	9.3	0.031

Int. #	INTERSECTION *(Critical lane group, AM / PM)*	LOS Standard	AM Peak Hour			PM Peak Hour		
			LOS	***Delay (sec/veh)***	***v/c***	***LOS***	***Delay (sec/veh)***	***v/c***
6	US Highway 12 / Hanson Loop Road *(EB / WB)*	C	B	11.3	0.065	**D**	**31.1**	**0.060**

As found in the 2025 Without Project conditions, the US Highway 12 / Hanson Loop Road intersection operates below the WSDOT LOS standard C during the PM peak hour. All others studied intersections remain within the applicable LOS standards in the 2025 conditions. Up to 500 dwelling units (combined between the Huntsman's Estates and Farmstead projects) can be built out in the 2025 conditions, before another study intersection LOS drops below standards during either the AM or PM peak hour. The trips generated by additional dwelling units would cause the 5th Avenue / Jantz Road intersection to operate at LOS E, below the County's LOS D standard.

For full buildout of the Huntsman's Estates and Farmstead projects, the improvements recommended above in the Intersection Mitigation section still apply.

Findings: Up to 500 dwelling units can be built out at the Huntsman's Estates and Farmstead projects until the 5th Avenue / Jantz Road intersection operates below the acceptable LOS in the 2025 With Project PM peak hour conditions. This finding relies upon the amended BBP BSP and a 1% annual background growth rate.

WSDOT should monitor growth at the US Highway 12 / Hanson Loop Road intersections to ensure the intersection operates at an acceptable LOS and v/c ratio.

Recommendation: With the mitigation at the US Highway 12 / Hanson Loop Road, 500 dwelling units should be approved for the Huntsman's Estates and Farmstead projects. The developers may determine the equitable division of the 500 dwelling units; PBS suggests they could be split equally between the projects, with 250 units for each. Additional traffic mitigation should be evaluated and approved before more than 500 dwelling units are approved.

4 SAFETY ANALYSIS

4.1 Collision Analysis

Collision data from the study area were obtained from WSDOT for the five-year period spanning from January 2016 through December 2020. This analysis assumes that a collision rate less than the critical collision rate for the intersection is typically considered to be within acceptable parameters. A collision rate above the critical rate is worthy of further examination. The detailed collision data are provided in Appendix F. Table 18 presents the results of the collision analysis.

Table 18. Collision Analysis for Study Area Intersections (January 1, 2016, through December 31, 2020)

Int. #	Intersection	Collision Type						Total Collisions	Critical Rate	Collison Rate
		Rear-end	Angle	Object	Side-swipe	Head-on	Other			
1	SR 124 / US Highway 12 WB Ramps	1	2	5	-	1	3	12	0.88	0.71
2	SR 124 and 5th Avenue / Gateway Road and US Highway 12 EB Ramps	-	1	2	1	-	-	4	0.92	0.31
3	5th Avenue / Jantz Road	2	-	-	-	-	1	3	0.99	0.39
4	Jantz Road and Ray Boulevard / Humorist Road	-	1	-	-	-	-	1	1.12	0.26
5	Quincy Road / Hanson Loop Road	-	-	-	-	-	-	0	1.31	0
6	US Highway 12 / Hanson Loop Road	-	1	-	-	-	-	1	0.83	0.04
7	Quincy Road / Road B	-	-	-	-	-	-	0	1.38	-
8	Quincy Road / Road C	-	-	-	-	-	-	0	1.38	-

To calculate the collision rate, the PM peak hour total entering volumes from the existing TMCs were multiplied by 10 to provide an approximation of the average daily trips. Detailed calculations of the critical rates and collision rates are provided in Appendix F.

The collision rate is below the critical rate at all the studied intersections.

At the SR 124 / US Highway 12 WB Ramps intersection, the pattern of object collisions is notable. Of the 12 total collisions at the intersection, five of them were object collisions with the roundabout curb or traffic

island. If this pattern recurs in the future, PBS recommends WSDOT evaluate the intersection conditions and install advisory speed signage for all approaches.

Findings: The collision rate is below the collision rate at all the studied intersections. A pattern of object collisions at the SR 124 / US Highway 12 WB Ramps intersection is notable.

Recommendations: WSDOT should evaluate the intersection conditions and install advisory speed signage for all approaches at the SR 124 / US Highway 12 WB Ramps intersection.

4.2 Pedestrian, Bicycle, and Public Transportation Facilities

Pedestrian, bicycle, and transit facilities are not available for future residents to travel between the project site and the schools and businesses to the north. The nearest improved pedestrian facilities are located on the north side of the Jantz Road and Ray Boulevard / Humorist Road intersection, approximately 0.75 mile from the Huntsman's Estates site as measured along the existing roadways. Any potential pedestrian connection through the adjoining neighborhood to the north—for example, via Apple Lane and Harrison Road—would be approximately the same distance. The total distance to the Columbia School District schools along Maple is at least 1.0 to 1.2 miles, plus walking distance within the Huntsman's Estates site. Given these distances, it is likely that students living within Huntsman's Estates will be offered school bus transportation.

Sidewalks will be provided throughout the proposed site. All driveways, sidewalks, crosswalks, and curb ramps constructed or modified with the development should be compliant with the current Americans with Disabilities Act (ADA) guidelines. Quincy Road will include frontage improvements that include sidewalks.

Finding: Pedestrian, bicycle, and transit facilities are not readily available for future subdivision residents in the study area. A gap of approximately 0.75 mile exists between the Huntsman's Estates site and the nearest improved pedestrian facilities. It is likely that students living within Huntsman's Estates will be offered school bus transportation.

Recommendation: Construct standard frontage improvements, including sidewalks, along Quincy Road. Assure all driveways, sidewalks, crosswalks, and curb ramps constructed with the subdivision project comply with current ADA guidelines.

4.3 Sight Distance at Site Access Locations

The two proposed Huntsman's Estates site accesses, Road B and Road C, do not currently exist. All sight distances were evaluated graphically. The generally flat terrain, straight alignment on Quincy Road with a 35 mile per hour (mph) posted speed on Quincy Road suggest that adequate sight distances may be achievable through design and construction of the proposed site access intersections on both roadways.

All proposed site accesses should be designed in accordance with Chapter 3.4 of the Walla Walla County Road Standards (September 8, 2015), based on the accessed roadways' respective posted speeds. Based on the current 35-mph posted speed on Quincy Road and Hanson Loop Road, the proposed site access must have the following intersection sight distance (ISD) standard:

At Quincy Road / Road B and Quincy Road / Road C (Proposed Site Accesses):

- At least 390 feet of ISD to the north and south for a left turn from the eastbound site access onto northbound Quincy Road.

- At least 335 feet of ISD to the north and south for a right turn from the eastbound site access onto southbound Quincy Road.

Findings: Review of the current conditions along Quincy Road suggests that adequate ISD is available.

Recommendations: Design the proposed site access intersections in accordance with Walla Walla County Road Standards guidelines for ISD based on the posted speed. Install no objects within the sight distance triangles that would block exiting drivers' view of approaching traffic.

5 STUDY FINDINGS

The findings of this TIA are summarized below from the foregoing narrative.

5.1 Present Traffic Volumes

ATD collected the data on January 20, 2022, at the following intersections, which had a typical school schedule:

- SR 124 / US Highway 12 WB Ramps
- SR 124 and 5th Avenue / Gateway Road and US Highway 12 EB Ramps
- 5th Avenue / Jantz Road
- Jantz Road and Ray Boulevard / Humorist Road
- Quincy Road / Hanson Loop Road
- US Highway 12 / Hanson Loop Road
- Quincy Road / South Drive (South Drive exists as a gravel roadway)
- Hanson Loop Road / Red Lane (Red Lane exists as a driveway that serves two lots)

TMCs at the Quincy Road / South Drive were used to estimate the northbound and southbound through trips past the future Road B and Road C site accesses. The Quincy Road / South Drive intersection exists as a gravel road 250 feet northeast of the site.

5.2 In-Process Projects

The Burbank Business Park (BBP) TIA was identified for inclusion in this TIA.

5.3 Future Traffic Volumes

Background growth is a generic increase in traffic volumes that either is not attributable to specific developments or is attributable to influences outside the study area. An annually compounded background growth rate of 2% was calculated based on the BFCG 2025 and 2045 model link volumes.

5.4 Trip Generation

When fully built out and occupied in 2028, the Huntsman's Estates development is anticipated to generate 4,305 vehicle trips on a typical weekday, including 313 trips during the AM peak hour and 438 trips during the PM peak hour.

5.5 Access and Circulation

The distribution of site trips to the access intersection was based on the lots with the shortest path to either Quincy Road or Hanson Loop Road. The site trips will be distributed from the site with 82% using Road B (northern driveway) and 18% using Road C (southern driveway).

5.6 Intersection Performance

- All studied intersections currently operate at an acceptable LOS during the weekday AM and PM peak hours.
- Seven out of the eight studied intersections operate at an acceptable LOS during the 2025 With Both Projects (Phase 1 of Both Estates) conditions during the AM and PM peak hours.
- Four out of the eight studied intersections operate at an acceptable LOS during the 2028 and 2033 With Both Projects (All Phases of Both Estates) conditions during the AM and PM peak hours.
- The SR 124 / US Highway 12 WB Ramps intersection operates below the acceptable LOS during the 2028 and 2033 With Both Projects (All Phases of Both Estates) conditions during the peak hour.

- The SR 124 and 5th Avenue / Gateway Road and US Highway 12 EB Ramps intersection operates below the acceptable LOS during the 2028 and 2033 With Both Projects (All Phases of Both Estates) conditions during the AM and PM peak hours.
- The 5th Avenue / Jantz Road intersection operates below the acceptable LOS during the 2025, 2028, and 2033 With Both Projects (All Phases of Both Estates) conditions during the AM and PM peak hours.
- The US Highway 12 / Hanson Loop Road intersection operates below the acceptable LOS during the 2025, 2028, and 2033 With Both Projects (All Phases of Both Estates) conditions during the PM peak hour. The Huntsman's Estates and Farmstead projects do not contribute trips to the failing movement at the US Highway 12 / Hanson Loop Road intersection.
- WSDOT should monitor growth at the SR 124 and 5th Avenue / Gateway Road and US Highway 12 EB Ramps and US Highway 12 / Hanson Loop Road intersections to ensure the intersections operate at an acceptable LOS and v/c ratio.

5.7 Intersection Mitigation

- A continuous southbound right-turn lane at the SR 124 / US Highway 12 WB Ramps intersection will bring the intersection to operate at an acceptable LOS in the 2033 PM With Both Projects conditions.
- A two-lane roundabout and two circulating roundabout lanes at the SR 124 and 5th Avenue / Gateway Road and US Highway 12 EB Ramps intersection will bring the intersection to operate at an acceptable LOS in the 2033 With Both Projects conditions in the AM and PM peak hours.
- Changing the intersection control at the Jantz Road and Ray Boulevard / Humorist Road intersection to allow for northbound and southbound free-flowing movement with the east and west legs stop-controlled will bring the intersection to operate at an acceptable LOS in the 2033 With Both Projects conditions during the AM and PM peak hours.
- Widening the eastbound approach at the US Highway 12 / Hanson Loop Road intersection to provide an exclusive eastbound right-turn lane will mitigate the impacts generated by the Huntsman's Estates project.

5.8 Sensitivity Analysis

Up to 500 dwelling units can be built out at the Huntsman's Estates and Farmstead projects until the 5th Avenue / Jantz Road intersection operates below the acceptable LOS in the 2025 With Project PM peak hour conditions. This finding relies upon the amended BBP BSP and a 1% annual background growth rate.

WSDOT should monitor growth at the US Highway 12 / Hanson Loop Road intersections to ensure the intersection operates at an acceptable LOS and v/c ratio.

5.9 Collision Analysis

The collision rate is below the critical collision rate at all the studied intersections. A pattern of object collisions at the SR 124 / US Highway 12 WB Ramps intersection is notable.

5.10 Pedestrian, Bicycle Facilities, and Public Transportation

Pedestrian, bicycle, and transit facilities are not readily available for future subdivision residents in the study area. A gap of approximately 0.75 mile exists between the Huntsman's Estates site and the nearest improved pedestrian facilities. It is likely that students living within Huntsman's Estates will be offered school bus transportation.

5.11 Sight Distance at Site Access Locations

Review of the current conditions along Quincy Road and Hanson Loop Road suggests that adequate ISD is available.

6 RECOMMENDATIONS

The traffic impact analysis supports the following recommendations.

6.1 Sensitivity Analysis

Negotiate an equitable cost-sharing arrangement between the Huntsman's Estates developer and the Farmstead developer to achieve the following mitigations to which both parties' projects contribute.

- At the US Highway 12 / Hanson Loop Road intersection, widen the eastbound approach to provide a shared left-through lane and an exclusive right-turn lane.
- The County should approve 500 dwelling units (combined) for the Huntsman's Estates and Farmstead projects. The developers may determine the equitable division of the 500 dwelling units; PBS suggests they could be split equally between the projects, with 250 units for each. Additional traffic mitigation should be evaluated and approved before more than 500 dwelling units are approved.

6.2 Intersection Mitigation for Full Buildout

Negotiate an equitable cost-sharing arrangement between the Huntsman's Estates developer and the Farmstead developer to achieve the following mitigation to which both parties' projects contribute. This mitigation would apply after more than 500 dwelling units are permitted.

- At the Jantz Road and Ray Boulevard / Humorist Road intersection:
    - Reassign the stop-control to the eastbound and westbound movements.
    - Add high-visibility crosswalk features to both existing marked crosswalks.
    - Install rectangular rapid-flashing beacons (RRFB) alongside the crosswalk of the north leg to alert approaching drivers of pedestrians in the crosswalk.
    - Address site distance at the northwest and southeast corners.

6.3 Intersection Mitigation Shared with Port of Walla Walla

Negotiate an equitable cost-sharing arrangement among the Huntsman's Estates developer, the Port of Walla Walla, and the Farmstead developer to achieve the following mitigations to which all three parties' projects contribute. These mitigations would apply after more than 500 dwelling units are permitted.

- At the SR 124 / US Highway 12 WB Ramps intersection:
    - Construct a westbound receiving lane departing the intersection to the US Highway 12 on-ramp.
    - Reconfigure the southbound right-turn movement to flow freely into the added lane, then to merge into the existing lane downstream before merging into the US Highway 12 mainline.
- At the SR 124 and 5th Avenue / Gateway Road and US Highway 12 EB Ramps intersection, consistent with the recommendation in the BBP TIA:
    - Expand the south leg roadway provide two travel lanes in each direction.
    - Designate the outer northbound approach lane exclusively for right turns to the eastbound US Highway 12 on-ramp.
    - Expand the roundabout to provide two circulating lanes.
    - Reconfigure the westbound approach to allow left turns from both approach lanes.
- At the 5th Avenue / Jantz Road intersection, consistent with the recommendation in the BBP TIA:

- Install a traffic signal with an exclusive southbound left-turn lane and a westbound right-turn lane with a receiving lane.

6.4 Collision Analysis

WSDOT should evaluate the intersection conditions and install advisory speed signage for all approaches at the SR 124 / US Highway 12 WB Ramps intersection.

6.5 Pedestrian, Bicycle, and Public Transportation Facilities

Construct standard frontage improvements, including sidewalks, along Quincy Road. Assure all driveways, sidewalks, crosswalks, and curb ramps constructed with the subdivision project comply with current ADA guidelines.

6.6 Sight Distance at Site Access Location

Design the proposed site access intersections in accordance with American Association of State Highway and Transportation Officials guidelines for ISD based on the posted speed. Install no objects within the sight distance triangles that would block exiting drivers' view of approaching traffic.

7 REFERENCES

American Association of State Highway and Transportation Officials. (2018). *A Policy on the Geometric Design of Highways and Streets*, 7th Edition.

Institute of Transportation Engineers. (2021). *Trip Generation Manual*, 11th Edition.

Transportation Research Board, National Research Council. (2016). *Highway Capacity Manual* (HCM), 6th Edition.

Walla Walla County, Washington. (May 2010). *Traffic Impact Analysis Guidelines.*

Walla Walla County, Washington. (September 8, 2015). *Walla Walla County Road Standards.*

Washington State Department of Transportation (WSDOT). (January 1, 2010). *Level of Service Standards for Washington State Highways.*

WSDOT. (September 2021). *WSDOT Design Manual*.

WSDOT. (2021). *WSDOT Functional Classification Map*.

WSDOT. (March 2021). "WSDOT Sidra Policy Settings."

Figures

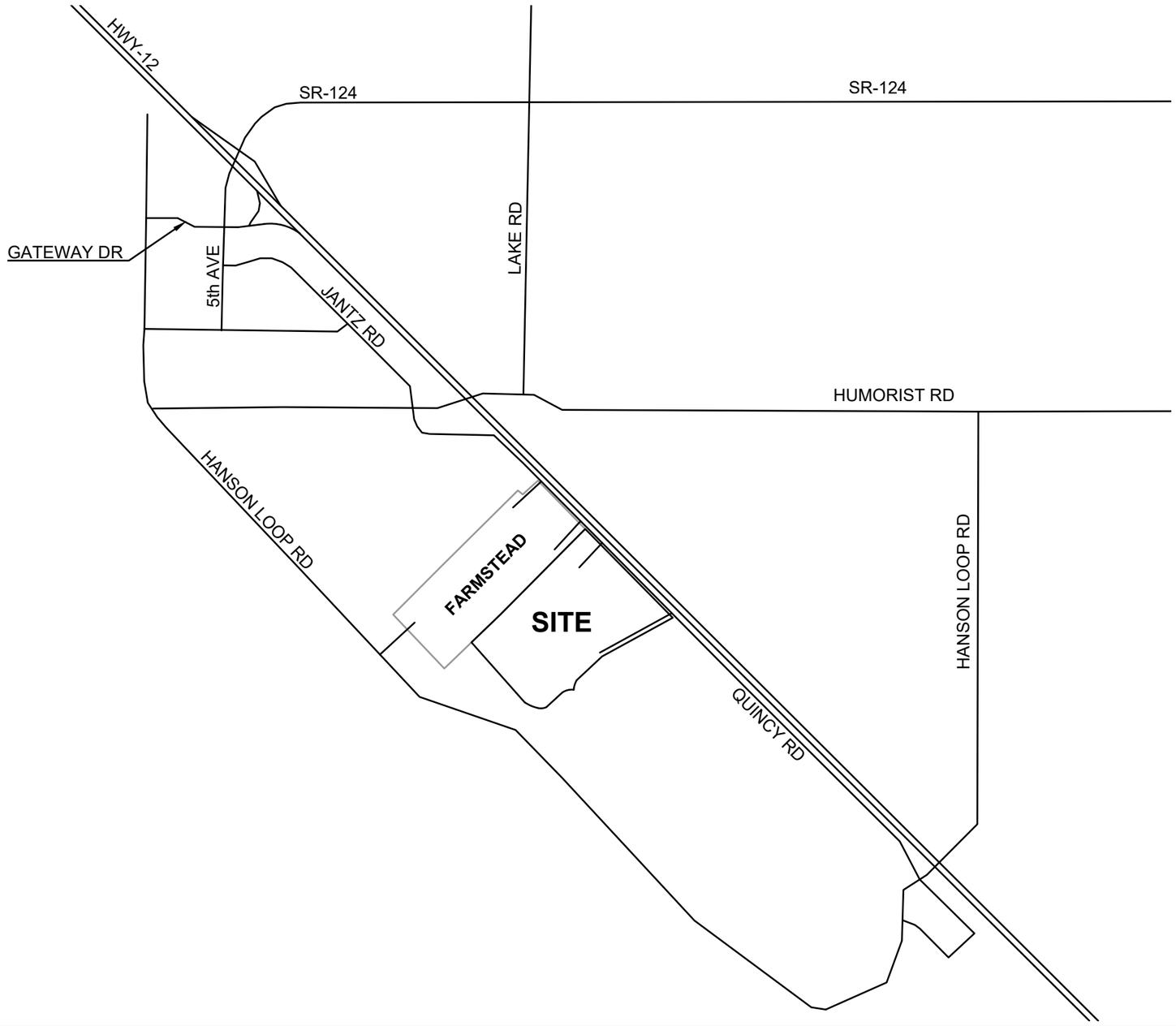

NTS

FIGURE 1

Vicinity Map

Huntsman's Estates

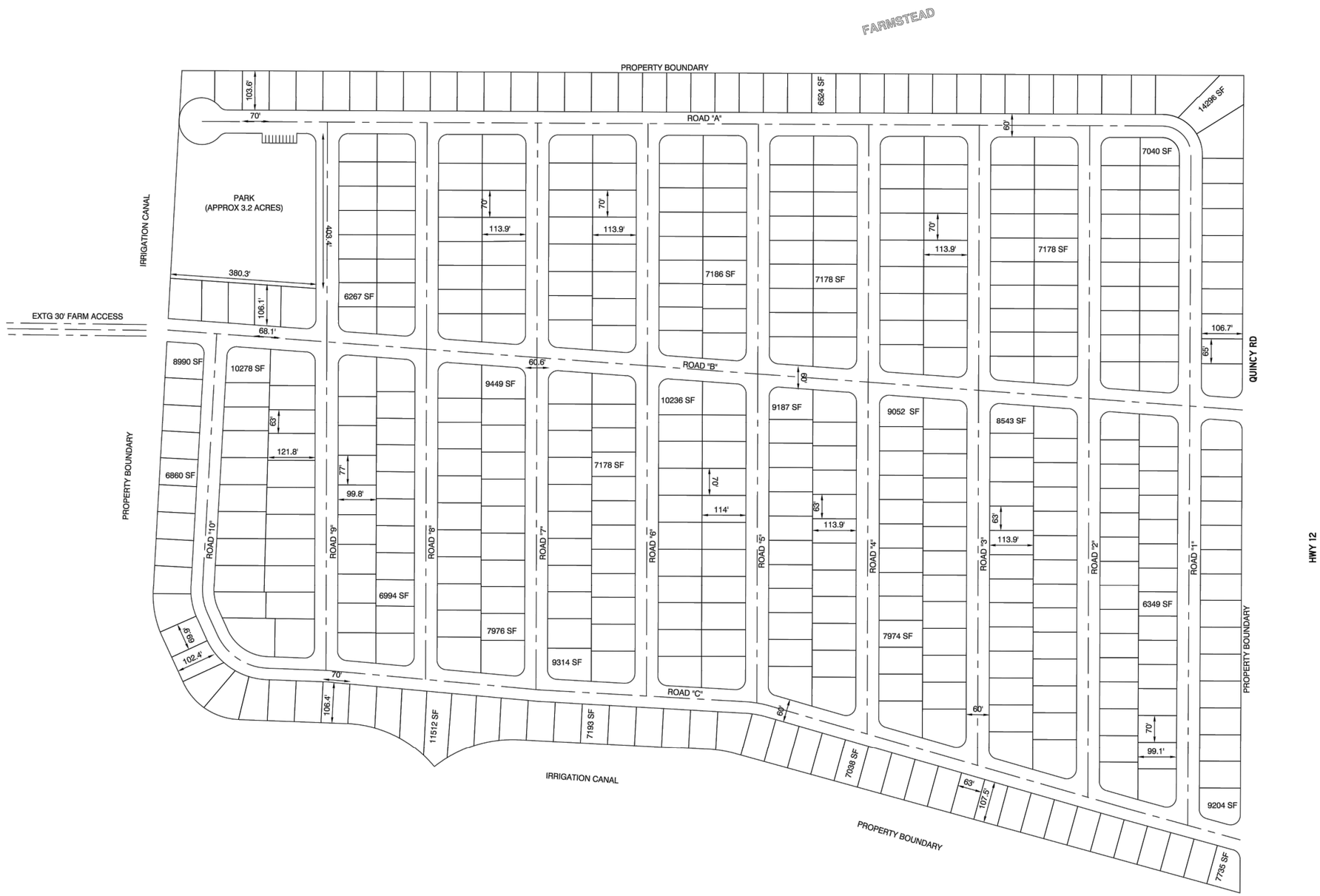

NTS

FIGURE 2

Site Plan

Huntsman's Estates

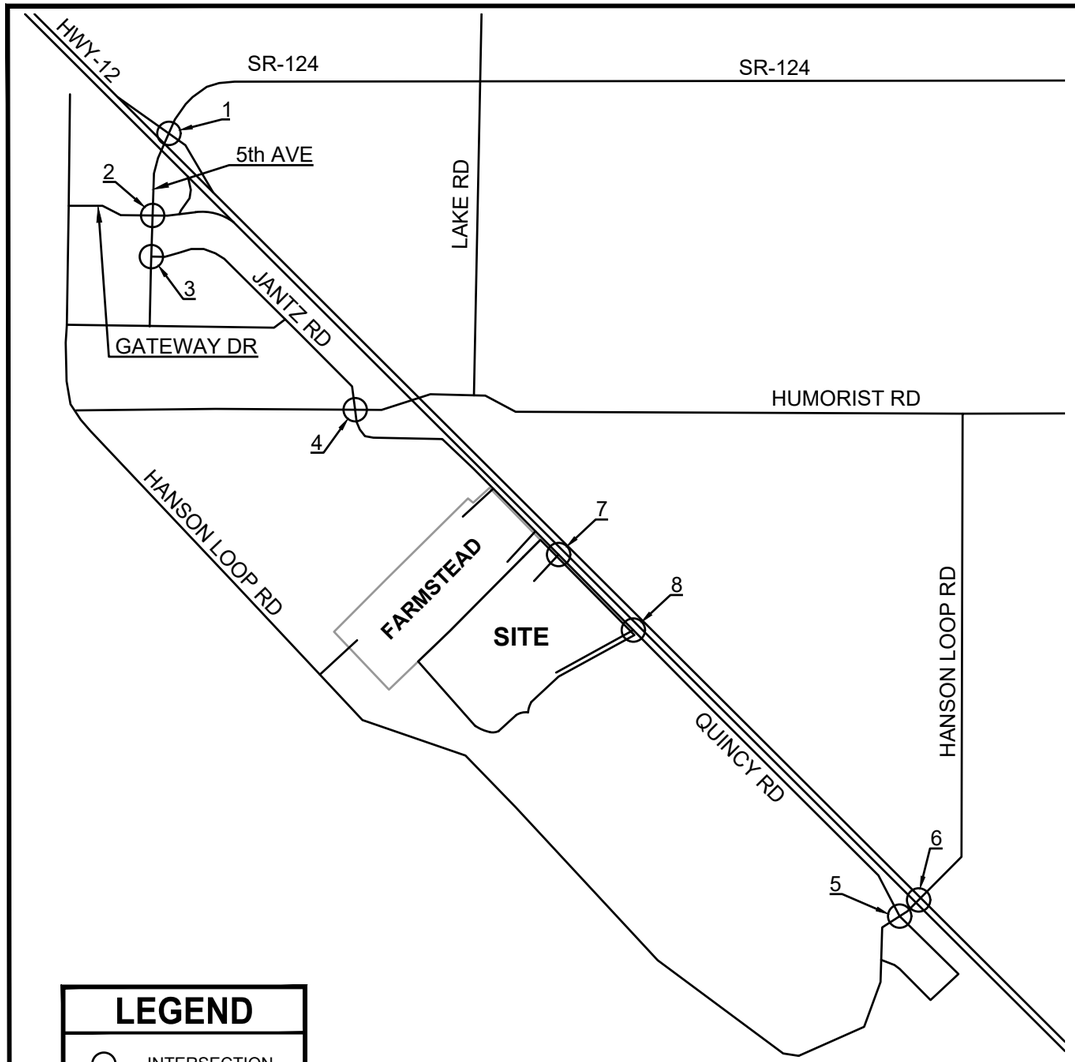

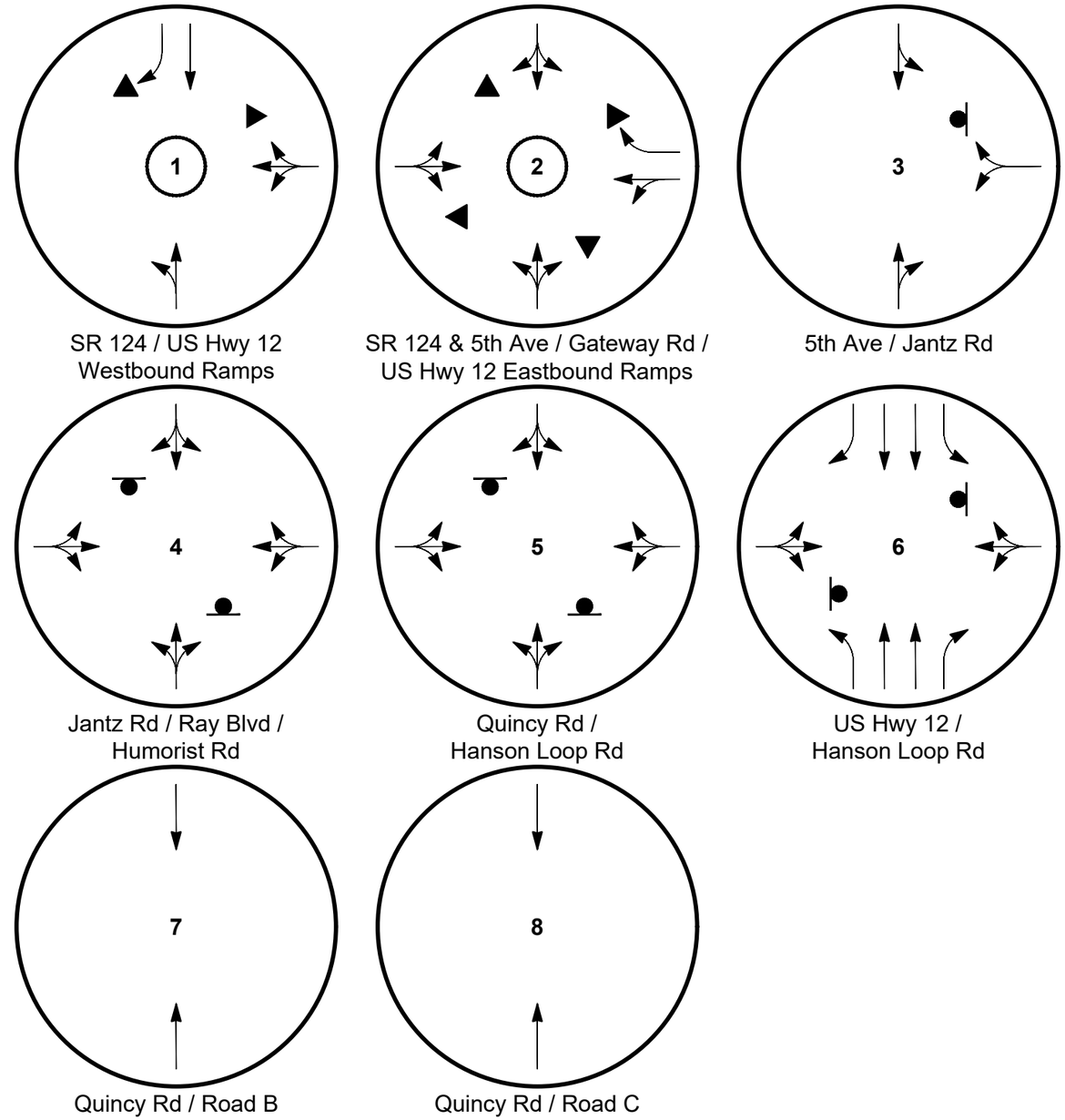

LEGEND

- INTERSECTION
- ROUNDABOUT
- STOP SIGN
- TRAFFIC SIGNAL
- YIELD

NTS

FIGURE 3

Exisitng Lane Configuration and Traffic Control

Huntsman's Estates

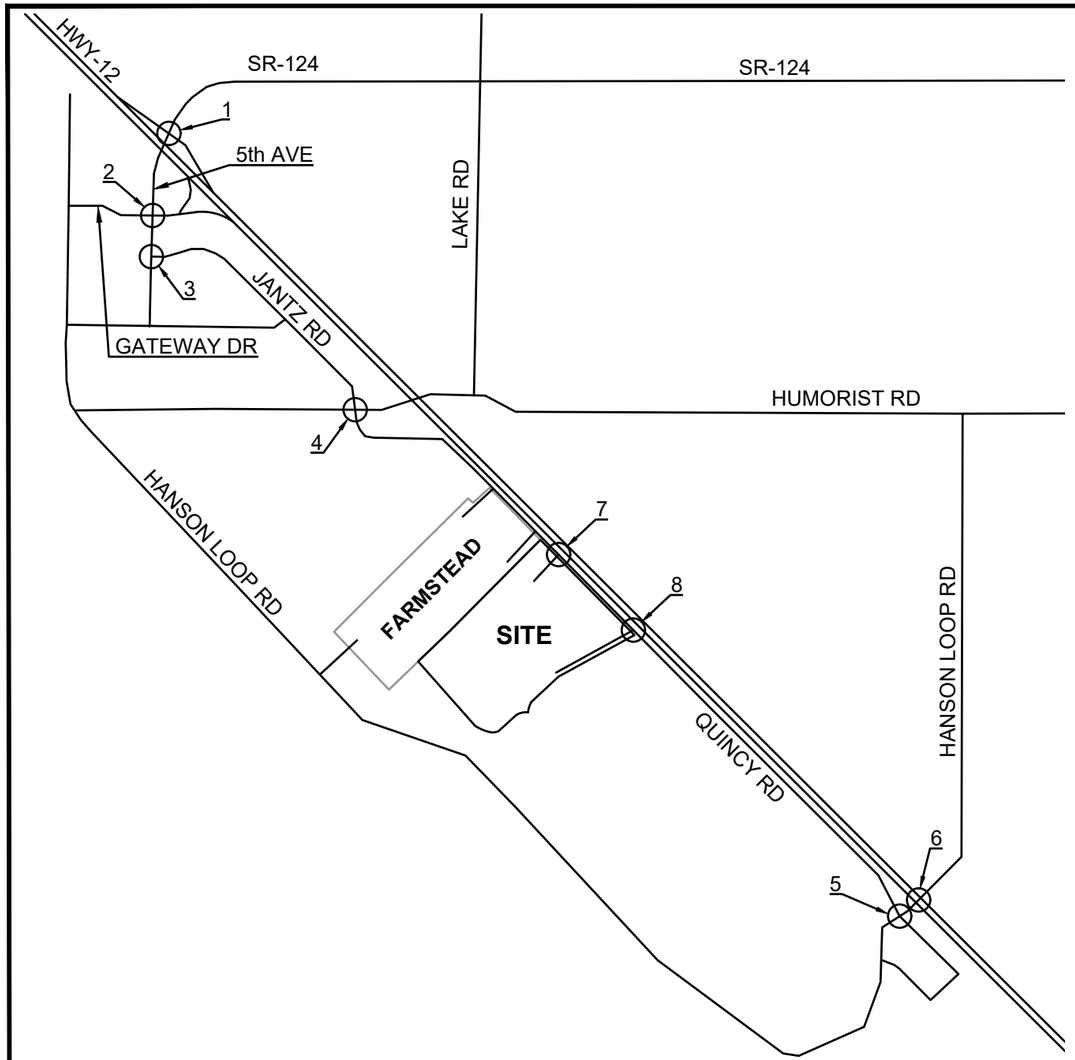

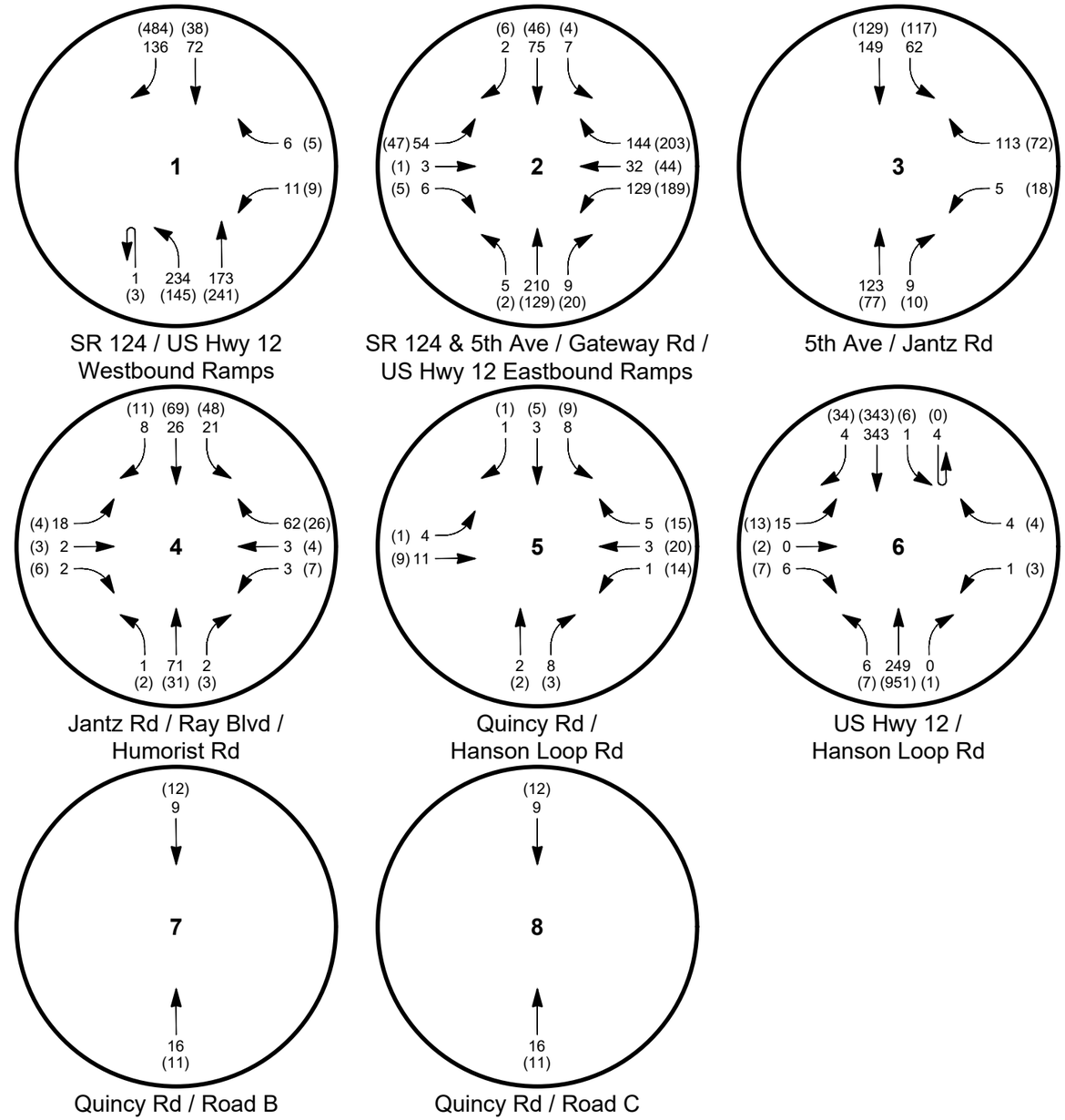

LEGEND

○	INTERSECTION
XXX	AM PEAK HOUR
(XXX)	PM PEAK HOUR

NTS

FIGURE 4

2022 Existing Volumes

Huntsman's Estates

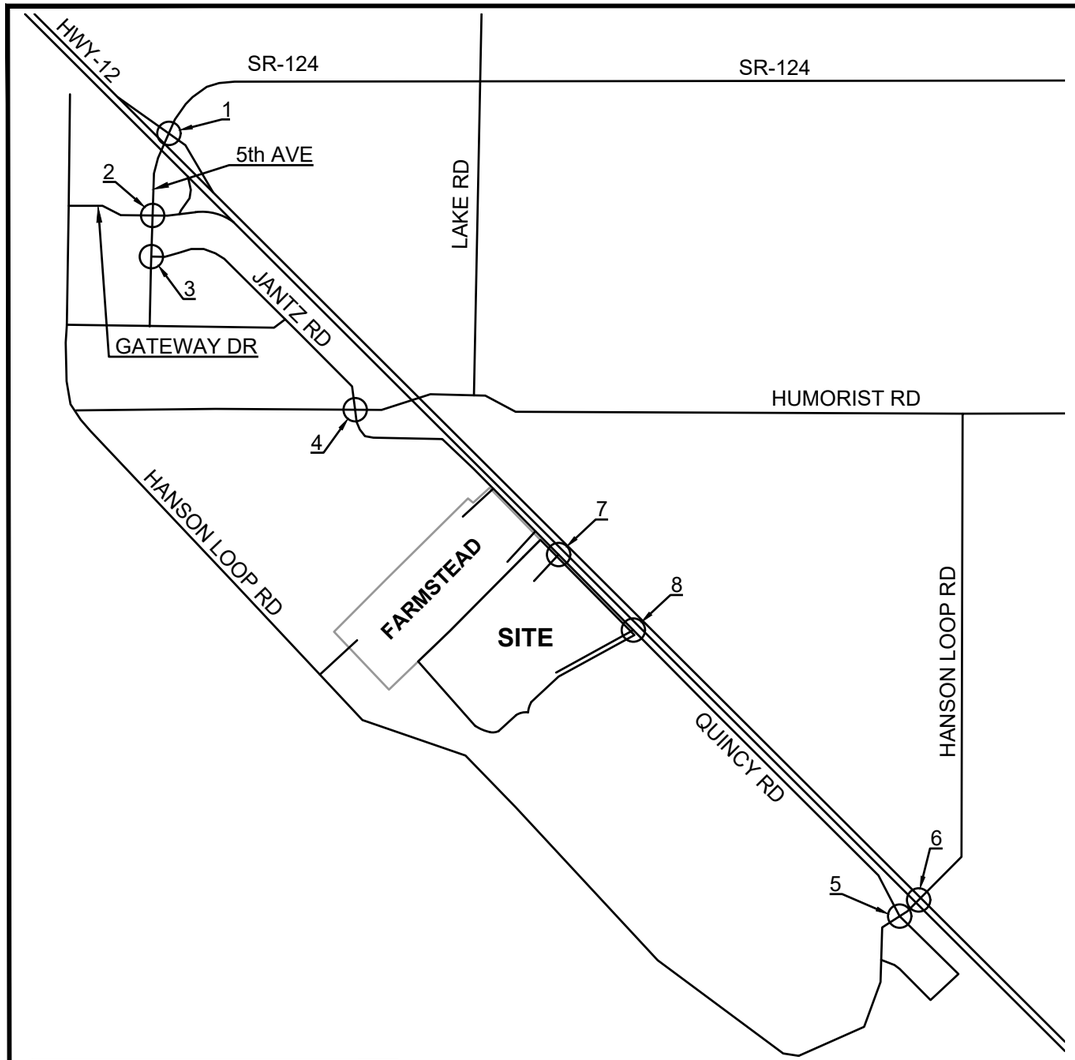

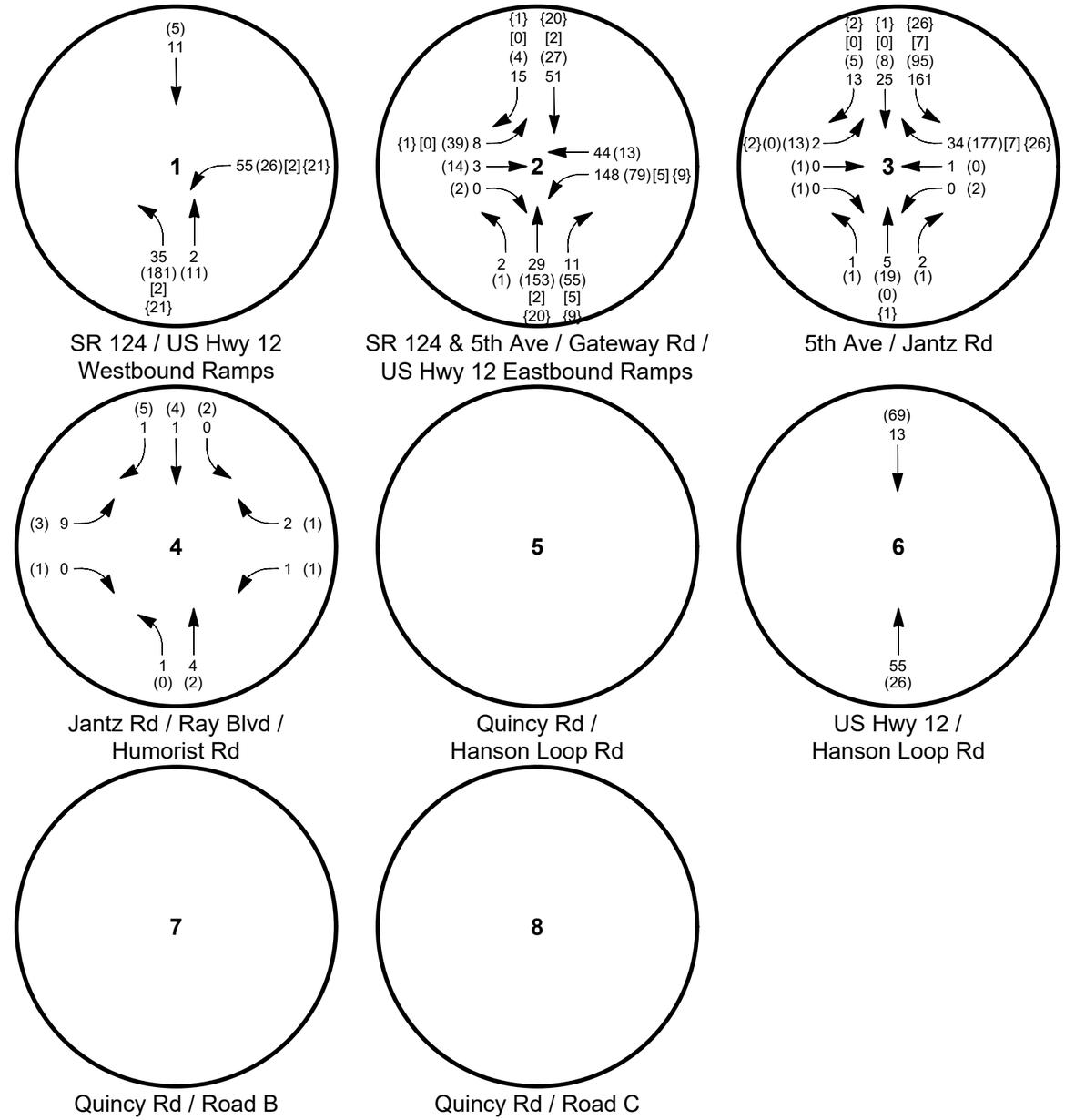

LEGEND

○	INTERSECTION
XXX	AM PEAK HOUR
(XXX)	PM PEAK HOUR
[XXX]	AM PEAK HOUR PASS-BY TRIPS
{XXX}	PM PEAK HOUR PASS-BY TRIPS

NTS

FIGURE 5

2025 In-Process Trips and Pass-By Trips

Huntsman's Estates

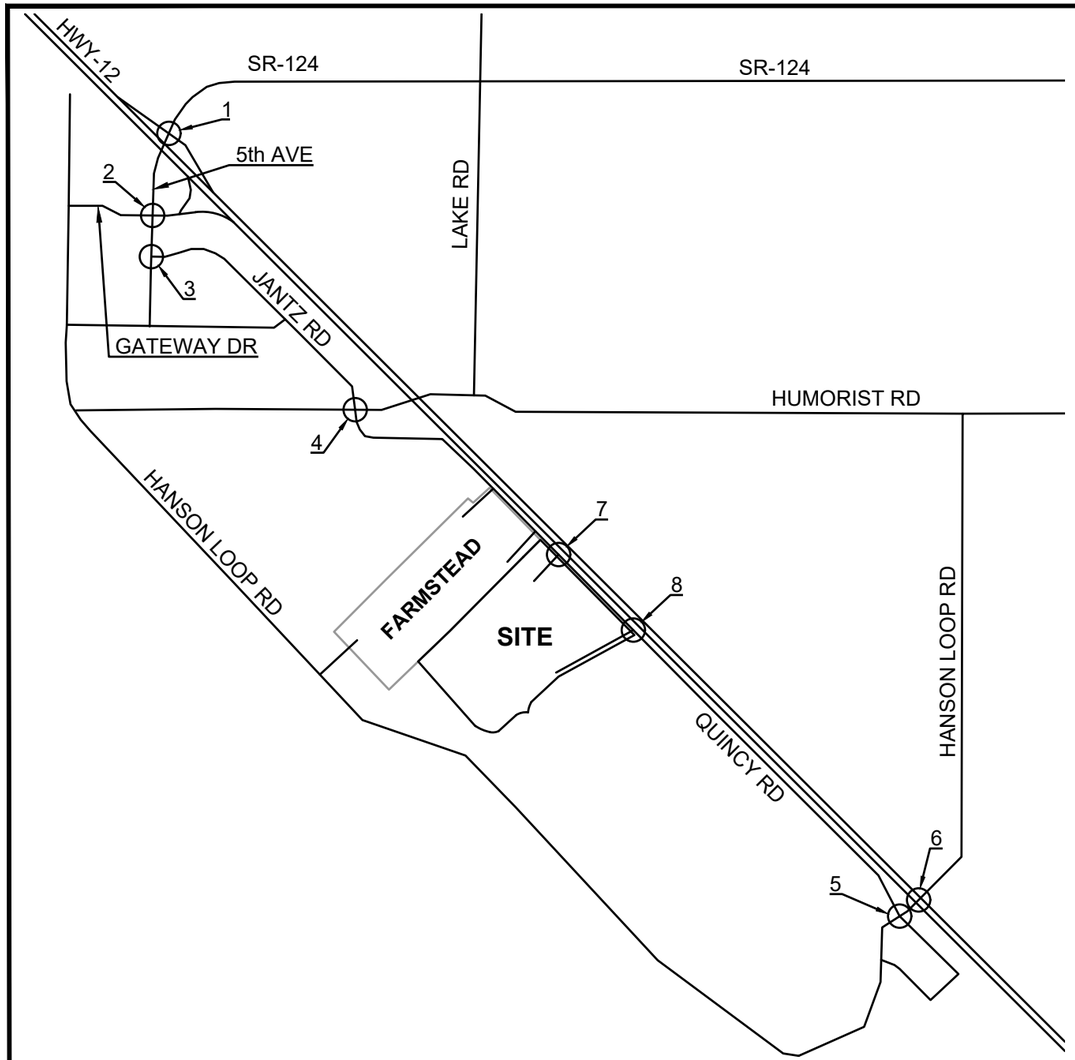

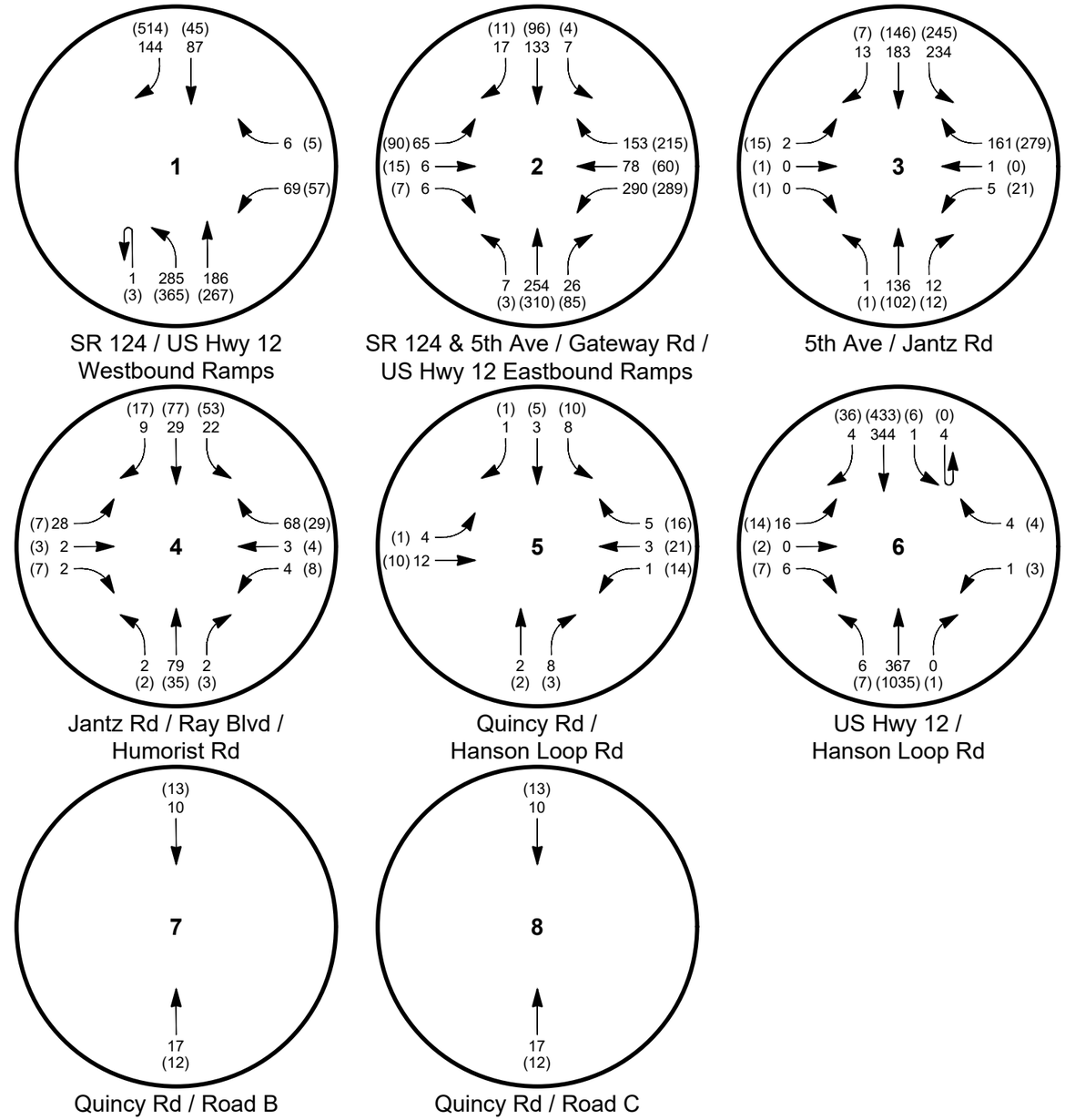

LEGEND

○	INTERSECTION
XXX	AM PEAK HOUR
(XXX)	PM PEAK HOUR

NTS

FIGURE 6

2025 Without Project Volumes

Huntsman's Estates

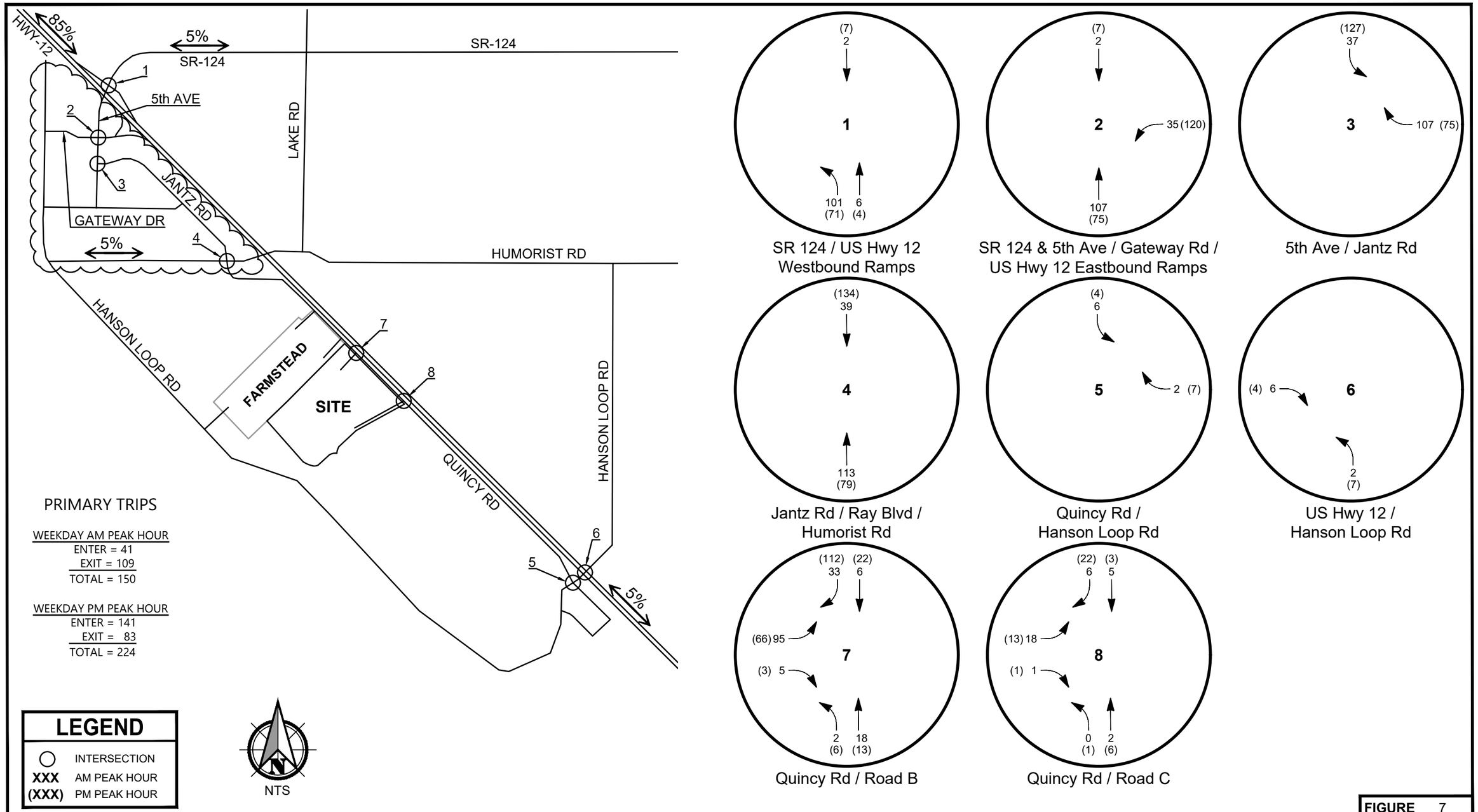

FIGURE 7

Trip Distribution and Assignment (Phase 1 of Huntsman's Estates)

Huntsman's Estates

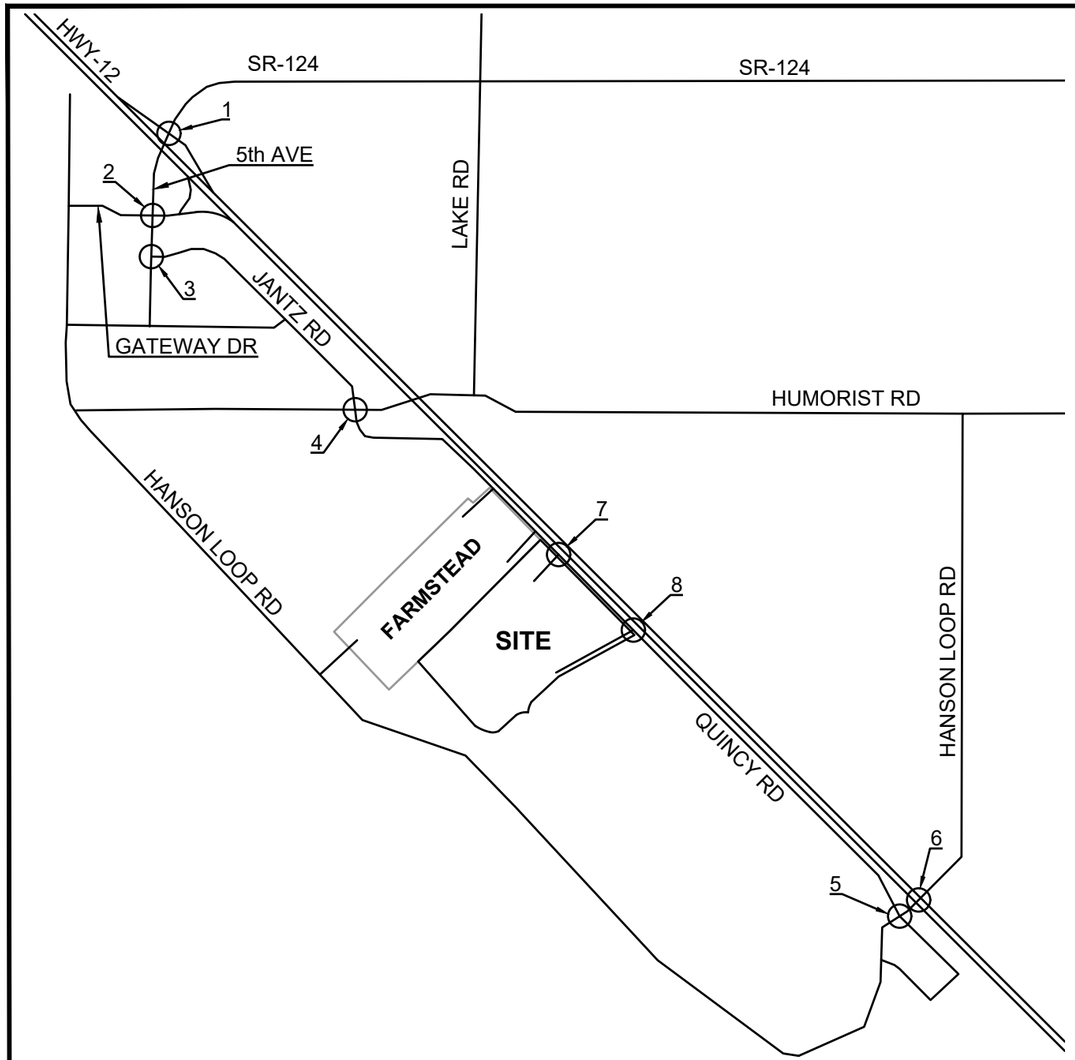

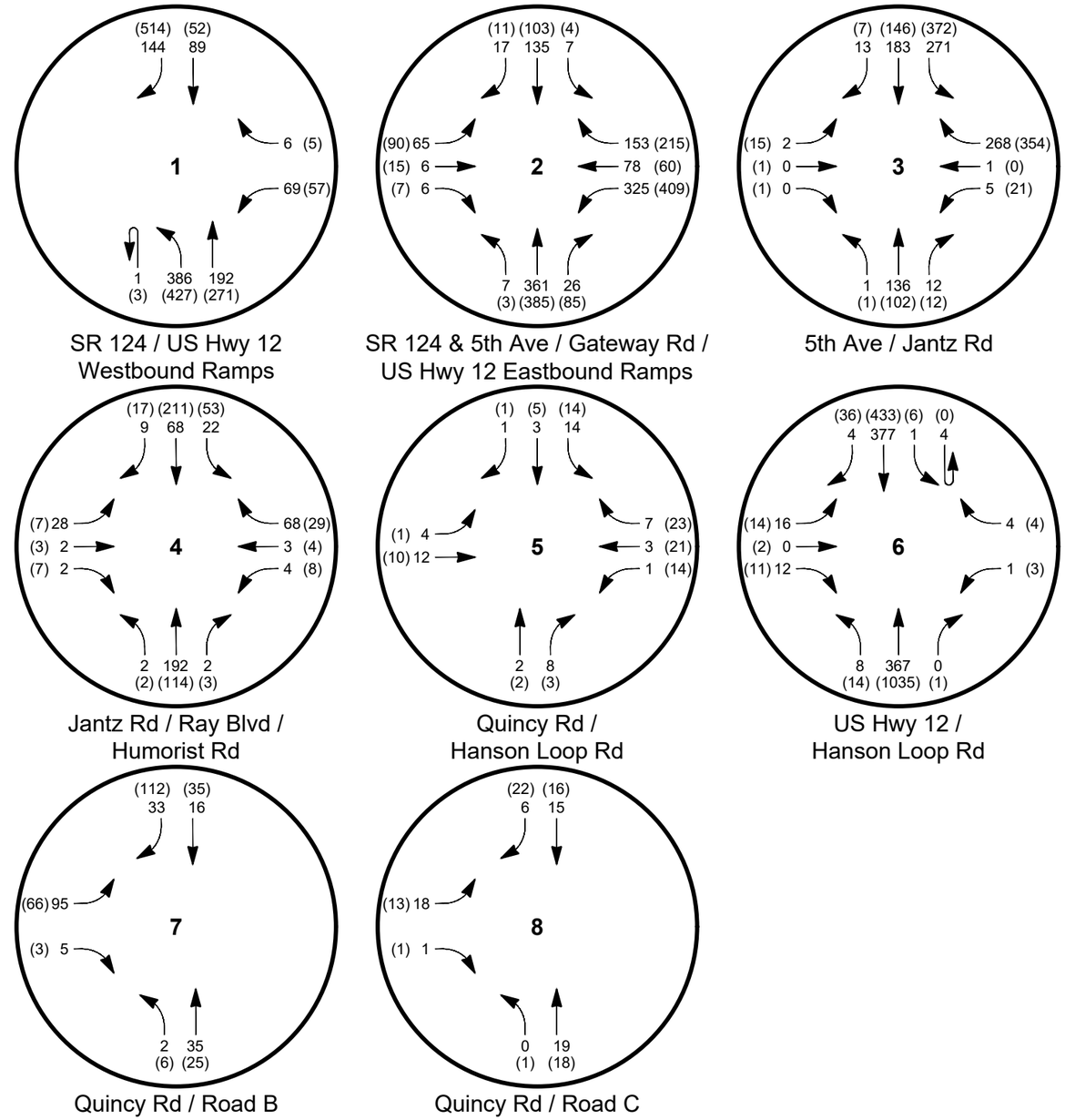

LEGEND

○	INTERSECTION
XXX	AM PEAK HOUR
(XXX)	PM PEAK HOUR

N
NTS

FIGURE 8

2025 With Project Volumes (Phase 1 of Huntsman's Estates)

Huntsman's Estates

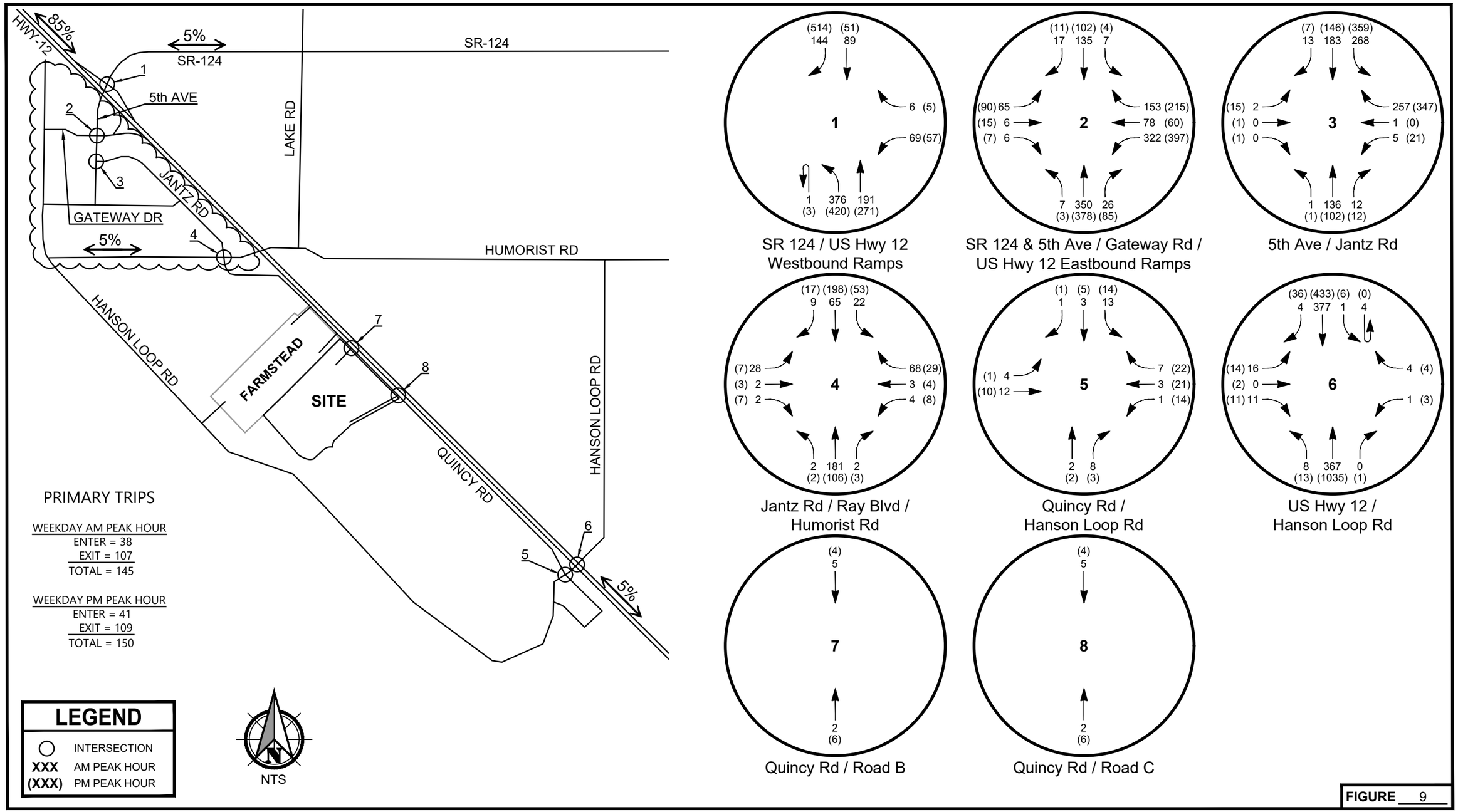

FIGURE 9

Trip Distribution and Assignment (Phase 1 of Farmstead)

Huntsman's Estates

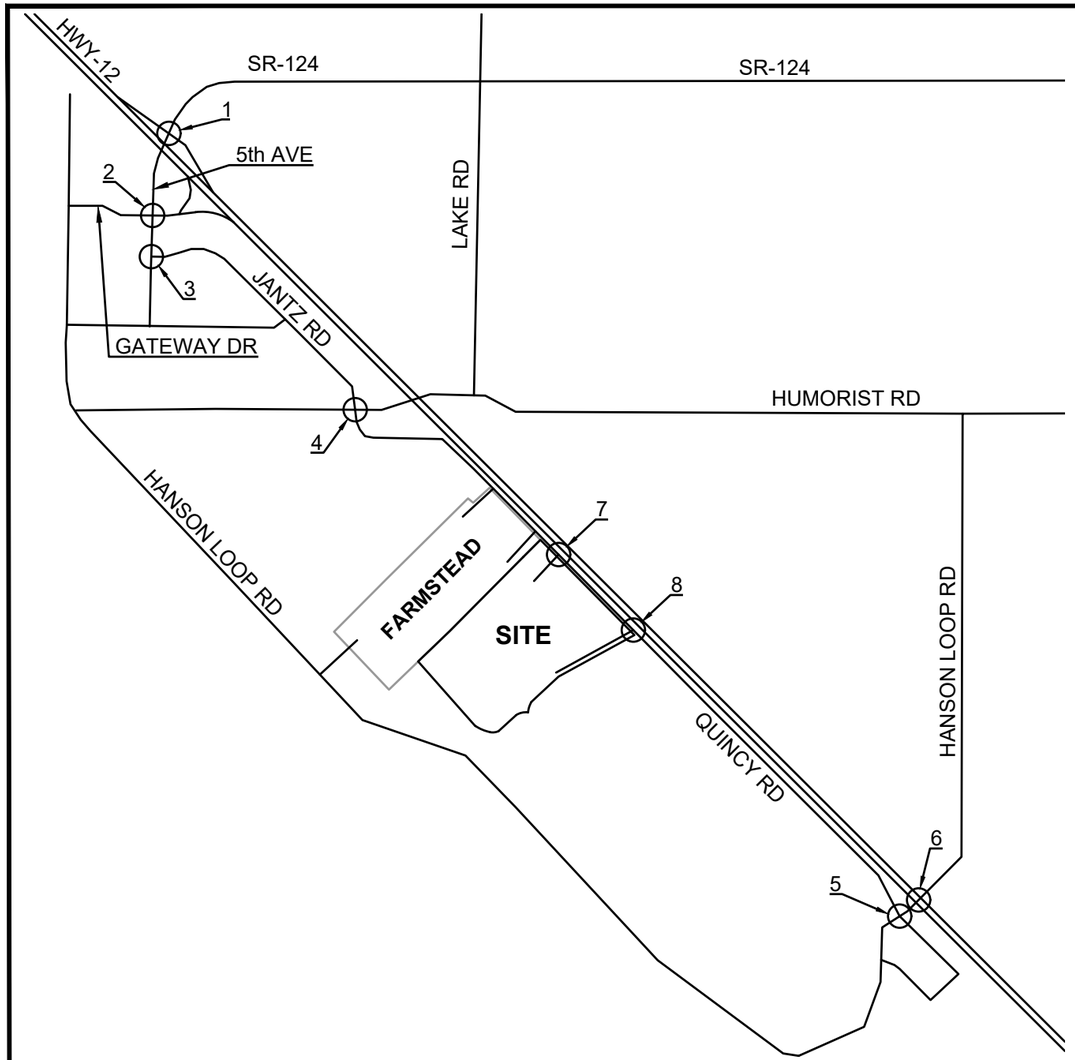

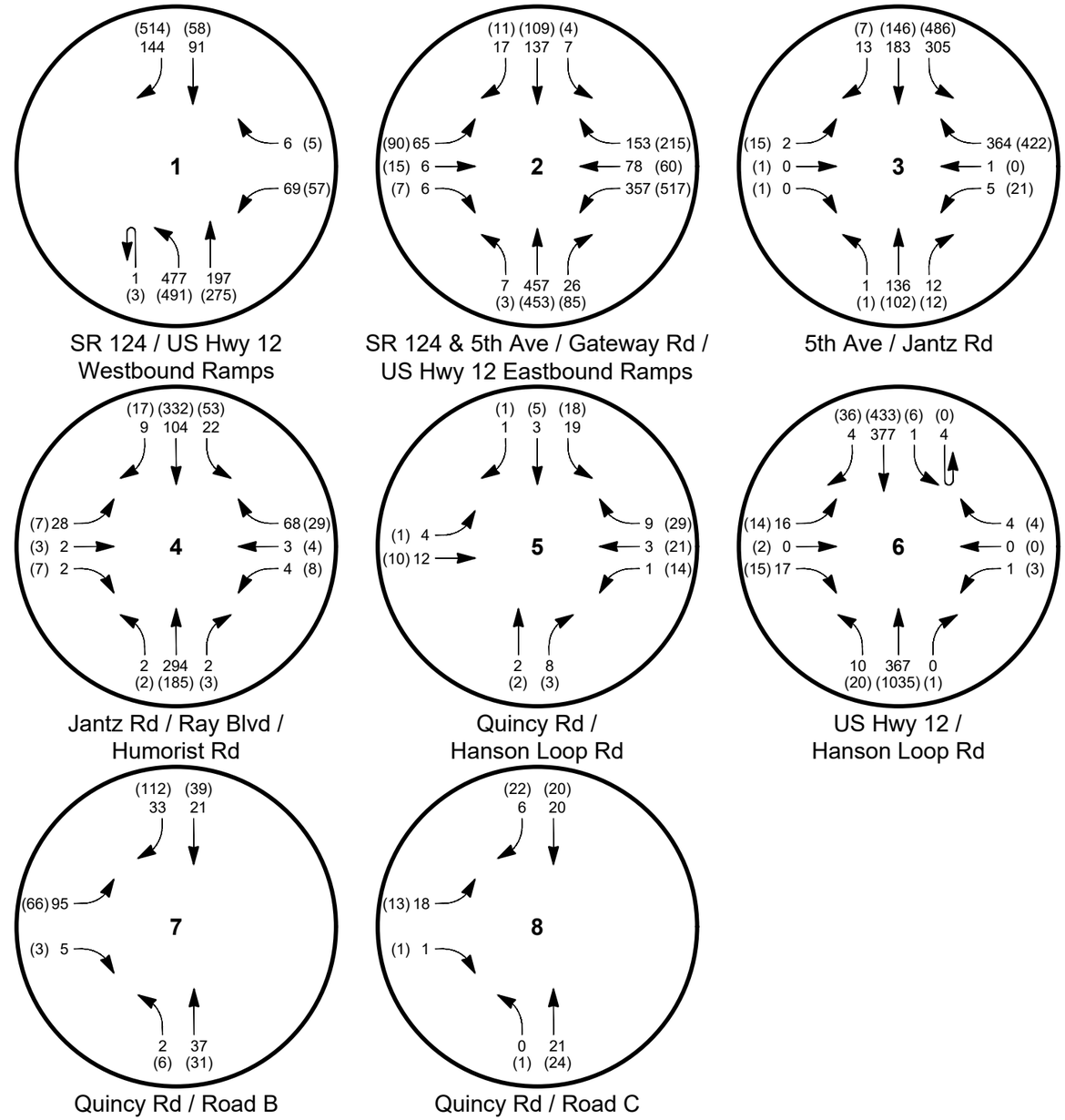

LEGEND

○	INTERSECTION
XXX	AM PEAK HOUR
(XXX)	PM PEAK HOUR

NTS

FIGURE 10

2025 With Both Project Volumes (Phase 1 of Farmstead and Huntsman's Estates)

Huntsman's Estates

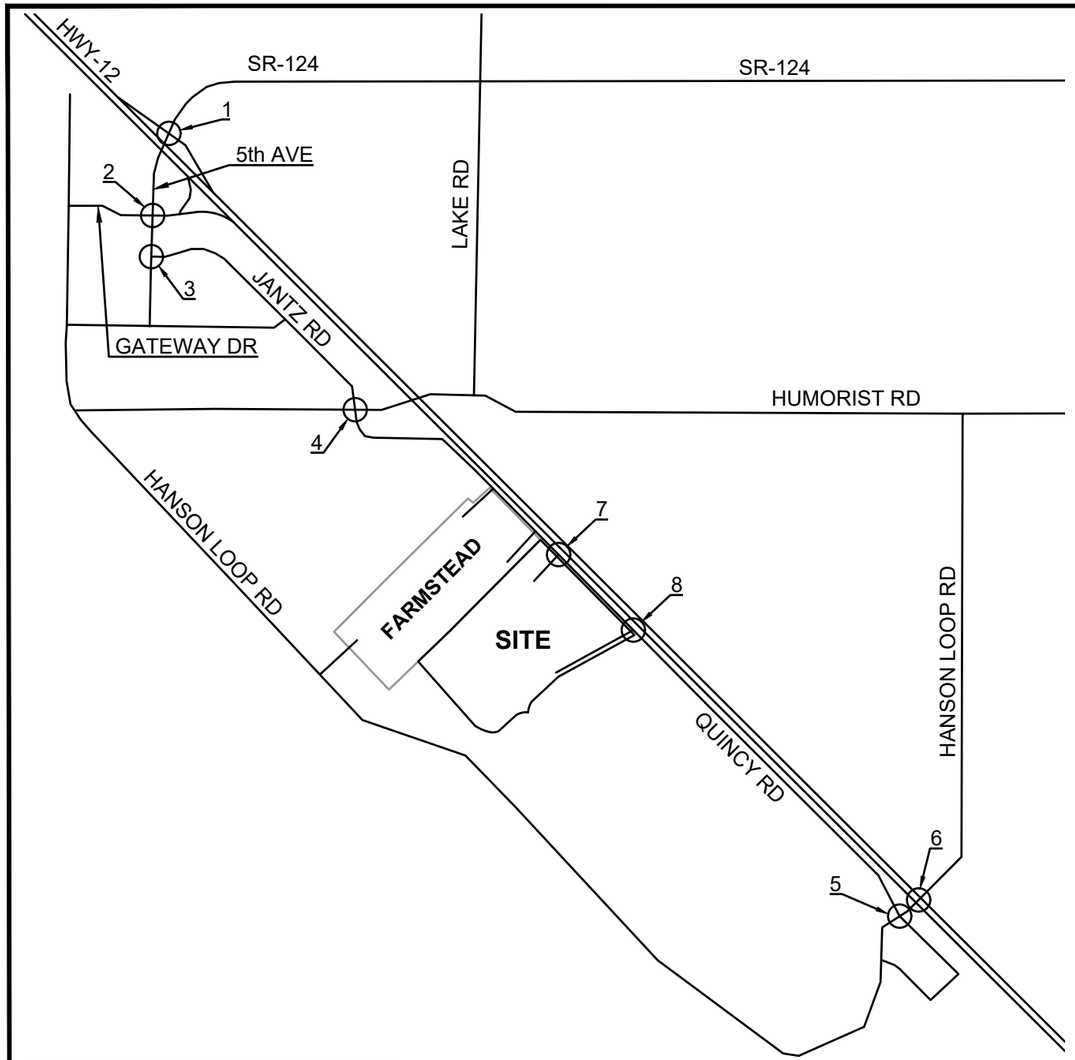

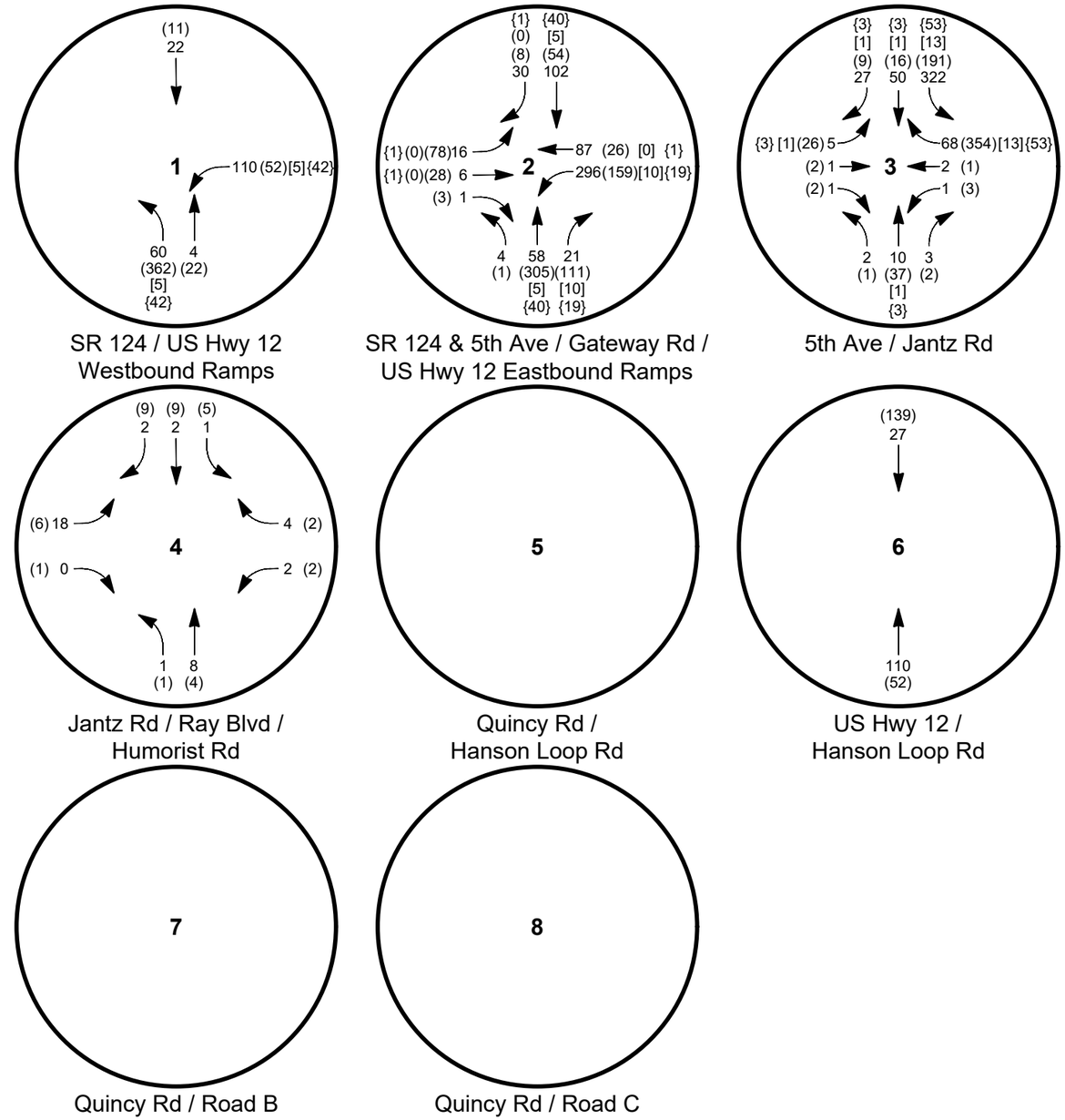

LEGEND

○	INTERSECTION
XXX	AM PEAK HOUR
(XXX)	PM PEAK HOUR
[XXX]	AM PEAK HOUR PASS-BY TRIPS
{XXX}	PM PEAK HOUR PASS-BY TRIPS

NTS

FIGURE 11

2028 In-Process Trips and Pass-By Trips

Huntsman's Estates

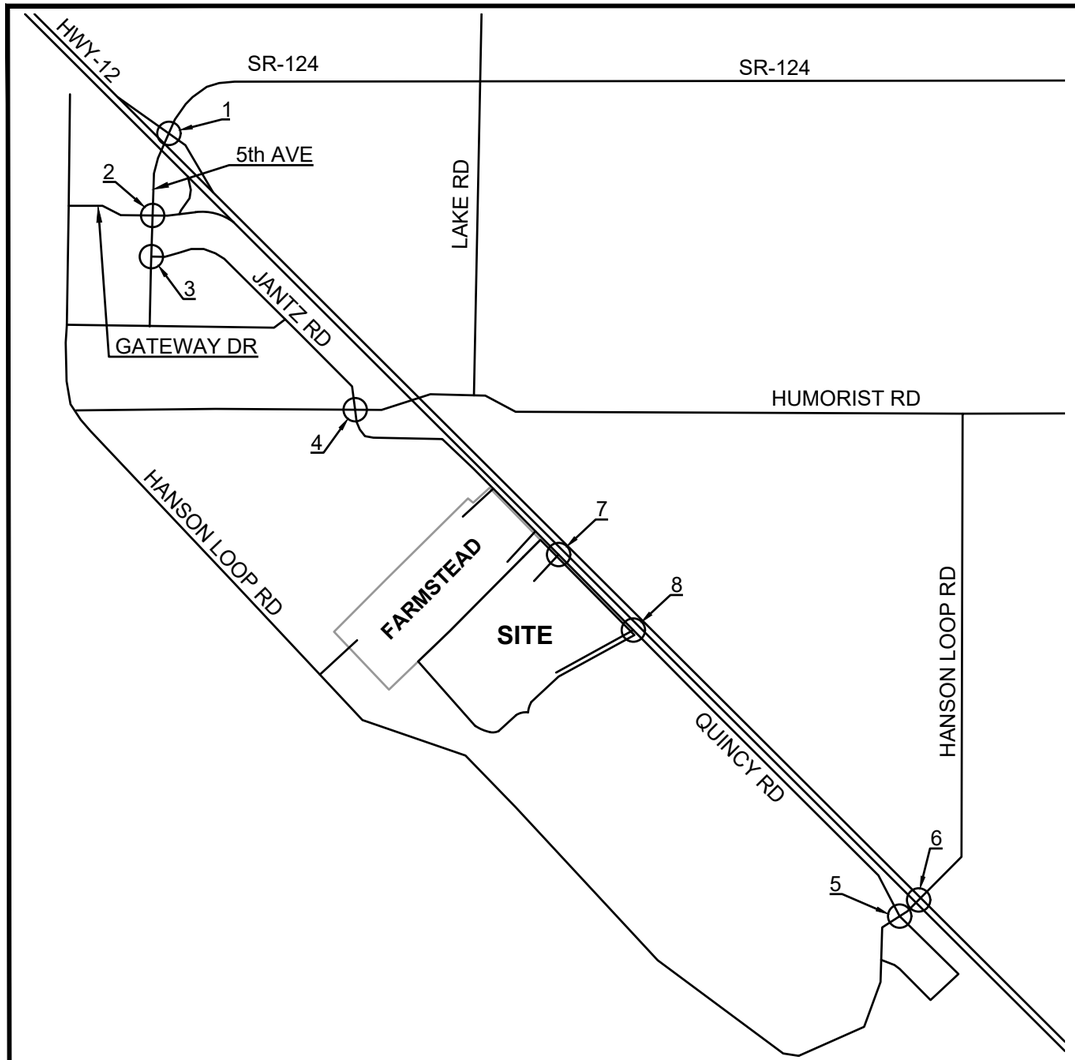

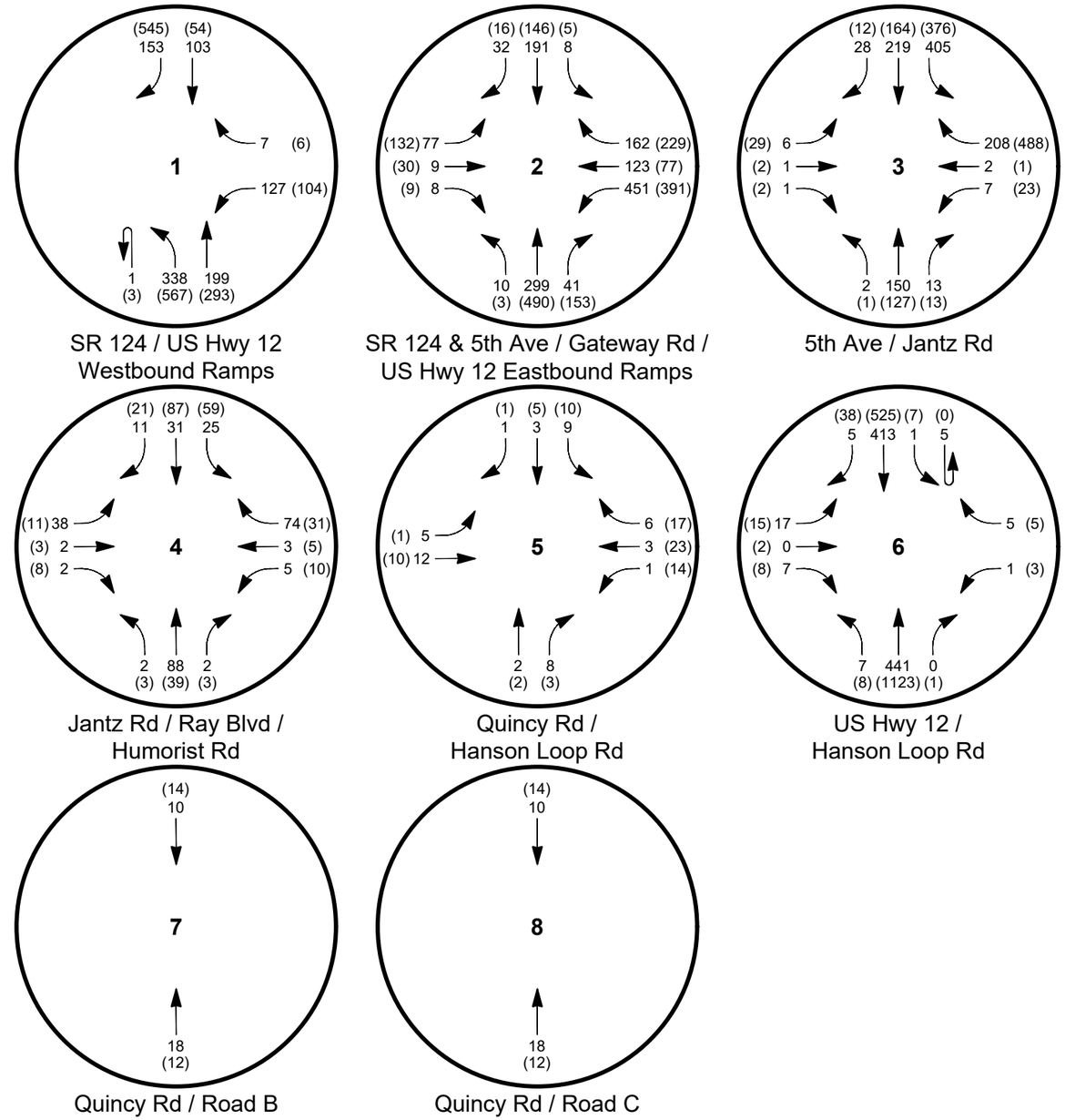

LEGEND

○	INTERSECTION
XXX	AM PEAK HOUR
(XXX)	PM PEAK HOUR

NTS

FIGURE 12

2028 Without Project Volumes

Huntsman's Estates

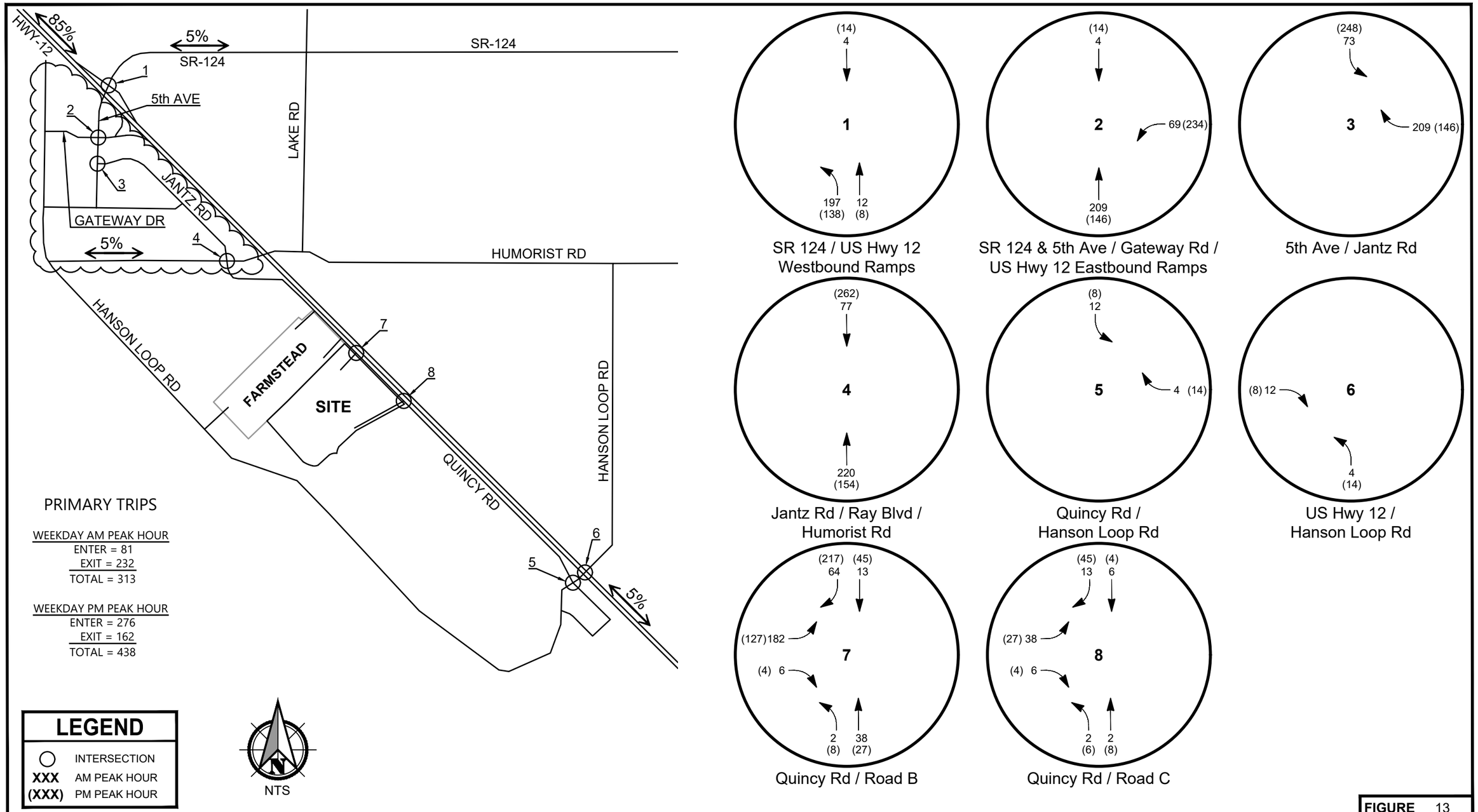

FIGURE 13

Trip Distribution and Assignment (Phases 1 and 2 of Huntsman's Estates)

Huntsman's Estates

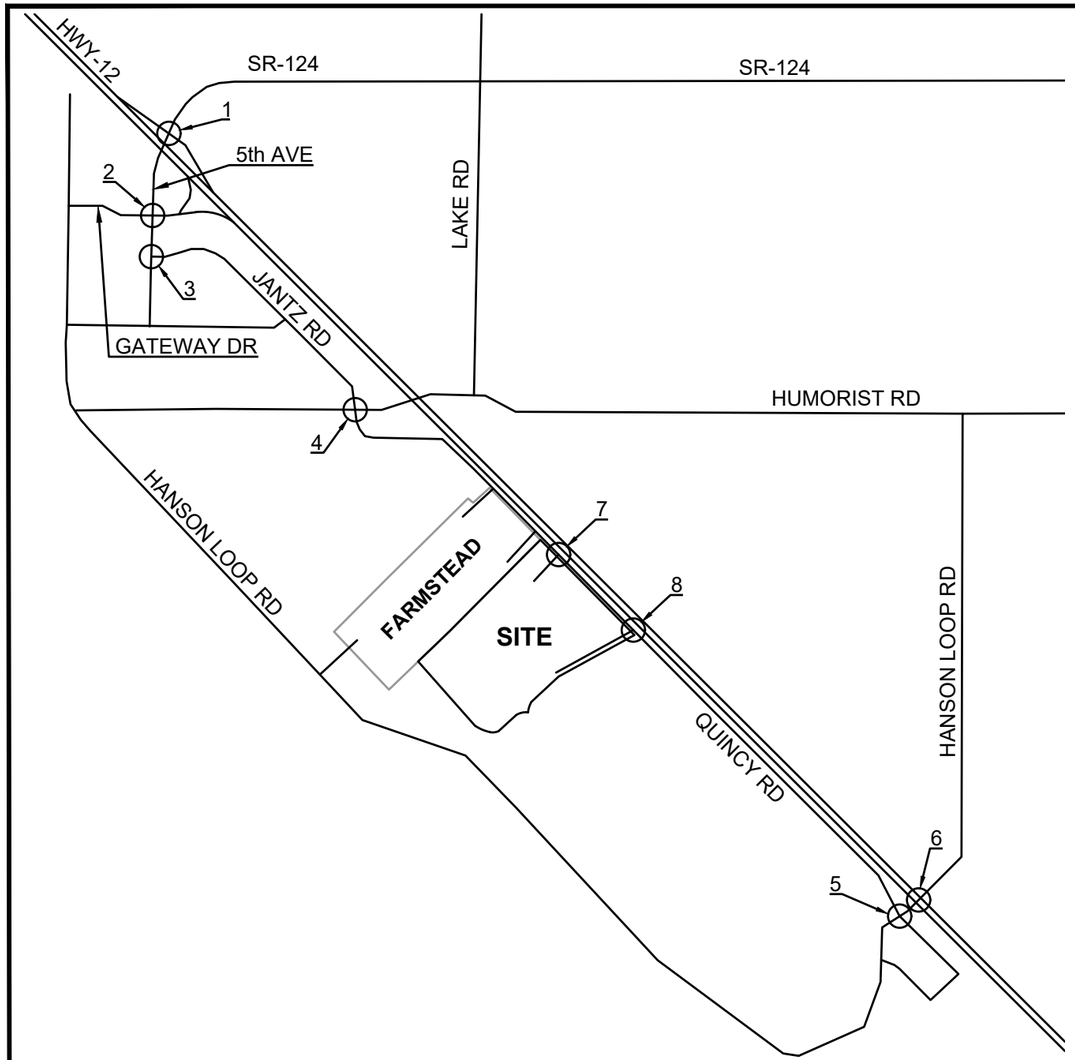

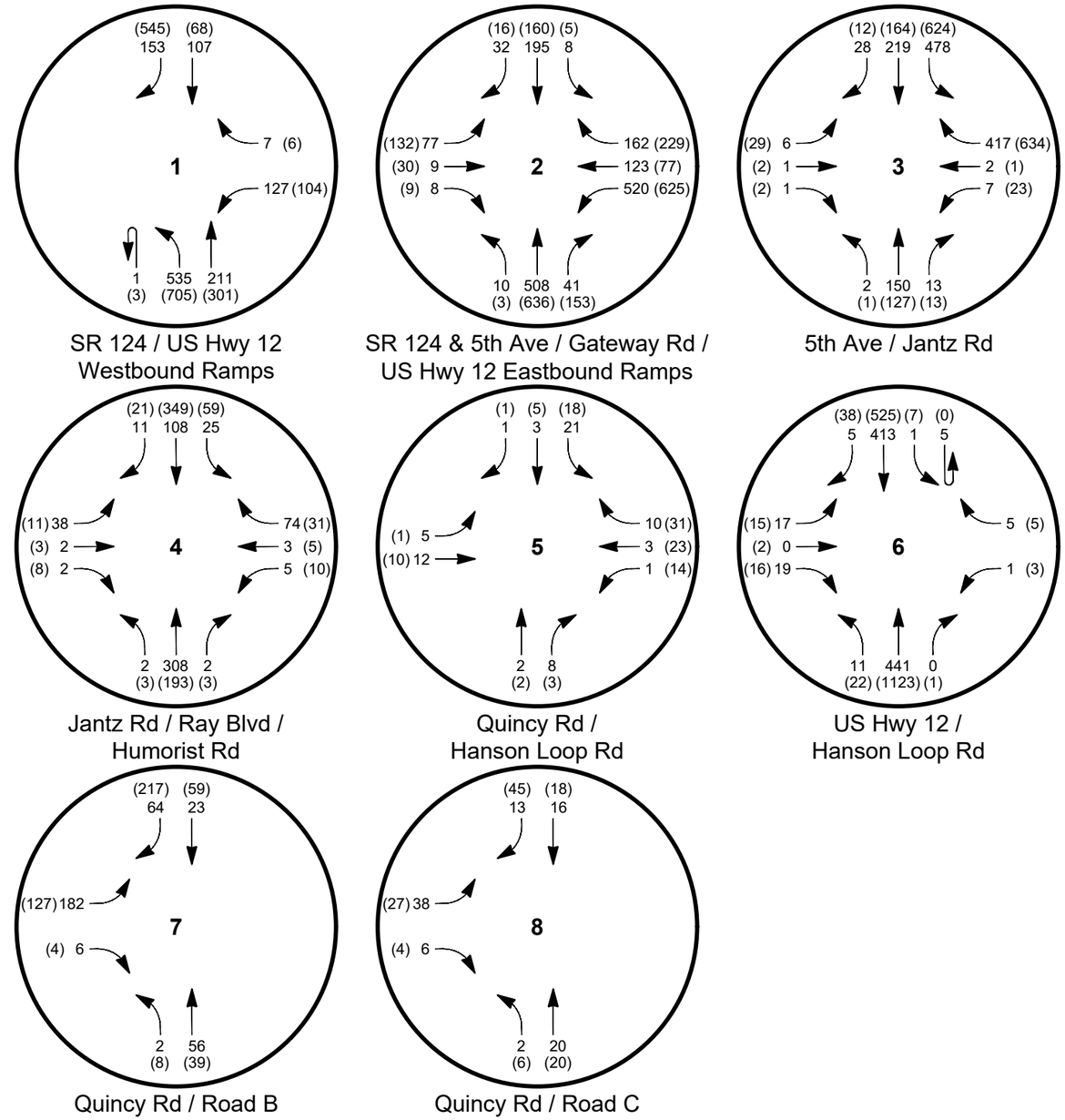

LEGEND

○	INTERSECTION
XXX	AM PEAK HOUR
(XXX)	PM PEAK HOUR

N
NTS

FIGURE 14

2028 With Project Volumes (Phases 1 and 2 of Huntsman's Estates)

Huntsman's Estates

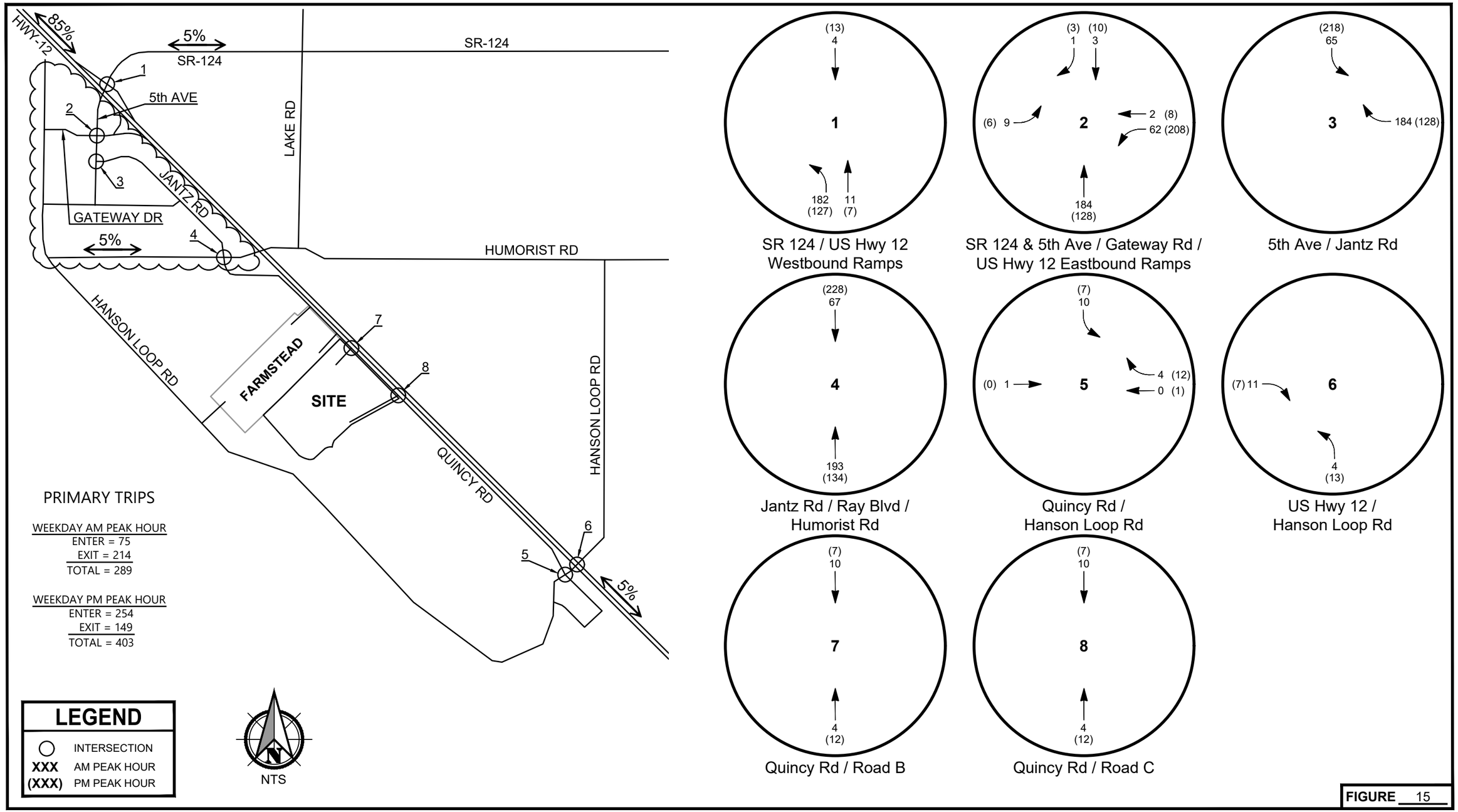

FIGURE 15

Trip Distribution and Assignment (Phase 1 and 2 of Farmstead)

Huntsman's Estates

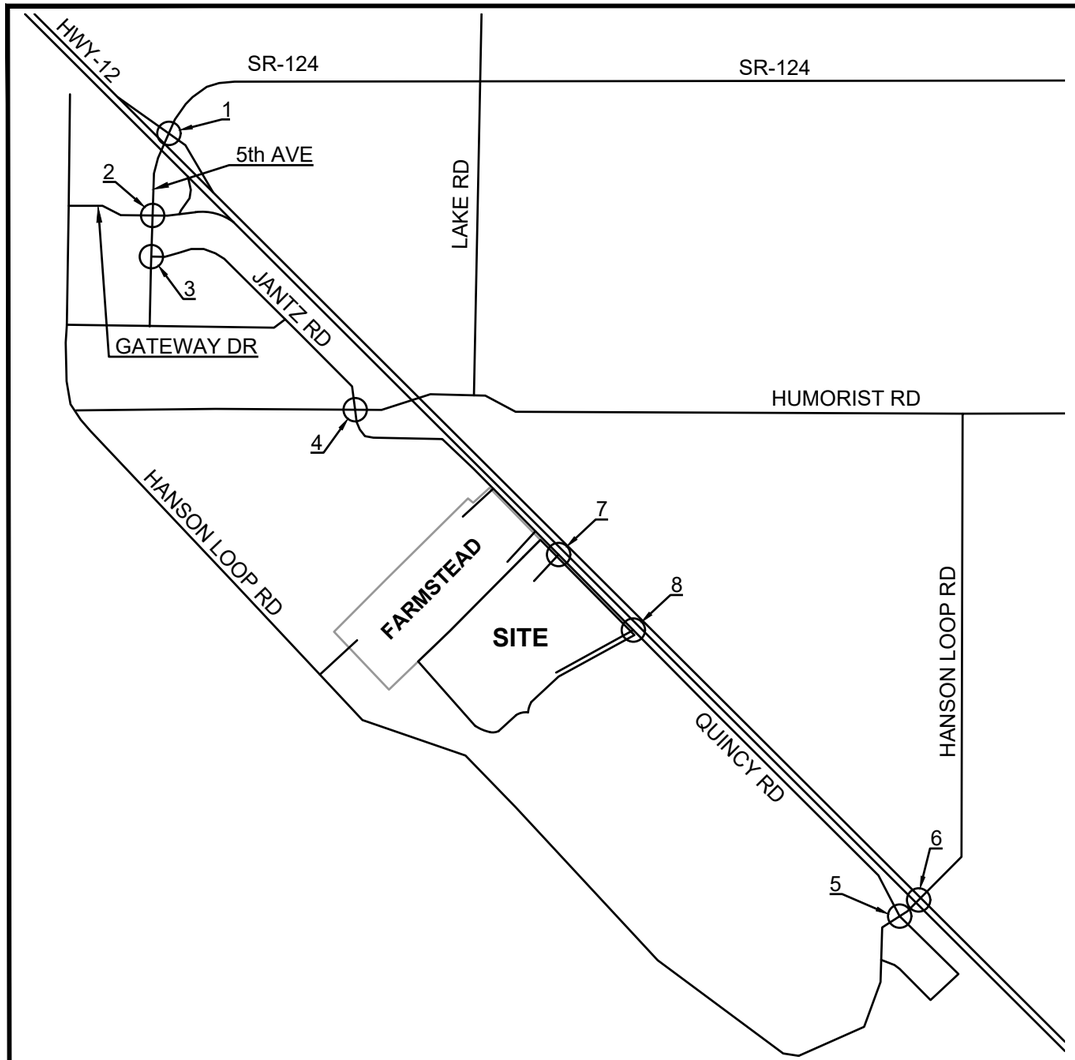

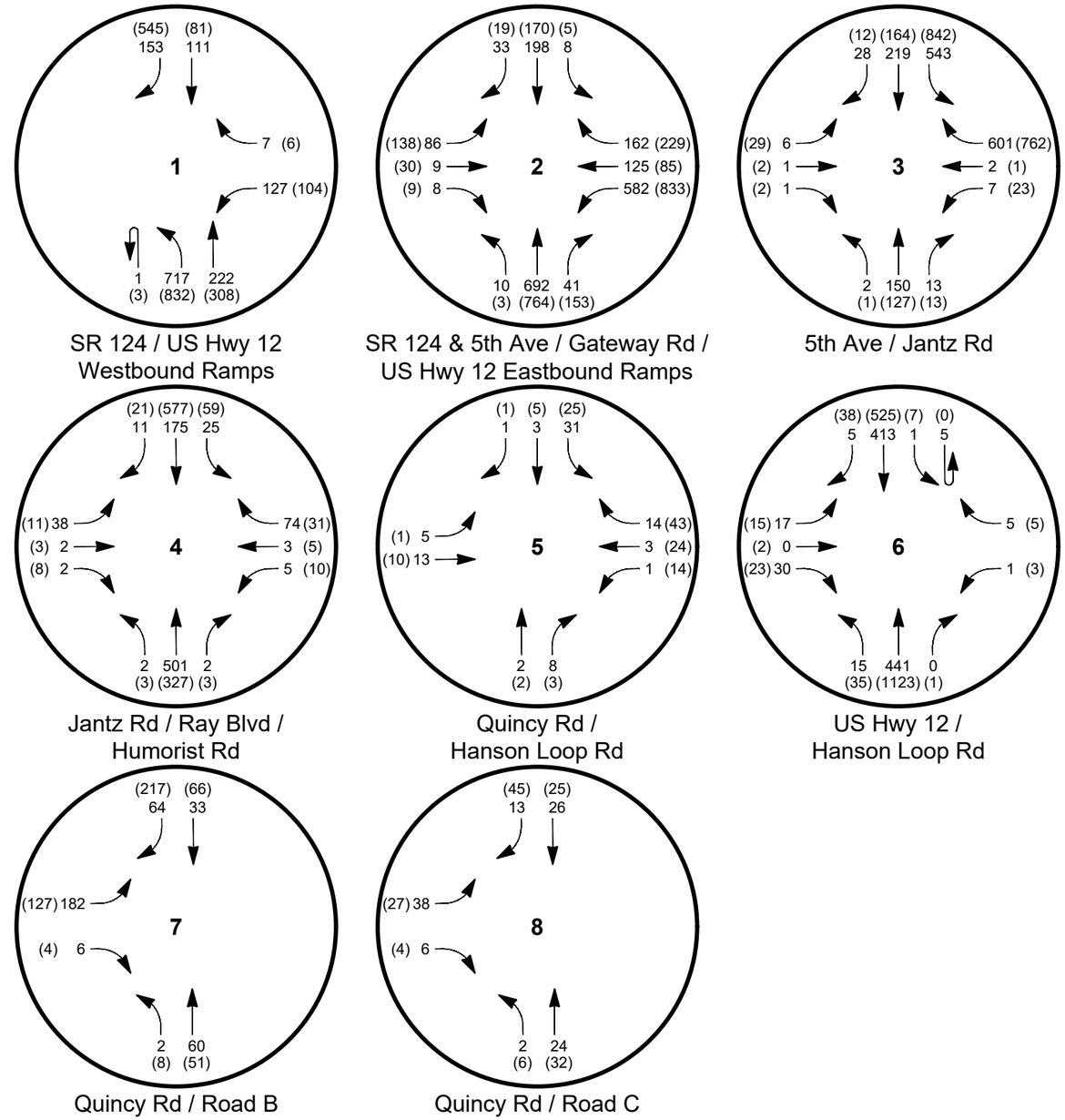

LEGEND

○	INTERSECTION
XXX	AM PEAK HOUR
(XXX)	PM PEAK HOUR

N
NTS

FIGURE 16

2028 With Both Project Volumes (Phase 1 and 2 of Farmstead and Huntsman's Estates)

Huntsman's Estates

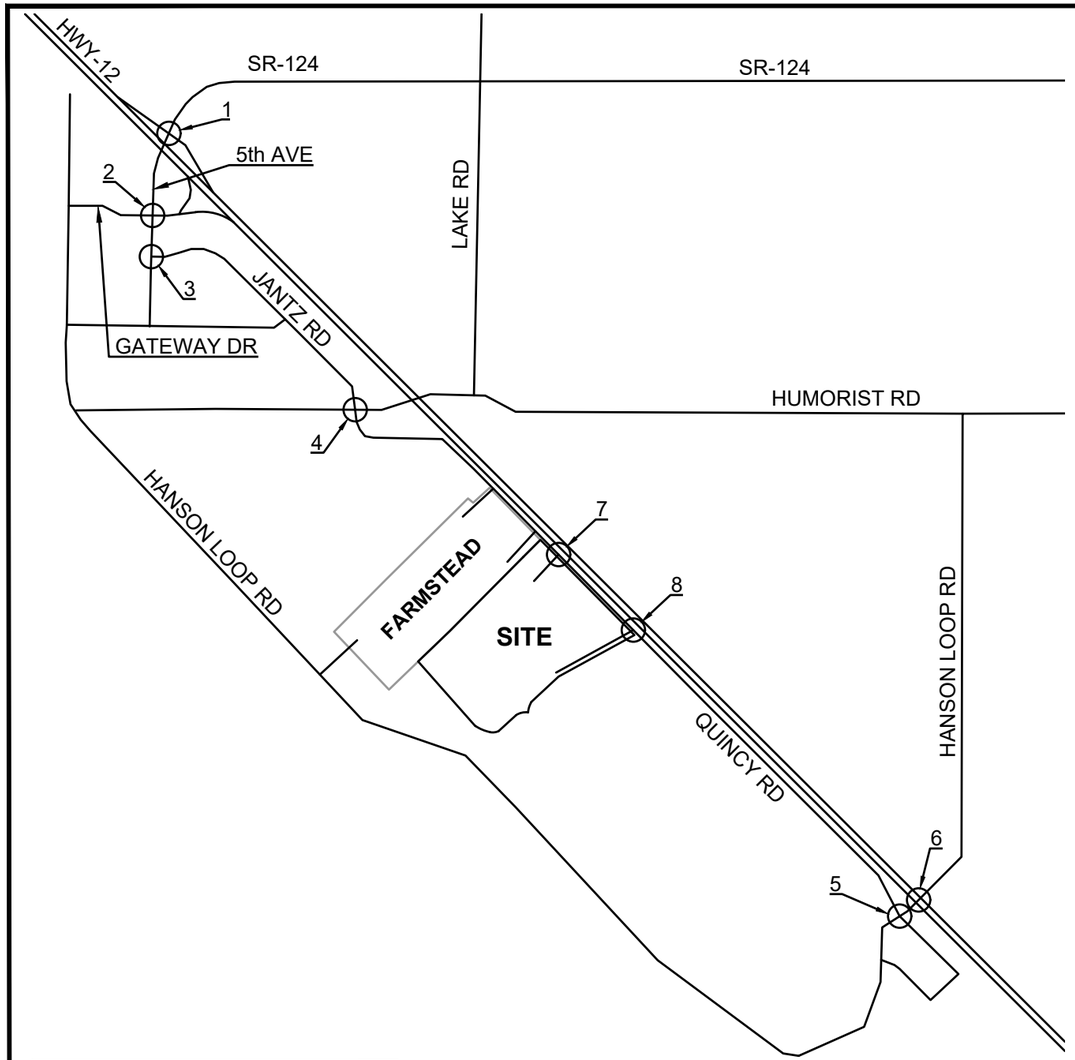

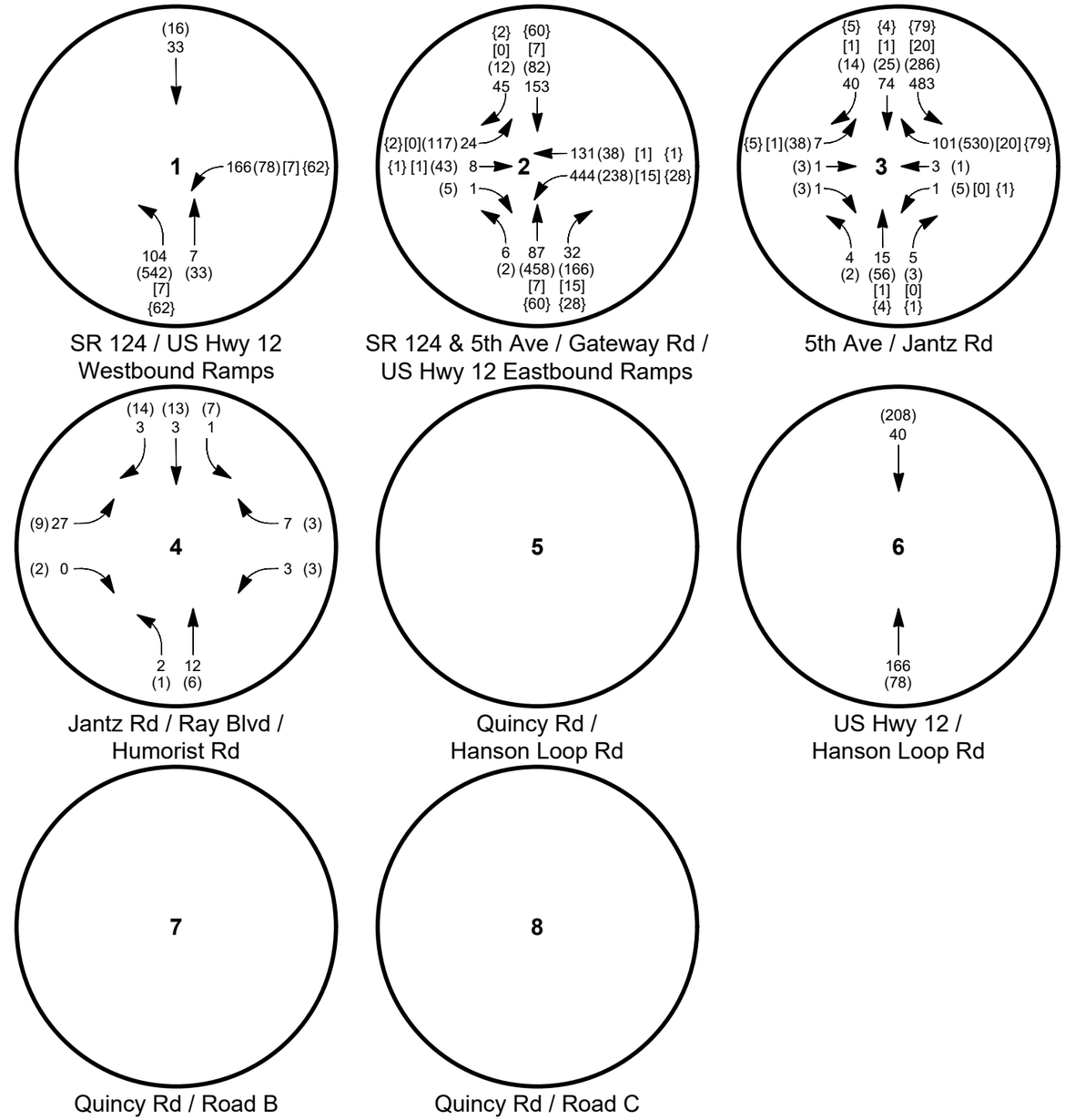

LEGEND

○	INTERSECTION
XXX	AM PEAK HOUR
(XXX)	PM PEAK HOUR
[XXX]	AM PEAK HOUR PASS-BY TRIPS
{XXX}	PM PEAK HOUR PASS-BY TRIPS

NTS

FIGURE 17

2033 In-Process Trips and Pass-By Trips

Huntsman's Estates

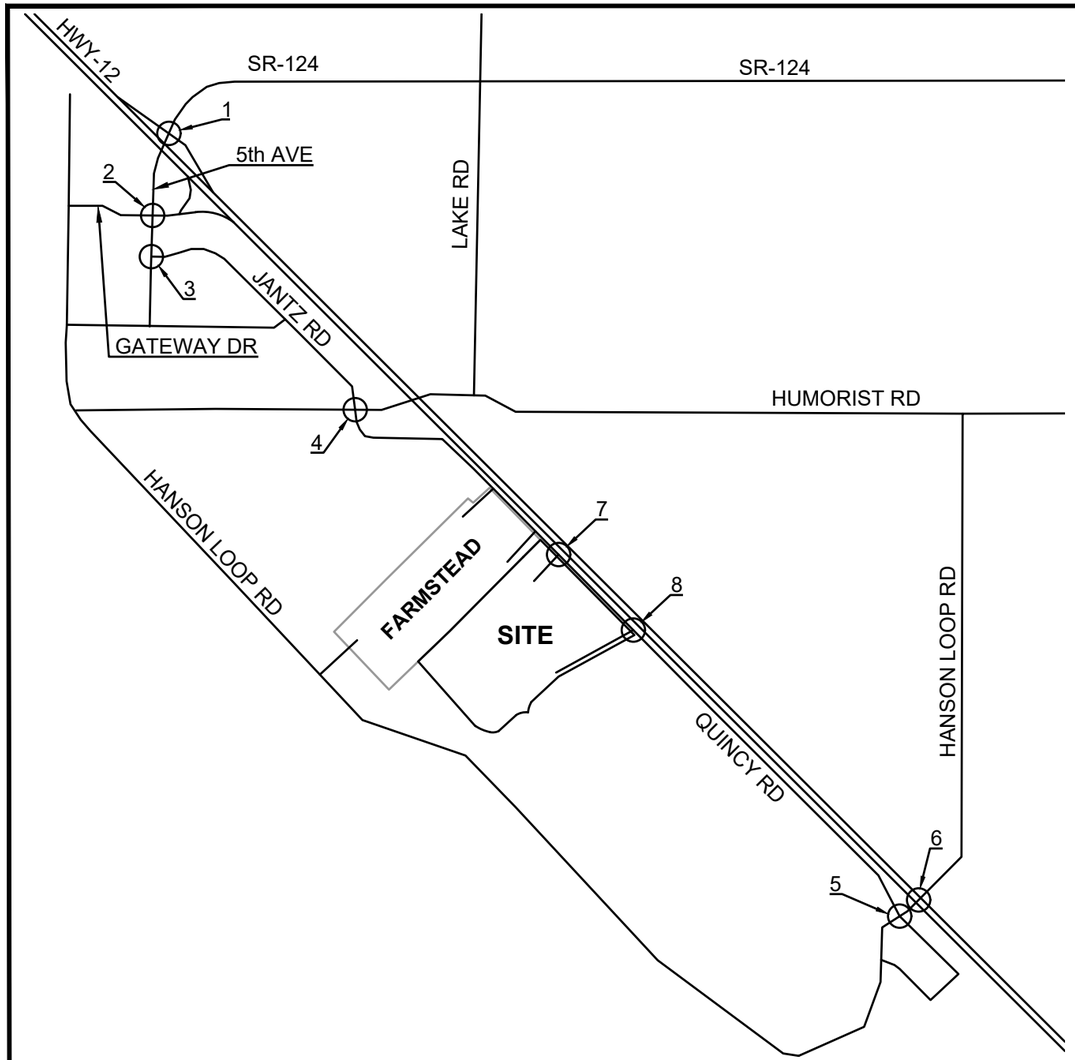

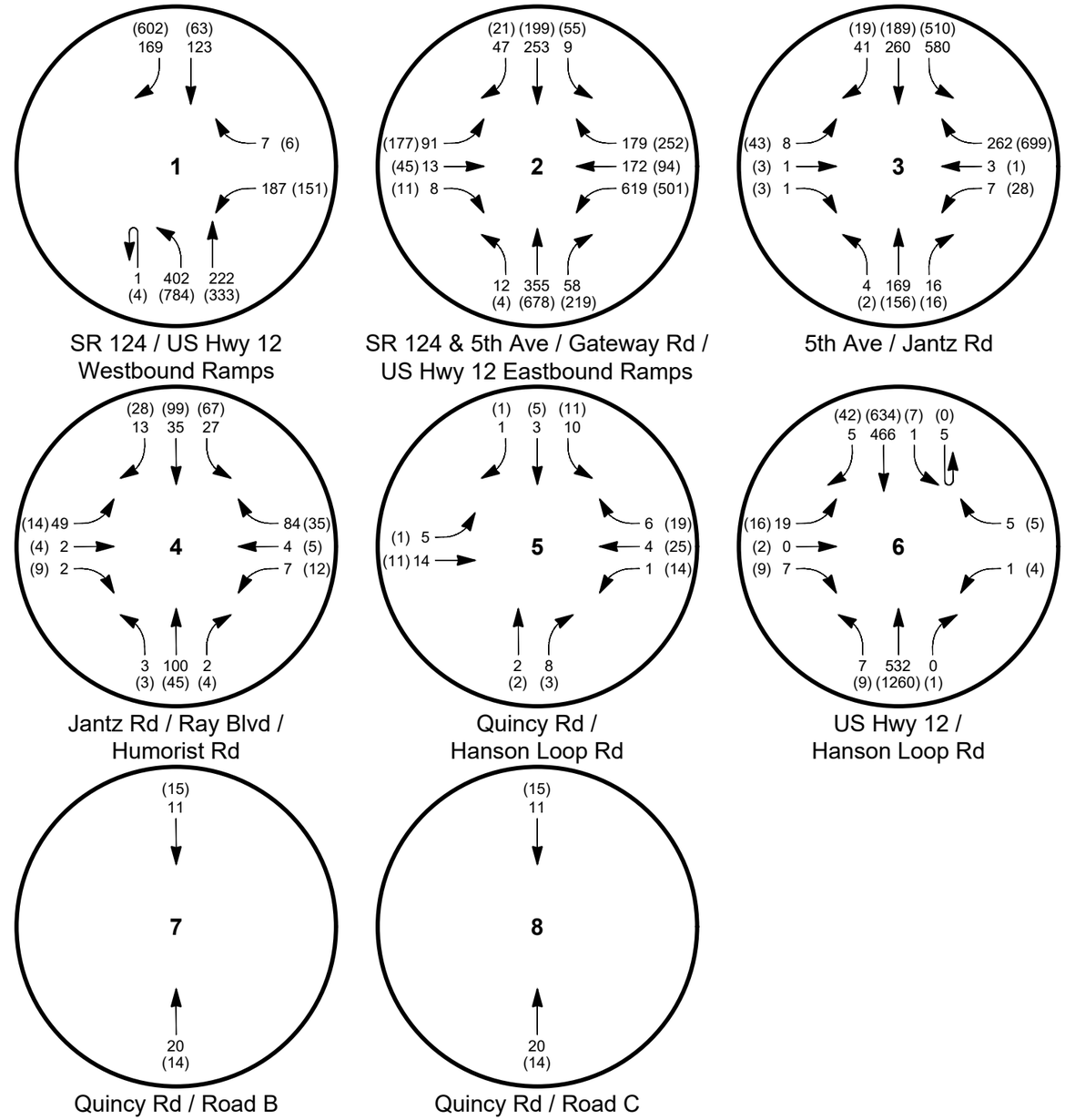

LEGEND

○	INTERSECTION
XXX	AM PEAK HOUR
(XXX)	PM PEAK HOUR

NTS

FIGURE 18

2033 Without Project Volumes

Huntsman's Estates

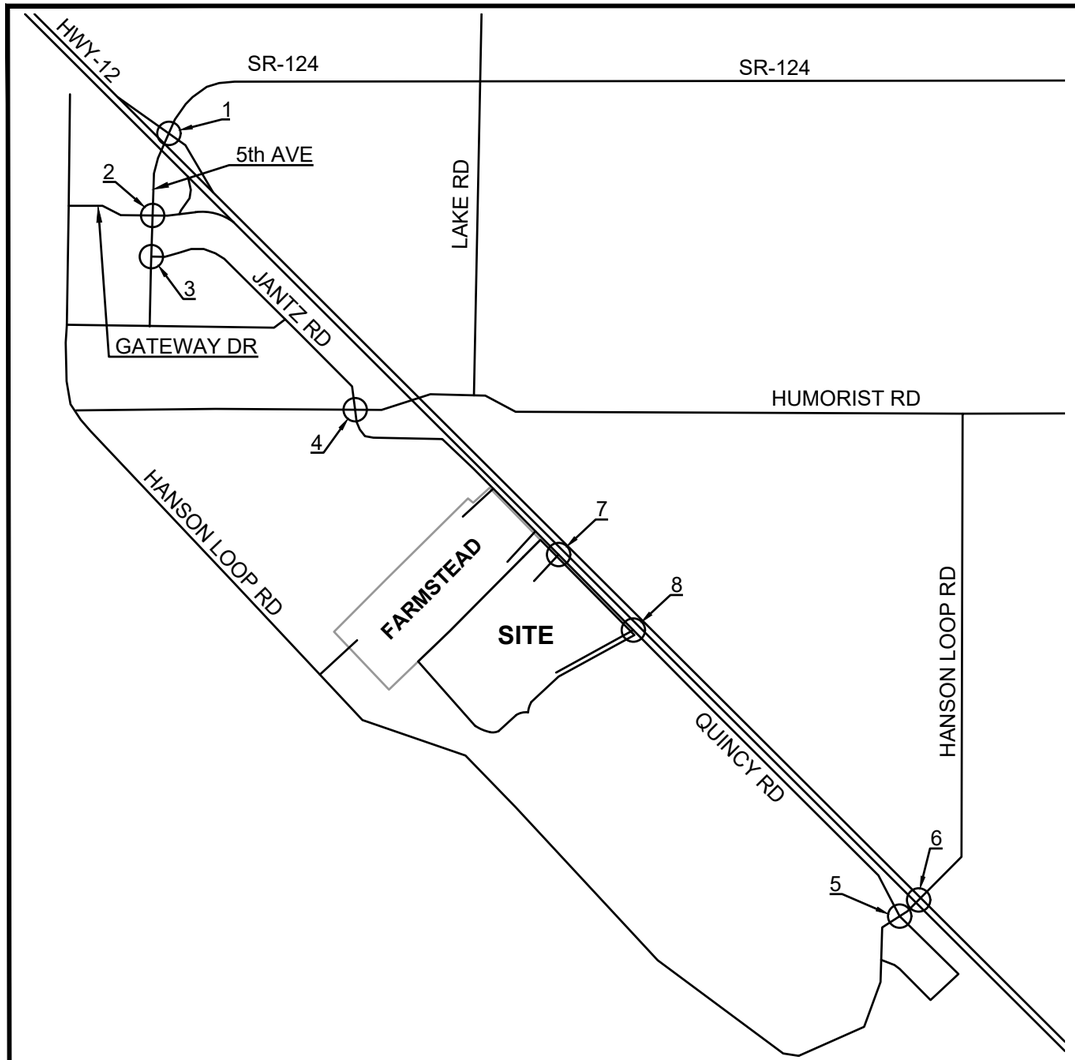

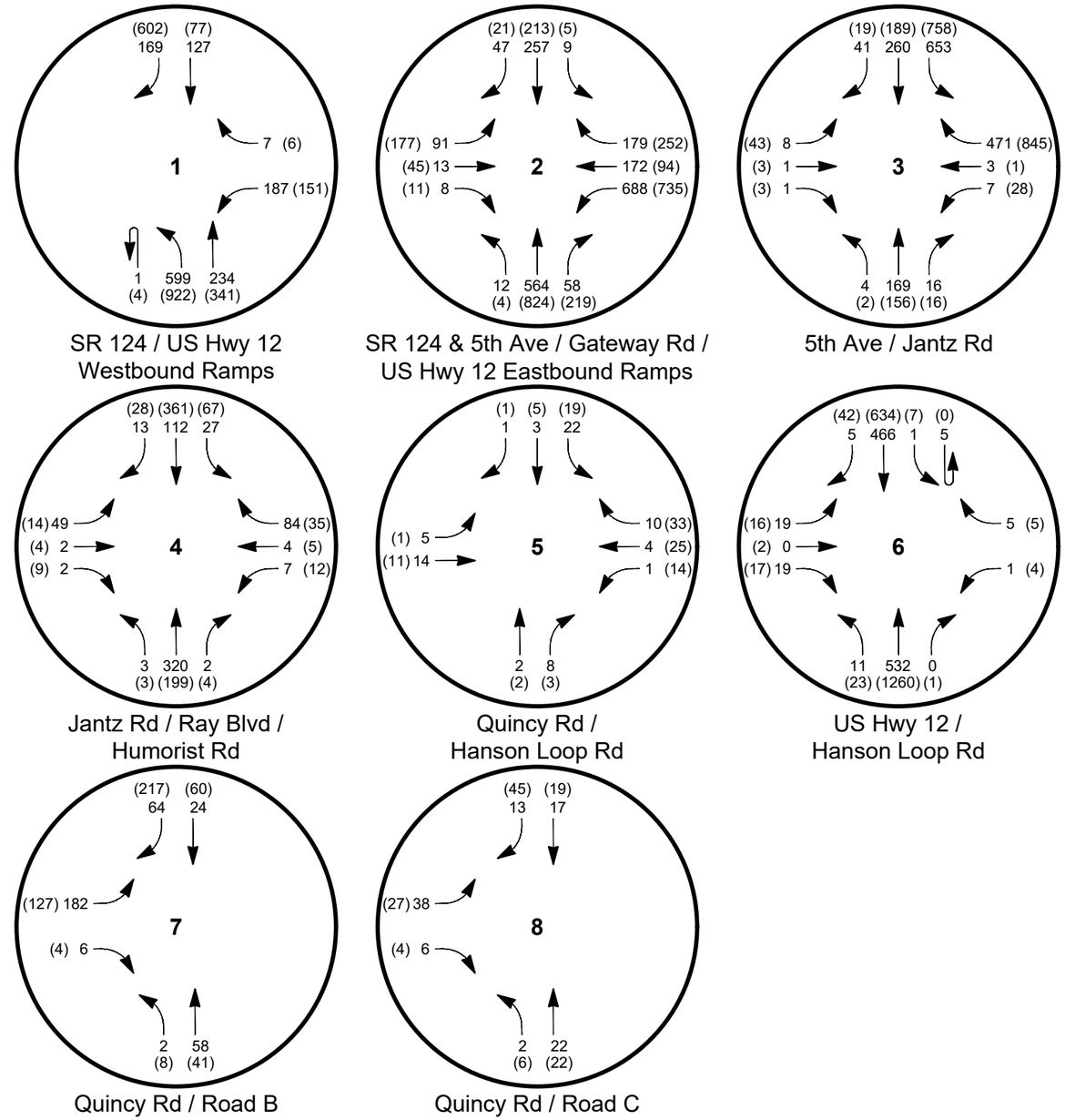

LEGEND

○	INTERSECTION
XXX	AM PEAK HOUR
(XXX)	PM PEAK HOUR

N
NTS

FIGURE 19

2033 With Project Volumes (Phases 1 and 2 of Huntsman's Estates)

Huntsman's Estates

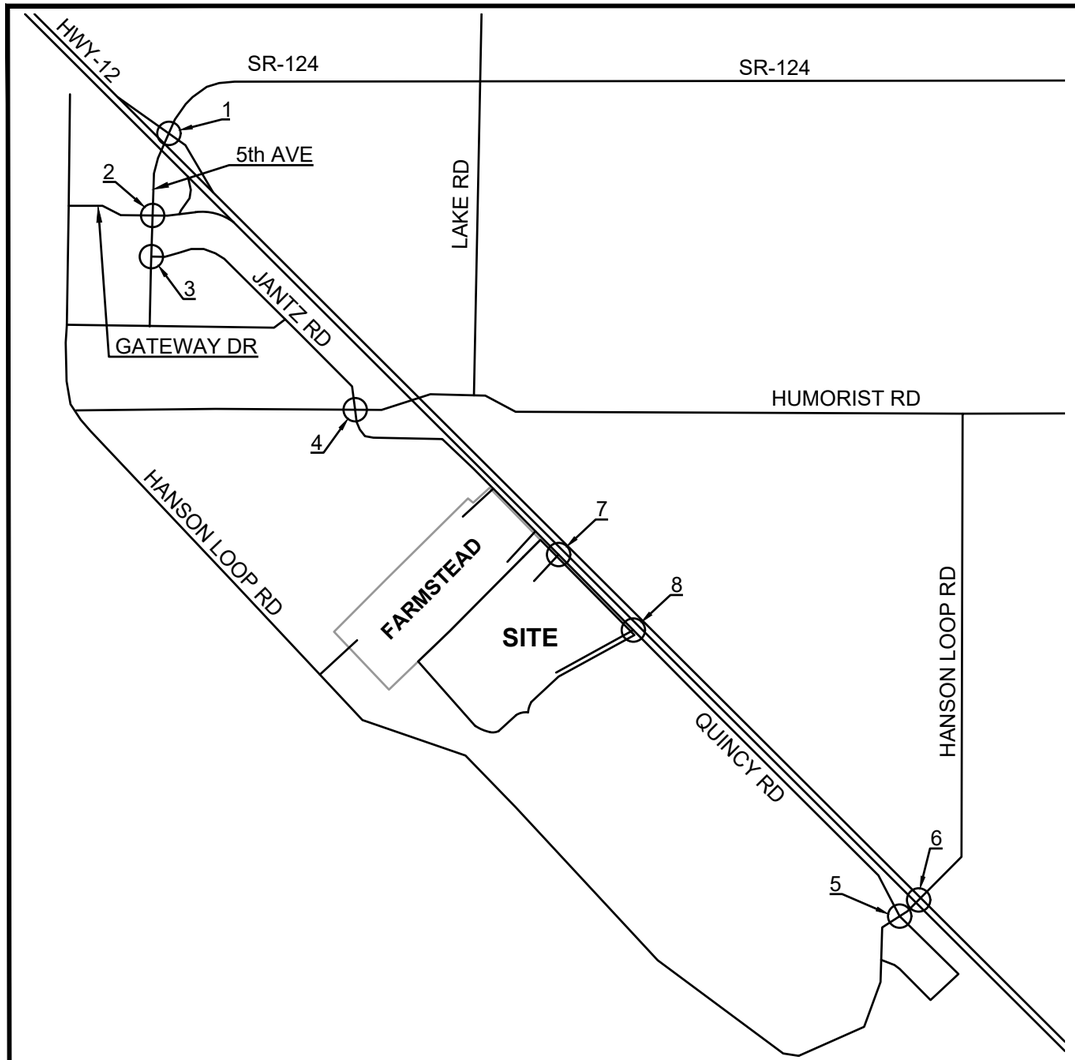

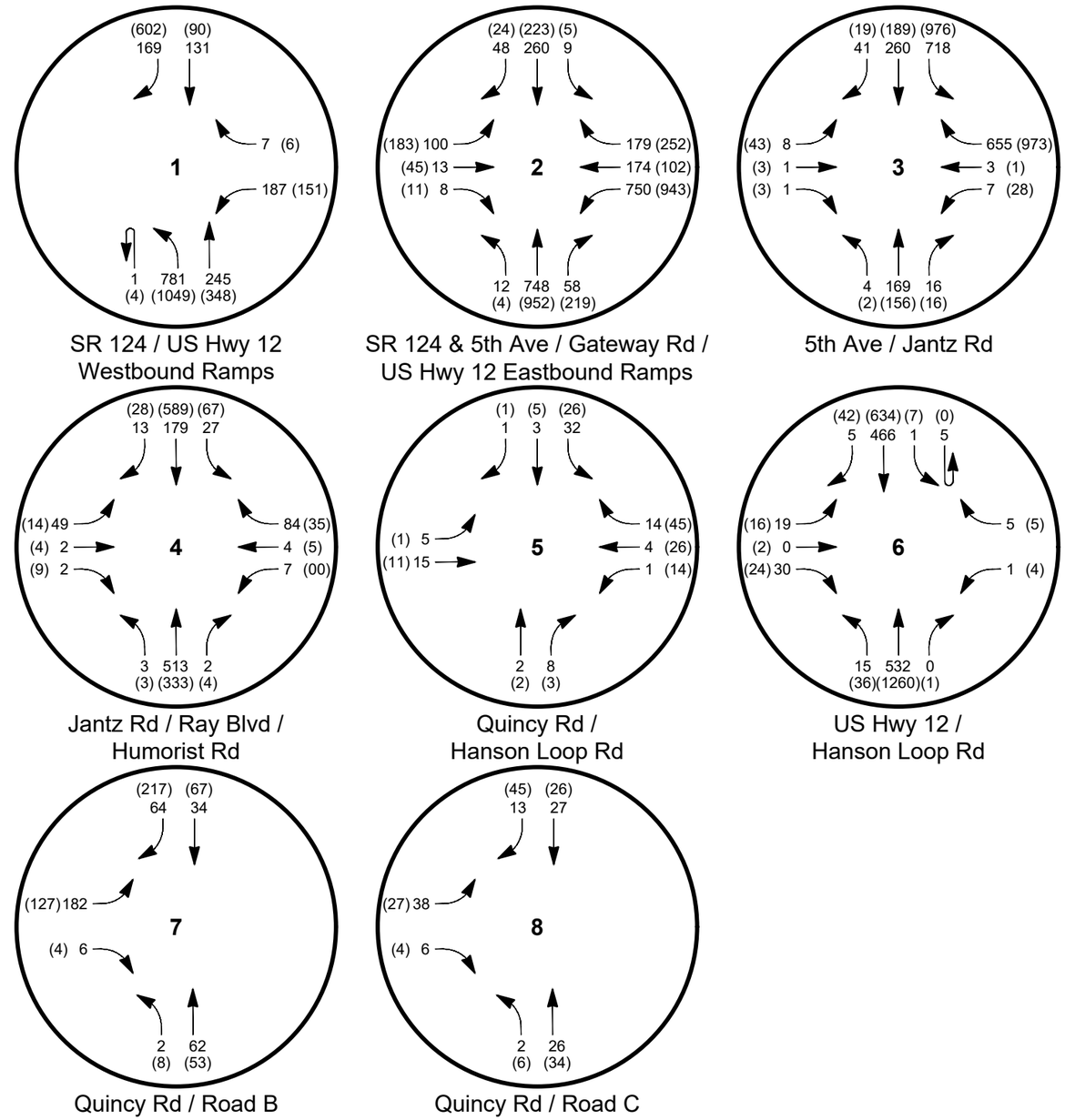

LEGEND

○	INTERSECTION
XXX	AM PEAK HOUR
(XXX)	PM PEAK HOUR

N
NTS

FIGURE 20

2033 With Project Volumes (Phase 1 and 2 of Farmstead and Huntsman's Estates)

Huntsman's Estates

Appendix A
Traffic Counts

ALL TRAFFIC DATA SERVICES
(303) 216-2439
www.alltrafficdata.net

Location: 1 SR-124 & Hwy 12 WB Ramp AM
Date: Thursday, January 20, 2022
Peak Hour: 07:10 AM - 08:10 AM
Peak 15-Minutes: 07:40 AM - 07:55 AM

Peak Hour

Motorized Vehicles

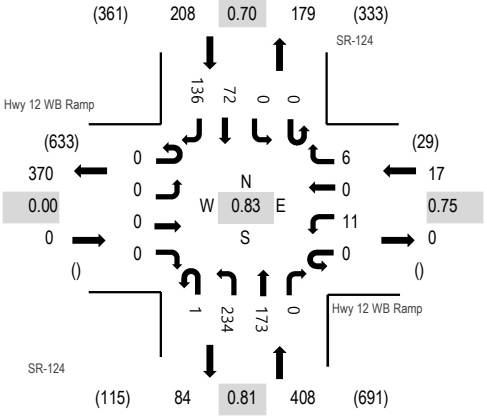

Heavy Vehicles

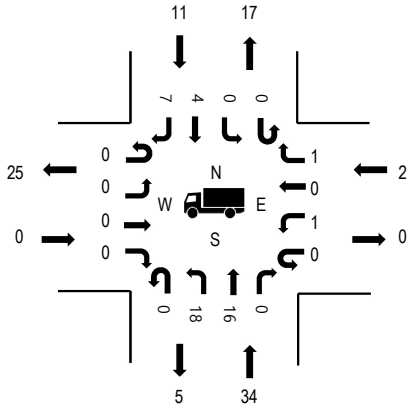

Pedestrians

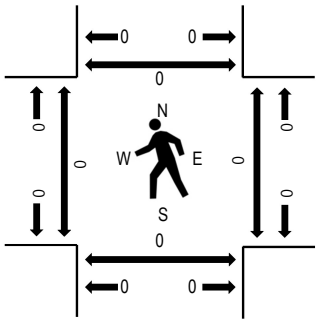

Note: Total study counts contained in parentheses.

	HV%	PHF
EB	0.0%	0.00
WB	11.8%	0.75
NB	8.3%	0.81
SB	5.3%	0.70
All	7.4%	0.83

Traffic Counts - Motorized Vehicles

Interval Start Time	Hwy 12 WB Ramp Eastbound				Hwy 12 WB Ramp Westbound				SR-124 Northbound				SR-124 Southbound					Rolling Hour
	U-Turn	Left	Thru	Right	U-Turn	Left	Thru	Right	U-Turn	Left	Thru	Right	U-Turn	Left	Thru	Right	Total	
7:00 AM	0	0	0	0	0	1	0	0	1	18	12	0	0	0	0	9	41	619
7:05 AM	0	0	0	0	0	1	0	0	0	13	13	0	0	0	2	9	38	630
7:10 AM	0	0	0	0	0	0	0	0	0	18	18	0	0	0	3	17	56	633
7:15 AM	0	0	0	0	0	1	0	2	0	9	18	0	0	0	6	10	46	626
7:20 AM	0	0	0	0	0	1	0	0	0	16	16	0	0	0	6	6	45	614
7:25 AM	0	0	0	0	0	1	0	0	0	16	14	0	0	0	5	8	44	597
7:30 AM	0	0	0	0	0	1	0	0	0	22	7	0	0	0	16	24	70	595
7:35 AM	0	0	0	0	0	2	0	1	1	24	20	0	0	0	3	5	56	577
7:40 AM	0	0	0	0	0	0	0	0	0	18	18	0	0	0	13	14	63	552
7:45 AM	0	0	0	0	0	1	0	0	0	31	13	0	0	0	8	11	64	526
7:50 AM	0	0	0	0	0	1	0	0	0	29	17	0	0	0	6	10	63	496
7:55 AM	0	0	0	0	0	1	0	0	0	13	9	0	0	0	4	6	33	460
8:00 AM	0	0	0	0	0	0	0	3	0	22	10	0	0	0	2	15	52	462
8:05 AM	0	0	0	0	0	2	0	0	0	16	13	0	0	0	0	10	41	
8:10 AM	0	0	0	0	0	0	0	1	0	11	14	0	0	0	2	21	49	
8:15 AM	0	0	0	0	0	1	0	0	0	11	11	0	0	0	1	10	34	
8:20 AM	0	0	0	0	0	2	0	0	0	6	11	0	0	0	1	8	28	
8:25 AM	0	0	0	0	0	1	0	0	0	11	16	0	0	0	5	9	42	
8:30 AM	0	0	0	0	0	1	0	1	0	17	21	0	0	0	1	11	52	
8:35 AM	0	0	0	0	0	1	0	0	0	8	14	0	0	0	0	8	31	
8:40 AM	0	0	0	0	0	1	0	0	0	12	6	0	0	0	2	16	37	
8:45 AM	0	0	0	0	0	1	0	0	1	6	10	0	0	0	2	14	34	
8:50 AM	0	0	0	0	0	0	0	0	0	7	11	0	0	0	3	6	27	
8:55 AM	0	0	0	0	0	0	0	0	0	9	13	0	0	0	0	13	35	
Count Total	0	0	0	0	0	21	0	8	3	363	325	0	0	0	91	270	1,081	
Peak Hour	0	0	0	0	0	11	0	6	1	234	173	0	0	0	72	136	633	

Location: 1 SR-124 & Hwy 12 WB Ramp AM

Traffic Counts - Heavy Vehicles, Bicycles on Road, and Pedestrians/Bicycles on Crosswalk

Interval Start Time	Heavy Vehicles					Interval Start Time	Bicycles on Roadway					Interval Start Time	Pedestrians/Bicycles on Crosswalk				
	EB	NB	WB	SB	Total		EB	NB	WB	SB	Total		EB	NB	WB	SB	Total
7:00 AM	0	1	0	0	1	7:00 AM	0	0	0	0	0	7:00 AM	0	0	0	0	0
7:05 AM	0	1	0	1	2	7:05 AM	0	0	0	0	0	7:05 AM	0	0	0	0	0
7:10 AM	0	6	0	0	6	7:10 AM	0	0	0	0	0	7:10 AM	0	0	0	0	0
7:15 AM	0	2	1	1	4	7:15 AM	0	0	0	0	0	7:15 AM	0	0	0	0	0
7:20 AM	0	3	0	0	3	7:20 AM	0	0	0	0	0	7:20 AM	0	0	0	0	0
7:25 AM	0	2	0	0	2	7:25 AM	0	0	0	0	0	7:25 AM	0	0	0	0	0
7:30 AM	0	2	0	2	4	7:30 AM	0	0	0	2	2	7:30 AM	0	0	0	0	0
7:35 AM	0	3	0	1	4	7:35 AM	0	0	0	0	0	7:35 AM	0	0	0	0	0
7:40 AM	0	3	0	4	7	7:40 AM	0	0	0	0	0	7:40 AM	0	0	0	0	0
7:45 AM	0	4	1	1	6	7:45 AM	0	0	0	0	0	7:45 AM	0	0	0	0	0
7:50 AM	0	3	0	1	4	7:50 AM	0	0	0	0	0	7:50 AM	0	0	0	0	0
7:55 AM	0	2	0	0	2	7:55 AM	0	0	0	0	0	7:55 AM	0	0	0	0	0
8:00 AM	0	1	0	0	1	8:00 AM	0	0	0	0	0	8:00 AM	0	0	0	0	0
8:05 AM	0	3	0	1	4	8:05 AM	0	0	0	0	0	8:05 AM	0	0	0	0	0
8:10 AM	0	3	0	4	7	8:10 AM	0	0	0	0	0	8:10 AM	0	0	0	0	0
8:15 AM	0	3	1	1	5	8:15 AM	0	0	0	0	0	8:15 AM	0	0	0	0	0
8:20 AM	0	0	1	0	1	8:20 AM	0	0	0	0	0	8:20 AM	0	0	0	0	0
8:25 AM	0	4	0	2	6	8:25 AM	0	0	0	0	0	8:25 AM	0	0	0	0	0
8:30 AM	0	9	0	2	11	8:30 AM	0	0	0	0	0	8:30 AM	0	0	0	0	0
8:35 AM	0	5	0	0	5	8:35 AM	0	0	0	0	0	8:35 AM	0	0	0	0	0
8:40 AM	0	4	1	0	5	8:40 AM	0	0	0	0	0	8:40 AM	0	0	0	0	0
8:45 AM	0	2	0	3	5	8:45 AM	0	0	0	0	0	8:45 AM	0	0	0	0	0
8:50 AM	0	2	0	2	4	8:50 AM	0	0	0	0	0	8:50 AM	0	0	0	0	0
8:55 AM	0	3	0	1	4	8:55 AM	0	0	0	0	0	8:55 AM	0	0	0	0	0
Count Total	0	71	5	27	103	Count Total	0	0	0	2	2	Count Total	0	0	0	0	0
Peak Hour	0	34	2	11	47	Peak Hour	0	0	0	2	2	Peak Hour	0	0	0	0	0

Location: 2 SR-124 & Hwy 12 EB Ramp AM

ALL TRAFFIC DATA SERVICES
(303) 216-2439
www.alltrafficdata.net

Location: 2 SR-124 & Hwy 12 EB Ramp AM
Date: Thursday, January 20, 2022
Peak Hour: 07:10 AM - 08:10 AM
Peak 15-Minutes: 07:40 AM - 07:55 AM

Peak Hour

Motorized Vehicles

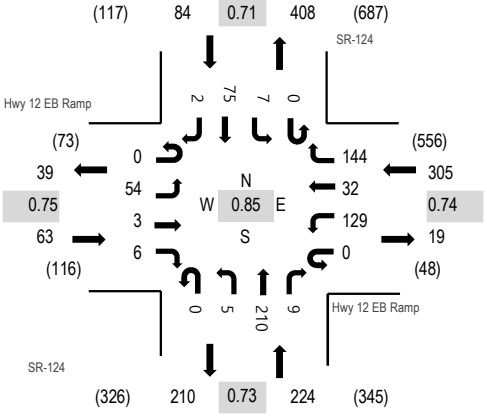

Heavy Vehicles

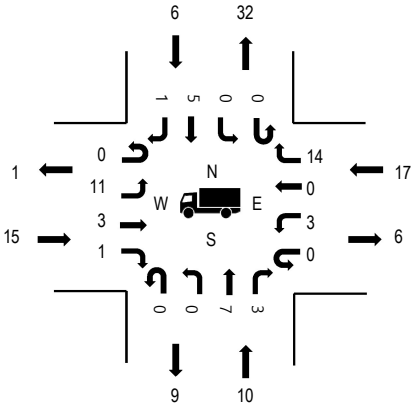

Pedestrians

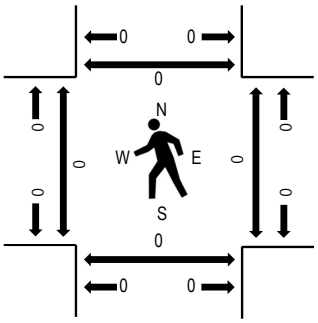

Note: Total study counts contained in parentheses.

	HV%	PHF
EB	23.8%	0.75
WB	5.6%	0.74
NB	4.5%	0.73
SB	7.1%	0.71
All	7.1%	0.85

Traffic Counts - Motorized Vehicles

Interval Start Time	Hwy 12 EB Ramp Eastbound				Hwy 12 EB Ramp Westbound				SR-124 Northbound				SR-124 Southbound				Total	Rolling Hour
	U-Turn	Left	Thru	Right	U-Turn	Left	Thru	Right	U-Turn	Left	Thru	Right	U-Turn	Left	Thru	Right		
7:00 AM	0	7	1	2	0	4	4	15	0	0	9	2	0	0	0	0	44	669
7:05 AM	0	3	1	0	0	10	2	6	0	0	11	2	0	2	2	0	39	675
7:10 AM	0	8	0	0	0	9	5	15	0	0	13	0	0	0	2	0	52	676
7:15 AM	0	4	0	2	0	7	0	17	0	0	8	2	0	1	6	0	47	663
7:20 AM	0	4	0	1	0	18	2	16	0	2	14	1	0	1	6	0	65	646
7:25 AM	0	4	0	0	0	22	6	14	0	1	12	0	0	1	7	0	67	624
7:30 AM	0	3	0	0	0	14	3	8	0	0	19	1	0	3	10	0	61	607
7:35 AM	0	1	1	0	0	9	2	12	0	0	24	0	0	0	9	0	58	596
7:40 AM	0	4	0	1	0	14	1	15	0	1	18	1	0	1	5	0	61	566
7:45 AM	0	7	1	0	0	7	5	11	0	0	28	1	0	0	13	1	74	539
7:50 AM	0	7	0	0	0	10	0	11	0	0	28	0	0	0	7	1	64	496
7:55 AM	0	3	1	0	0	5	1	5	0	1	12	2	0	0	7	0	37	465
8:00 AM	0	3	0	0	0	10	5	9	0	0	23	0	0	0	0	0	50	465
8:05 AM	0	6	0	2	0	4	2	11	0	0	11	1	0	0	3	0	40	
8:10 AM	0	3	0	0	0	11	1	12	0	0	8	1	0	0	3	0	39	
8:15 AM	0	3	0	0	0	7	2	7	0	1	8	0	0	0	0	2	30	
8:20 AM	0	5	0	0	0	11	2	9	0	1	9	3	0	0	2	1	43	
8:25 AM	0	0	0	0	0	12	0	20	0	0	8	2	0	2	5	1	50	
8:30 AM	0	8	1	0	0	4	2	14	0	0	13	6	0	0	2	0	50	
8:35 AM	0	5	0	1	0	3	4	9	0	0	4	1	0	0	0	1	28	
8:40 AM	0	5	0	2	0	9	2	6	0	0	7	0	0	2	0	1	34	
8:45 AM	0	4	0	0	0	6	2	9	0	0	5	1	0	0	4	0	31	
8:50 AM	0	1	1	0	0	8	3	11	0	0	6	0	0	1	2	0	33	
8:55 AM	0	0	0	0	0	6	2	16	0	0	13	0	0	0	0	0	37	
Count Total	0	98	7	11	0	220	58	278	0	7	311	27	0	14	95	8	1,134	
Peak Hour	0	54	3	6	0	129	32	144	0	5	210	9	0	7	75	2	676	

Location: 2 SR-124 & Hwy 12 EB Ramp AM

Traffic Counts - Heavy Vehicles, Bicycles on Road, and Pedestrians/Bicycles on Crosswalk

Interval Start Time	Heavy Vehicles					Interval Start Time	Bicycles on Roadway					Interval Start Time	Pedestrians/Bicycles on Crosswalk				
	EB	NB	WB	SB	Total		EB	NB	WB	SB	Total		EB	NB	WB	SB	Total
7:00 AM	1	0	1	0	2	7:00 AM	0	0	0	0	0	7:00 AM	0	0	0	0	0
7:05 AM	0	1	1	0	2	7:05 AM	0	0	0	0	0	7:05 AM	0	0	0	0	0
7:10 AM	0	2	3	1	6	7:10 AM	0	0	0	0	0	7:10 AM	0	0	0	0	0
7:15 AM	1	0	1	0	2	7:15 AM	0	0	0	0	0	7:15 AM	0	0	0	0	0
7:20 AM	0	2	2	0	4	7:20 AM	0	0	0	0	0	7:20 AM	0	0	0	0	0
7:25 AM	1	0	3	0	4	7:25 AM	0	0	0	0	0	7:25 AM	0	0	0	0	0
7:30 AM	0	0	1	2	3	7:30 AM	0	0	0	0	0	7:30 AM	0	0	0	0	0
7:35 AM	1	1	2	0	4	7:35 AM	0	0	0	0	0	7:35 AM	0	0	0	0	0
7:40 AM	2	0	1	0	3	7:40 AM	0	0	0	0	0	7:40 AM	0	0	0	0	0
7:45 AM	3	0	3	3	9	7:45 AM	0	0	0	0	0	7:45 AM	0	0	0	0	0
7:50 AM	1	1	0	0	2	7:50 AM	0	0	0	0	0	7:50 AM	0	0	0	0	0
7:55 AM	2	2	0	0	4	7:55 AM	0	0	0	0	0	7:55 AM	0	0	0	0	0
8:00 AM	1	1	0	0	2	8:00 AM	0	0	0	0	0	8:00 AM	0	0	0	0	0
8:05 AM	3	1	1	0	5	8:05 AM	0	0	0	0	0	8:05 AM	0	0	0	0	0
8:10 AM	1	1	3	0	5	8:10 AM	0	0	0	0	0	8:10 AM	0	0	0	0	0
8:15 AM	2	0	2	0	4	8:15 AM	0	0	0	0	0	8:15 AM	0	0	0	0	0
8:20 AM	0	1	4	1	6	8:20 AM	0	0	0	0	0	8:20 AM	0	0	0	0	0
8:25 AM	0	2	5	0	7	8:25 AM	0	0	0	0	0	8:25 AM	0	0	0	0	0
8:30 AM	3	0	4	0	7	8:30 AM	0	0	0	0	0	8:30 AM	0	0	0	0	0
8:35 AM	1	1	5	0	7	8:35 AM	0	0	0	0	0	8:35 AM	0	0	0	0	0
8:40 AM	5	0	1	1	7	8:40 AM	0	0	0	0	0	8:40 AM	0	0	0	0	0
8:45 AM	2	1	2	0	5	8:45 AM	0	0	0	0	0	8:45 AM	0	0	0	0	0
8:50 AM	1	0	4	0	5	8:50 AM	0	0	0	0	0	8:50 AM	0	0	0	0	0
8:55 AM	0	2	2	0	4	8:55 AM	0	0	0	0	0	8:55 AM	0	0	0	0	0
Count Total	31	19	51	8	109	Count Total	0	0	0	0	0	Count Total	0	0	0	0	0
Peak Hour	15	10	17	6	48	Peak Hour	0	0	0	0	0	Peak Hour	0	0	0	0	0

Location: 3 5th St & Janz Rd AM

ALL TRAFFIC DATA SERVICES
(303) 216-2439
www.alltrafficdata.net

Location: 3 5th St & Janz Rd AM
Date: Thursday, January 20, 2022
Peak Hour: 07:05 AM - 08:05 AM
Peak 15-Minutes: 07:25 AM - 07:40 AM

Peak Hour

Motorized Vehicles

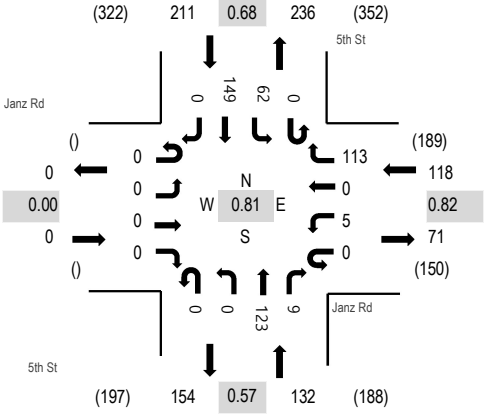

Heavy Vehicles

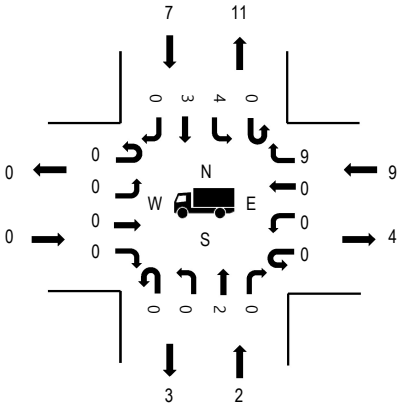

Pedestrians

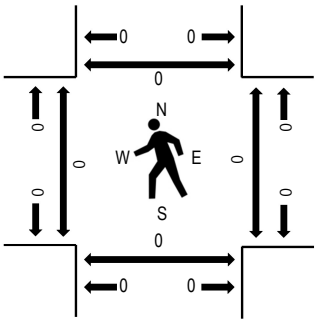

Note: Total study counts contained in parentheses.

	HV%	PHF
EB	0.0%	0.00
WB	7.6%	0.82
NB	1.5%	0.57
SB	3.3%	0.68
All	3.9%	0.81

Traffic Counts - Motorized Vehicles

Interval Start Time	Janz Rd Eastbound				Janz Rd Westbound				5th St Northbound				5th St Southbound				Total	Rolling Hour
	U-Turn	Left	Thru	Right	U-Turn	Left	Thru	Right	U-Turn	Left	Thru	Right	U-Turn	Left	Thru	Right		
7:00 AM	0	0	0	0	0	0	0	6	0	0	4	0	0	5	2	0	17	444
7:05 AM	0	0	0	0	0	1	0	10	0	0	5	0	0	4	8	0	28	461
7:10 AM	0	0	0	0	0	0	0	7	0	0	4	0	0	4	5	0	20	455
7:15 AM	0	0	0	0	0	1	0	4	0	0	6	1	0	3	11	0	26	458
7:20 AM	0	0	0	0	0	0	0	11	0	0	7	0	0	10	11	0	39	451
7:25 AM	0	0	0	0	0	0	0	5	0	0	8	0	0	8	22	0	43	437
7:30 AM	0	0	0	0	0	1	0	9	0	0	13	0	0	7	20	0	50	419
7:35 AM	0	0	0	0	0	0	0	17	0	0	13	1	0	2	17	0	50	394
7:40 AM	0	0	0	0	0	0	0	9	0	0	13	1	0	6	14	0	43	354
7:45 AM	0	0	0	0	0	0	0	10	0	0	18	3	0	5	14	0	50	331
7:50 AM	0	0	0	0	0	0	0	9	0	0	21	2	0	5	13	0	50	298
7:55 AM	0	0	0	0	0	2	0	9	0	0	6	0	0	3	8	0	28	264
8:00 AM	0	0	0	0	0	0	0	13	0	0	9	1	0	5	6	0	34	255
8:05 AM	0	0	0	0	0	0	0	9	0	0	3	1	0	3	6	0	22	
8:10 AM	0	0	0	0	0	1	0	5	0	0	4	0	0	8	5	0	23	
8:15 AM	0	0	0	0	0	0	0	4	0	0	7	0	0	7	1	0	19	
8:20 AM	0	0	0	0	0	1	0	5	0	0	5	1	0	9	4	0	25	
8:25 AM	0	0	0	0	0	0	0	4	0	0	6	1	0	7	7	0	25	
8:30 AM	0	0	0	0	0	0	0	11	0	0	7	1	0	3	3	0	25	
8:35 AM	0	0	0	0	0	0	0	3	0	0	2	1	0	2	2	0	10	
8:40 AM	0	0	0	0	0	0	0	3	0	0	4	1	0	10	2	0	20	
8:45 AM	0	0	0	0	0	1	0	6	0	0	0	0	0	8	2	0	17	
8:50 AM	0	0	0	0	0	1	0	5	0	0	1	0	0	6	3	0	16	
8:55 AM	0	0	0	0	0	0	0	6	0	0	6	1	0	4	2	0	19	
Count Total	0	0	0	0	0	9	0	180	0	0	172	16	0	134	188	0	699	
Peak Hour	0	0	0	0	0	5	0	113	0	0	123	9	0	62	149	0	461	

Location: 3 5th St & Janz Rd AM

Traffic Counts - Heavy Vehicles, Bicycles on Road, and Pedestrians/Bicycles on Crosswalk

Interval Start Time	Heavy Vehicles					Interval Start Time	Bicycles on Roadway					Interval Start Time	Pedestrians/Bicycles on Crosswalk				
	EB	NB	WB	SB	Total		EB	NB	WB	SB	Total		EB	NB	WB	SB	Total
7:00 AM	0	0	0	0	0	7:00 AM	0	0	0	0	0	7:00 AM	0	0	0	0	0
7:05 AM	0	0	1	0	1	7:05 AM	0	0	0	0	0	7:05 AM	0	0	0	0	0
7:10 AM	0	0	2	0	2	7:10 AM	0	0	0	0	0	7:10 AM	0	0	0	0	0
7:15 AM	0	0	0	0	0	7:15 AM	0	0	0	0	0	7:15 AM	0	0	0	0	0
7:20 AM	0	0	2	1	3	7:20 AM	0	0	0	0	0	7:20 AM	0	0	0	0	0
7:25 AM	0	0	0	1	1	7:25 AM	0	0	0	0	0	7:25 AM	0	0	0	0	0
7:30 AM	0	0	0	2	2	7:30 AM	0	0	0	0	0	7:30 AM	0	0	0	0	0
7:35 AM	0	0	2	1	3	7:35 AM	0	0	0	0	0	7:35 AM	0	0	0	0	0
7:40 AM	0	0	0	0	0	7:40 AM	0	0	0	0	0	7:40 AM	0	0	0	0	0
7:45 AM	0	0	0	2	2	7:45 AM	0	0	0	0	0	7:45 AM	0	0	0	0	0
7:50 AM	0	1	0	0	1	7:50 AM	0	0	0	0	0	7:50 AM	0	0	0	0	0
7:55 AM	0	1	1	0	2	7:55 AM	0	0	0	0	0	7:55 AM	0	0	0	0	0
8:00 AM	0	0	1	0	1	8:00 AM	0	0	0	0	0	8:00 AM	0	0	0	0	0
8:05 AM	0	0	1	1	2	8:05 AM	0	0	0	0	0	8:05 AM	0	0	0	0	0
8:10 AM	0	0	1	2	3	8:10 AM	0	0	0	0	0	8:10 AM	0	0	0	0	0
8:15 AM	0	0	0	0	0	8:15 AM	0	0	0	0	0	8:15 AM	0	0	0	0	0
8:20 AM	0	1	0	3	4	8:20 AM	0	0	0	0	0	8:20 AM	0	0	0	0	0
8:25 AM	0	0	2	0	2	8:25 AM	0	0	0	0	0	8:25 AM	0	0	0	0	0
8:30 AM	0	0	0	1	1	8:30 AM	0	0	0	0	0	8:30 AM	0	0	0	0	0
8:35 AM	0	1	0	0	1	8:35 AM	0	0	0	0	0	8:35 AM	0	0	0	0	0
8:40 AM	0	0	0	3	3	8:40 AM	0	0	0	0	0	8:40 AM	0	0	0	0	0
8:45 AM	0	0	1	0	1	8:45 AM	0	0	0	0	0	8:45 AM	0	0	0	0	0
8:50 AM	0	0	1	0	1	8:50 AM	0	0	0	0	0	8:50 AM	0	0	0	0	0
8:55 AM	0	2	0	0	2	8:55 AM	0	0	0	0	0	8:55 AM	0	0	0	0	0
Count Total	0	6	15	17	38	Count Total	0	0	0	0	0	Count Total	0	0	0	0	0
Peak Hour	0	2	9	7	18	Peak Hour	0	0	0	0	0	Peak Hour	0	0	0	0	0

Location: 4 Janz Rd & Humorist Rd AM

ALL TRAFFIC DATA SERVICES
(303) 216-2439
www.alltrafficdata.net

Location: 4 Janz Rd & Humorist Rd AM
Date: Thursday, January 20, 2022
Peak Hour: 07:05 AM - 08:05 AM
Peak 15-Minutes: 07:30 AM - 07:45 AM

Peak Hour

Motorized Vehicles

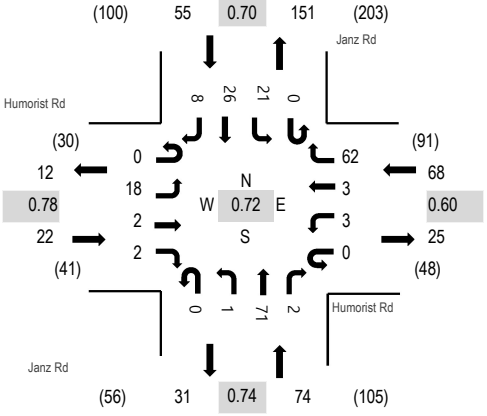

Heavy Vehicles

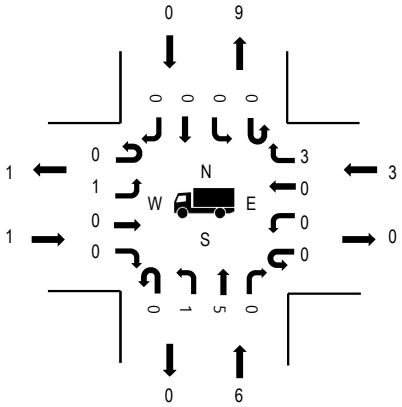

Pedestrians

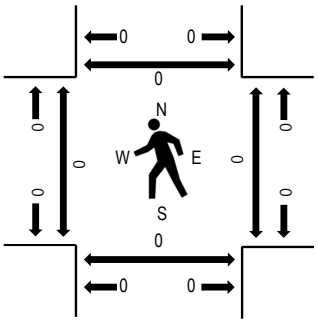

Note: Total study counts contained in parentheses.

	HV%	PHF
EB	4.5%	0.78
WB	4.4%	0.60
NB	8.1%	0.74
SB	0.0%	0.70
All	4.6%	0.72

Traffic Counts - Motorized Vehicles

Interval Start Time	Humorist Rd Eastbound				Humorist Rd Westbound				Janz Rd Northbound				Janz Rd Southbound				Total	Rolling Hour
	U-Turn	Left	Thru	Right	U-Turn	Left	Thru	Right	U-Turn	Left	Thru	Right	U-Turn	Left	Thru	Right		
7:00 AM	0	2	0	1	0	1	0	3	0	1	2	0	0	1	0	0	11	215
7:05 AM	0	1	0	0	0	0	0	5	0	0	6	1	0	1	3	1	18	219
7:10 AM	0	0	0	0	0	0	0	4	0	0	3	0	0	0	1	1	9	212
7:15 AM	0	1	0	0	0	0	0	1	0	0	7	0	0	1	2	0	12	209
7:20 AM	0	1	0	0	0	0	0	6	0	0	3	0	0	1	1	1	13	212
7:25 AM	0	0	1	0	0	0	1	7	0	0	7	0	0	0	2	1	19	211
7:30 AM	0	2	0	1	0	0	0	8	0	1	7	0	0	2	1	0	22	202
7:35 AM	0	3	0	0	0	1	1	10	0	0	8	0	0	3	4	0	30	189
7:40 AM	0	2	1	0	0	1	0	8	0	0	8	1	0	1	1	1	24	161
7:45 AM	0	2	0	0	0	0	0	4	0	0	7	0	0	4	4	1	22	150
7:50 AM	0	2	0	0	0	1	1	3	0	0	4	0	0	2	5	1	19	137
7:55 AM	0	2	0	0	0	0	0	4	0	0	6	0	0	1	2	1	16	127
8:00 AM	0	2	0	1	0	0	0	2	0	0	5	0	0	5	0	0	15	122
8:05 AM	0	2	0	1	0	0	0	3	0	1	1	0	0	1	2	0	11	
8:10 AM	0	1	1	0	0	1	0	1	0	0	1	0	0	0	1	0	6	
8:15 AM	0	0	0	0	0	0	1	1	0	0	5	0	0	3	4	1	15	
8:20 AM	0	0	0	1	0	0	0	2	0	1	3	0	0	3	1	1	12	
8:25 AM	0	3	0	1	1	0	0	0	0	0	2	0	0	3	0	0	10	
8:30 AM	0	0	0	0	0	1	1	1	0	0	3	0	0	1	0	2	9	
8:35 AM	0	0	0	0	0	1	0	0	0	0	0	0	0	0	0	1	2	
8:40 AM	0	1	1	0	0	0	0	1	0	1	2	0	0	2	2	3	13	
8:45 AM	0	1	0	0	0	0	0	0	0	0	1	2	0	1	2	2	9	
8:50 AM	0	2	0	0	0	0	0	1	0	0	2	0	0	0	2	2	9	
8:55 AM	0	0	1	0	0	0	0	3	0	0	2	1	0	1	3	0	11	
Count Total	0	30	5	6	1	7	5	78	0	5	95	5	0	37	43	20	337	
Peak Hour	0	18	2	2	0	3	3	62	0	1	71	2	0	21	26	8	219	

Location: 4 Janz Rd & Humorist Rd AM

Traffic Counts - Heavy Vehicles, Bicycles on Road, and Pedestrians/Bicycles on Crosswalk

Interval Start Time	Heavy Vehicles					Interval Start Time	Bicycles on Roadway					Interval Start Time	Pedestrians/Bicycles on Crosswalk				
	EB	NB	WB	SB	Total		EB	NB	WB	SB	Total		EB	NB	WB	SB	Total
7:00 AM	1	0	0	1	2	7:00 AM	0	0	0	0	0	7:00 AM	0	0	0	0	0
7:05 AM	0	0	0	0	0	7:05 AM	0	0	0	0	0	7:05 AM	0	0	0	0	0
7:10 AM	0	2	0	0	2	7:10 AM	0	0	0	0	0	7:10 AM	0	0	0	0	0
7:15 AM	0	0	0	0	0	7:15 AM	0	0	0	0	0	7:15 AM	0	0	0	0	0
7:20 AM	0	0	1	0	1	7:20 AM	0	0	0	0	0	7:20 AM	0	0	0	0	0
7:25 AM	0	0	0	0	0	7:25 AM	0	0	0	0	0	7:25 AM	0	0	0	0	0
7:30 AM	0	2	0	0	2	7:30 AM	0	0	0	0	0	7:30 AM	0	0	0	0	0
7:35 AM	0	0	0	0	0	7:35 AM	0	0	0	0	0	7:35 AM	0	0	0	0	0
7:40 AM	0	0	1	0	1	7:40 AM	0	0	0	0	0	7:40 AM	0	0	0	0	0
7:45 AM	0	0	0	0	0	7:45 AM	0	0	0	0	0	7:45 AM	0	0	0	0	0
7:50 AM	0	0	0	0	0	7:50 AM	0	0	0	0	0	7:50 AM	0	0	0	0	0
7:55 AM	0	1	1	0	2	7:55 AM	0	0	0	0	0	7:55 AM	0	0	0	0	0
8:00 AM	1	1	0	0	2	8:00 AM	0	0	0	0	0	8:00 AM	0	0	0	0	0
8:05 AM	0	0	0	0	0	8:05 AM	0	0	0	0	0	8:05 AM	0	0	0	0	0
8:10 AM	1	0	0	0	1	8:10 AM	0	0	0	0	0	8:10 AM	0	0	0	0	0
8:15 AM	0	0	0	0	0	8:15 AM	0	0	0	0	0	8:15 AM	0	0	0	0	0
8:20 AM	0	0	0	0	0	8:20 AM	0	0	0	0	0	8:20 AM	0	0	0	0	0
8:25 AM	1	0	1	0	2	8:25 AM	0	0	0	0	0	8:25 AM	0	0	0	0	0
8:30 AM	0	0	0	0	0	8:30 AM	0	0	0	0	0	8:30 AM	0	0	0	0	0
8:35 AM	0	0	0	0	0	8:35 AM	0	0	0	0	0	8:35 AM	0	0	0	0	0
8:40 AM	0	0	0	0	0	8:40 AM	0	0	0	0	0	8:40 AM	0	0	0	0	0
8:45 AM	1	0	0	0	1	8:45 AM	0	0	0	0	0	8:45 AM	0	0	0	0	0
8:50 AM	0	0	0	0	0	8:50 AM	0	0	0	0	0	8:50 AM	0	0	0	0	0
8:55 AM	0	0	0	0	0	8:55 AM	0	0	0	0	0	8:55 AM	0	0	0	0	0
Count Total	5	6	4	1	16	Count Total	0	0	0	0	0	Count Total	0	0	0	0	0
Peak Hour	1	6	3	0	10	Peak Hour	0	0	0	0	0	Peak Hour	0	0	0	0	0

ALL TRAFFIC DATA SERVICES
(303) 216-2439
www.alltrafficdata.net

Location: 1 SR-124 & Hwy 12 WB Ramp PM
Date: Thursday, January 20, 2022
Peak Hour: 04:00 PM - 05:00 PM
Peak 15-Minutes: 04:10 PM - 04:25 PM

Peak Hour

Motorized Vehicles

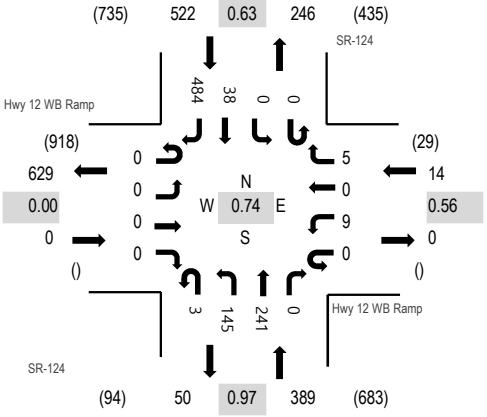

Heavy Vehicles

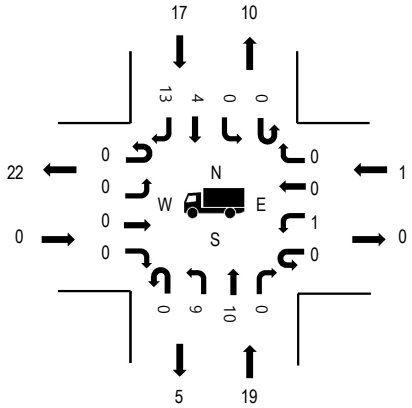

Pedestrians

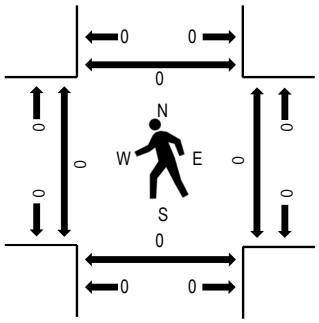

Note: Total study counts contained in parentheses.

	HV%	PHF
EB	0.0%	0.00
WB	7.1%	0.56
NB	4.9%	0.97
SB	3.3%	0.63
All	4.0%	0.74

Traffic Counts - Motorized Vehicles

Interval Start Time	Hwy 12 WB Ramp Eastbound				Hwy 12 WB Ramp Westbound				SR-124 Northbound				SR-124 Southbound				Total	Rolling Hour
	U-Turn	Left	Thru	Right	U-Turn	Left	Thru	Right	U-Turn	Left	Thru	Right	U-Turn	Left	Thru	Right		
4:00 PM	0	0	0	0	0	1	0	0	0	10	27	0	0	0	4	29	71	925
4:05 PM	0	0	0	0	0	1	0	0	0	11	19	0	0	0	5	29	65	905
4:10 PM	0	0	0	0	0	1	0	0	0	13	17	0	0	0	2	77	110	899
4:15 PM	0	0	0	0	0	0	0	2	0	9	21	0	0	0	4	60	96	839
4:20 PM	0	0	0	0	0	1	0	3	0	20	20	0	0	0	2	61	107	799
4:25 PM	0	0	0	0	0	1	0	0	0	10	18	0	0	0	1	42	72	726
4:30 PM	0	0	0	0	0	2	0	0	0	13	19	0	0	0	3	53	90	703
4:35 PM	0	0	0	0	0	1	0	0	0	13	21	0	0	0	2	46	83	650
4:40 PM	0	0	0	0	0	1	0	0	0	11	21	0	0	0	8	38	79	606
4:45 PM	0	0	0	0	0	0	0	0	0	12	22	0	0	0	1	21	56	562
4:50 PM	0	0	0	0	0	0	0	0	2	14	16	0	0	0	4	13	49	538
4:55 PM	0	0	0	0	0	0	0	0	1	9	20	0	0	0	2	15	47	530
5:00 PM	0	0	0	0	0	2	0	2	1	13	13	0	0	0	3	17	51	522
5:05 PM	0	0	0	0	0	0	0	3	0	7	18	0	0	0	4	27	59	
5:10 PM	0	0	0	0	0	1	0	1	0	8	20	0	0	0	5	15	50	
5:15 PM	0	0	0	0	0	1	0	0	0	12	19	0	0	0	7	17	56	
5:20 PM	0	0	0	0	0	0	0	0	0	6	14	0	0	0	2	12	34	
5:25 PM	0	0	0	0	0	1	0	1	0	11	21	0	0	0	4	11	49	
5:30 PM	0	0	0	0	0	0	0	0	0	10	18	0	0	0	2	7	37	
5:35 PM	0	0	0	0	0	0	0	0	0	7	17	0	0	0	0	15	39	
5:40 PM	0	0	0	0	0	2	0	0	0	13	11	0	0	0	1	8	35	
5:45 PM	0	0	0	0	0	1	0	0	0	5	7	0	0	0	3	16	32	
5:50 PM	0	0	0	0	0	0	0	0	0	11	13	0	0	0	4	13	41	
5:55 PM	0	0	0	0	0	0	0	0	0	8	11	0	0	0	0	20	39	
Count Total	0	0	0	0	0	17	0	12	4	256	423	0	0	0	73	662	1,447	
Peak Hour	0	0	0	0	0	9	0	5	3	145	241	0	0	0	38	484	925	

Location: 1 SR-124 & Hwy 12 WB Ramp PM

Traffic Counts - Heavy Vehicles, Bicycles on Road, and Pedestrians/Bicycles on Crosswalk

Interval Start Time	Heavy Vehicles					Interval Start Time	Bicycles on Roadway					Interval Start Time	Pedestrians/Bicycles on Crosswalk				
	EB	NB	WB	SB	Total		EB	NB	WB	SB	Total		EB	NB	WB	SB	Total
4:00 PM	0	1	0	3	4	4:00 PM	0	0	0	0	0	4:00 PM	0	0	0	0	0
4:05 PM	0	1	0	3	4	4:05 PM	0	0	0	0	0	4:05 PM	0	0	0	0	0
4:10 PM	0	0	0	2	2	4:10 PM	0	0	0	0	0	4:10 PM	0	0	0	0	0
4:15 PM	0	1	0	1	2	4:15 PM	0	0	0	0	0	4:15 PM	0	0	0	0	0
4:20 PM	0	2	0	0	2	4:20 PM	0	0	0	0	0	4:20 PM	0	0	0	0	0
4:25 PM	0	4	0	3	7	4:25 PM	0	0	0	0	0	4:25 PM	0	0	0	0	0
4:30 PM	0	2	1	0	3	4:30 PM	0	0	0	0	0	4:30 PM	0	0	0	0	0
4:35 PM	0	3	0	1	4	4:35 PM	0	0	0	0	0	4:35 PM	0	0	0	0	0
4:40 PM	0	1	0	3	4	4:40 PM	0	0	0	0	0	4:40 PM	0	0	0	0	0
4:45 PM	0	0	0	0	0	4:45 PM	0	0	0	0	0	4:45 PM	0	0	0	0	0
4:50 PM	0	2	0	1	3	4:50 PM	0	0	0	0	0	4:50 PM	0	0	0	0	0
4:55 PM	0	2	0	0	2	4:55 PM	0	0	0	0	0	4:55 PM	0	0	0	0	0
5:00 PM	0	1	0	1	2	5:00 PM	0	0	0	0	0	5:00 PM	0	0	0	0	0
5:05 PM	0	0	1	1	2	5:05 PM	0	0	0	0	0	5:05 PM	0	0	0	0	0
5:10 PM	0	1	0	1	2	5:10 PM	0	0	0	0	0	5:10 PM	0	0	0	0	0
5:15 PM	0	0	0	2	2	5:15 PM	0	0	0	0	0	5:15 PM	0	0	0	0	0
5:20 PM	0	3	0	0	3	5:20 PM	0	0	0	0	0	5:20 PM	0	0	0	0	0
5:25 PM	0	2	0	0	2	5:25 PM	0	0	0	0	0	5:25 PM	0	0	0	0	0
5:30 PM	0	0	0	0	0	5:30 PM	0	0	0	0	0	5:30 PM	0	0	0	0	0
5:35 PM	0	1	0	0	1	5:35 PM	0	0	0	0	0	5:35 PM	0	0	0	0	0
5:40 PM	0	2	0	0	2	5:40 PM	0	0	0	0	0	5:40 PM	0	0	0	0	0
5:45 PM	0	0	0	0	0	5:45 PM	0	0	0	0	0	5:45 PM	0	0	0	0	0
5:50 PM	0	0	0	0	0	5:50 PM	0	0	0	0	0	5:50 PM	0	0	0	0	0
5:55 PM	0	1	0	2	3	5:55 PM	0	0	0	0	0	5:55 PM	0	0	0	0	0
Count Total	0	30	2	24	56	Count Total	0	0	0	0	0	Count Total	0	0	0	0	0
Peak Hour	0	19	1	17	37	Peak Hour	0	0	0	0	0	Peak Hour	0	0	0	0	0

Location: 2 SR-124 & Hwy 12 EB Ramp PM

ALL TRAFFIC DATA SERVICES
(303) 216-2439
www.alltrafficdata.net

Location: 2 SR-124 & Hwy 12 EB Ramp PM
Date: Thursday, January 20, 2022
Peak Hour: 04:20 PM - 05:20 PM
Peak 15-Minutes: 04:40 PM - 04:55 PM

Peak Hour

Motorized Vehicles

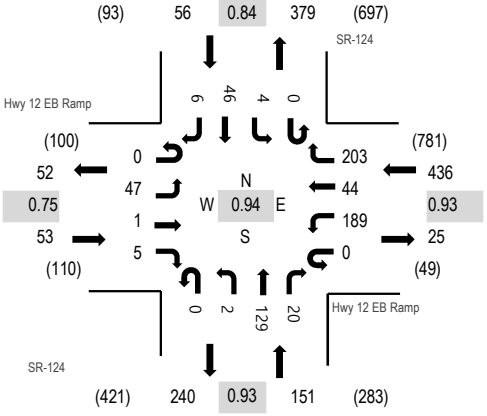

Heavy Vehicles

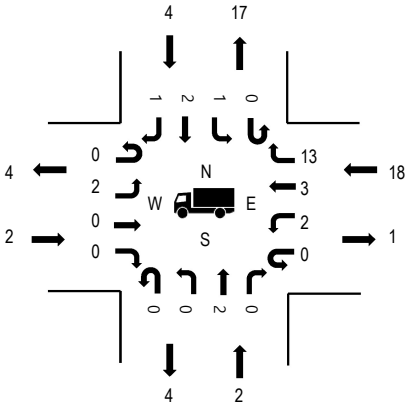

Pedestrians

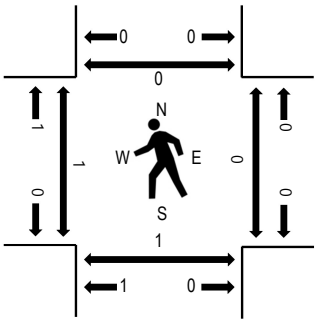

Note: Total study counts contained in parentheses.

	HV%	PHF
EB	3.8%	0.75
WB	4.1%	0.93
NB	1.3%	0.93
SB	7.1%	0.84
All	3.7%	0.94

Traffic Counts - Motorized Vehicles

Interval Start Time	Hwy 12 EB Ramp Eastbound				Hwy 12 EB Ramp Westbound				SR-124 Northbound				SR-124 Southbound				Total	Rolling Hour
	U-Turn	Left	Thru	Right	U-Turn	Left	Thru	Right	U-Turn	Left	Thru	Right	U-Turn	Left	Thru	Right		
4:00 PM	0	4	0	0	0	11	1	18	0	0	11	0	0	0	3	0	48	677
4:05 PM	0	4	2	0	0	10	1	18	0	0	9	0	0	1	4	1	50	686
4:10 PM	0	4	1	1	0	14	5	17	0	0	17	0	0	3	2	0	64	692
4:15 PM	0	5	1	1	0	10	4	14	0	1	10	0	0	0	3	0	49	688
4:20 PM	0	6	0	2	0	20	5	18	0	1	13	2	0	1	2	0	70	696
4:25 PM	0	2	0	1	0	9	4	18	0	0	10	4	0	0	2	1	51	676
4:30 PM	0	5	1	0	0	11	3	15	0	0	12	0	0	0	2	0	49	686
4:35 PM	0	6	0	0	0	16	1	19	0	0	8	1	0	1	4	1	57	687
4:40 PM	0	4	0	0	0	18	1	21	0	0	8	0	0	0	7	2	61	672
4:45 PM	0	4	0	2	0	13	7	15	0	0	15	1	0	0	1	0	58	657
4:50 PM	0	3	0	0	0	18	4	20	0	1	13	1	0	0	6	0	66	629
4:55 PM	0	4	0	0	0	16	6	16	0	0	9	1	0	0	2	0	54	605
5:00 PM	0	4	0	0	0	20	3	8	0	0	14	1	0	0	7	0	57	590
5:05 PM	0	2	0	0	0	20	4	19	0	0	5	3	0	0	3	0	56	
5:10 PM	0	3	0	0	0	14	3	17	0	0	12	4	0	0	7	0	60	
5:15 PM	0	4	0	0	0	14	3	17	0	0	10	2	0	2	3	2	57	
5:20 PM	0	4	0	0	0	22	4	12	0	0	5	1	0	0	2	0	50	
5:25 PM	0	4	0	0	0	10	4	16	0	1	14	7	0	0	5	0	61	
5:30 PM	0	6	0	2	0	11	4	18	0	0	6	1	0	0	2	0	50	
5:35 PM	0	4	0	0	0	13	2	12	0	1	8	2	0	0	0	0	42	
5:40 PM	0	4	0	0	0	15	2	7	0	1	13	1	0	0	3	0	46	
5:45 PM	0	1	0	1	0	13	4	5	0	0	3	0	0	1	2	0	30	
5:50 PM	0	4	0	0	0	6	7	11	0	0	11	0	0	0	3	0	42	
5:55 PM	0	4	0	0	0	10	5	9	0	0	6	3	0	0	2	0	39	
Count Total	0	95	5	10	0	334	87	360	0	6	242	35	0	9	77	7	1,267	
Peak Hour	0	47	1	5	0	189	44	203	0	2	129	20	0	4	46	6	696	

Location: 2 SR-124 & Hwy 12 EB Ramp PM

Traffic Counts - Heavy Vehicles, Bicycles on Road, and Pedestrians/Bicycles on Crosswalk

Interval Start Time	Heavy Vehicles					Interval Start Time	Bicycles on Roadway					Interval Start Time	Pedestrians/Bicycles on Crosswalk				
	EB	NB	WB	SB	Total		EB	NB	WB	SB	Total		EB	NB	WB	SB	Total
4:00 PM	1	0	2	0	3	4:00 PM	0	0	0	0	0	4:00 PM	0	0	0	0	0
4:05 PM	1	0	0	1	2	4:05 PM	0	0	0	0	0	4:05 PM	0	0	0	0	0
4:10 PM	1	0	0	2	3	4:10 PM	0	0	0	0	0	4:10 PM	0	0	0	0	0
4:15 PM	0	1	0	1	2	4:15 PM	0	0	0	0	0	4:15 PM	0	0	0	0	0
4:20 PM	0	1	2	0	3	4:20 PM	0	0	0	0	0	4:20 PM	0	0	0	0	0
4:25 PM	0	1	3	0	4	4:25 PM	0	0	0	0	0	4:25 PM	0	0	0	0	0
4:30 PM	0	0	2	0	2	4:30 PM	0	0	0	0	0	4:30 PM	0	0	0	0	0
4:35 PM	1	0	3	1	5	4:35 PM	0	0	0	0	0	4:35 PM	0	0	0	0	0
4:40 PM	0	0	1	0	1	4:40 PM	0	0	0	0	0	4:40 PM	0	0	0	0	0
4:45 PM	0	0	0	0	0	4:45 PM	0	0	0	0	0	4:45 PM	1	0	0	0	1
4:50 PM	0	0	3	0	3	4:50 PM	0	0	0	0	0	4:50 PM	0	1	0	0	1
4:55 PM	1	0	1	0	2	4:55 PM	0	0	0	0	0	4:55 PM	0	0	0	0	0
5:00 PM	0	0	1	0	1	5:00 PM	0	0	0	0	0	5:00 PM	0	0	0	0	0
5:05 PM	0	0	2	0	2	5:05 PM	0	0	0	0	0	5:05 PM	0	0	0	0	0
5:10 PM	0	0	0	1	1	5:10 PM	0	0	0	0	0	5:10 PM	0	0	0	0	0
5:15 PM	0	0	0	2	2	5:15 PM	0	0	0	0	0	5:15 PM	0	0	0	0	0
5:20 PM	0	0	2	0	2	5:20 PM	0	0	0	0	0	5:20 PM	0	0	0	0	0
5:25 PM	0	2	1	0	3	5:25 PM	0	0	0	0	0	5:25 PM	0	0	0	0	0
5:30 PM	0	1	2	0	3	5:30 PM	0	0	0	0	0	5:30 PM	0	0	0	0	0
5:35 PM	0	0	2	0	2	5:35 PM	0	0	0	0	0	5:35 PM	0	0	0	0	0
5:40 PM	0	0	0	0	0	5:40 PM	0	0	0	0	0	5:40 PM	0	0	0	0	0
5:45 PM	1	0	0	0	1	5:45 PM	0	0	0	0	0	5:45 PM	0	0	0	0	0
5:50 PM	0	0	1	0	1	5:50 PM	0	0	0	0	0	5:50 PM	0	0	0	0	0
5:55 PM	0	0	1	0	1	5:55 PM	0	0	0	0	0	5:55 PM	0	0	0	0	0
Count Total	6	6	29	8	49	Count Total	0	0	0	0	0	Count Total	1	1	0	0	2
Peak Hour	2	2	18	4	26	Peak Hour	0	0	0	0	0	Peak Hour	1	1	0	0	2

Location: 3 5th St & Janz Rd PM

ALL TRAFFIC DATA SERVICES
(303) 216-2439
www.alltrafficdata.net

Location: 3 5th St & Janz Rd PM
Date: Thursday, January 20, 2022
Peak Hour: 04:30 PM - 05:30 PM
Peak 15-Minutes: 05:00 PM - 05:15 PM

Peak Hour

Motorized Vehicles

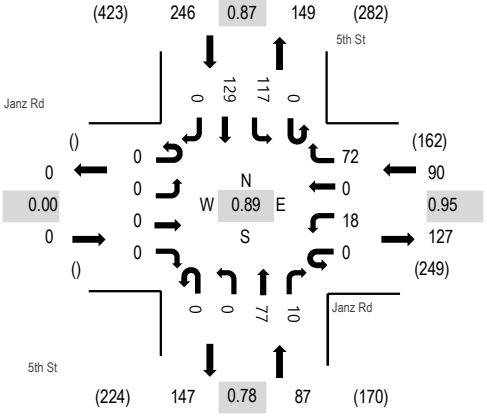

Heavy Vehicles

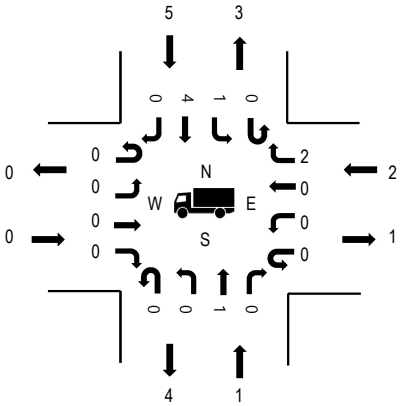

Pedestrians

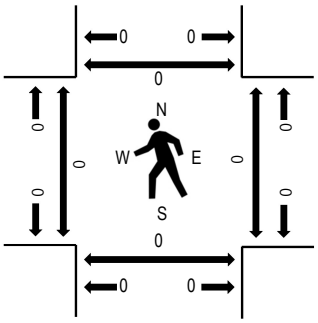

Note: Total study counts contained in parentheses.

	HV%	PHF
EB	0.0%	0.00
WB	2.2%	0.95
NB	1.1%	0.78
SB	2.0%	0.87
All	1.9%	0.89

Traffic Counts - Motorized Vehicles

Interval Start Time	Janz Rd Eastbound				Janz Rd Westbound				5th St Northbound				5th St Southbound				Total	Rolling Hour
	U-Turn	Left	Thru	Right	U-Turn	Left	Thru	Right	U-Turn	Left	Thru	Right	U-Turn	Left	Thru	Right		
4:00 PM	0	0	0	0	0	1	0	6	0	0	5	1	0	5	8	0	26	382
4:05 PM	0	0	0	0	0	0	0	4	0	0	5	1	0	10	5	0	25	398
4:10 PM	0	0	0	0	0	0	0	8	0	0	8	3	0	9	7	0	35	408
4:15 PM	0	0	0	0	0	0	0	8	0	0	6	0	0	8	7	0	29	415
4:20 PM	0	0	0	0	0	1	0	7	0	0	10	1	0	13	7	0	39	419
4:25 PM	0	0	0	0	0	1	0	3	0	0	8	2	0	6	8	0	28	413
4:30 PM	0	0	0	0	0	2	0	4	0	0	7	2	0	7	8	0	30	423
4:35 PM	0	0	0	0	0	0	0	6	0	0	6	1	0	9	11	0	33	420
4:40 PM	0	0	0	0	0	3	0	4	0	0	1	1	0	11	14	0	34	414
4:45 PM	0	0	0	0	0	1	0	10	0	0	8	0	0	9	7	0	35	414
4:50 PM	0	0	0	0	0	0	0	5	0	0	8	0	0	9	12	0	34	397
4:55 PM	0	0	0	0	0	3	0	5	0	0	6	0	0	9	11	0	34	386
5:00 PM	0	0	0	0	0	1	0	7	0	0	7	2	0	12	13	0	42	373
5:05 PM	0	0	0	0	0	2	0	4	0	0	4	1	0	12	12	0	35	
5:10 PM	0	0	0	0	0	1	0	8	0	0	10	1	0	12	10	0	42	
5:15 PM	0	0	0	0	0	1	0	6	0	0	6	0	0	7	13	0	33	
5:20 PM	0	0	0	0	0	2	0	4	0	0	5	0	0	12	10	0	33	
5:25 PM	0	0	0	0	0	2	0	9	0	0	9	2	0	8	8	0	38	
5:30 PM	0	0	0	0	0	2	0	3	0	0	5	2	0	7	8	0	27	
5:35 PM	0	0	0	0	0	0	0	7	0	0	6	2	0	6	6	0	27	
5:40 PM	0	0	0	0	0	2	0	6	0	0	6	0	0	14	6	0	34	
5:45 PM	0	0	0	0	0	0	0	2	0	0	0	1	0	12	3	0	18	
5:50 PM	0	0	0	0	0	0	0	6	0	0	7	0	0	8	2	0	23	
5:55 PM	0	0	0	0	0	0	0	5	0	0	2	2	0	9	3	0	21	
Count Total	0	0	0	0	0	25	0	137	0	0	145	25	0	224	199	0	755	
Peak Hour	0	0	0	0	0	18	0	72	0	0	77	10	0	117	129	0	423	

Location: 3 5th St & Janz Rd PM

Traffic Counts - Heavy Vehicles, Bicycles on Road, and Pedestrians/Bicycles on Crosswalk

Interval Start Time	Heavy Vehicles					Interval Start Time	Bicycles on Roadway					Interval Start Time	Pedestrians/Bicycles on Crosswalk				
	EB	NB	WB	SB	Total		EB	NB	WB	SB	Total		EB	NB	WB	SB	Total
4:00 PM	0	0	0	1	1	4:00 PM	0	0	0	0	0	4:00 PM	0	0	0	0	0
4:05 PM	0	0	0	0	0	4:05 PM	0	0	0	0	0	4:05 PM	0	0	0	0	0
4:10 PM	0	1	0	0	1	4:10 PM	0	0	0	0	0	4:10 PM	0	0	0	0	0
4:15 PM	0	0	1	1	2	4:15 PM	0	0	0	0	0	4:15 PM	0	0	0	0	0
4:20 PM	0	0	2	0	2	4:20 PM	0	0	0	0	0	4:20 PM	0	0	0	0	0
4:25 PM	0	0	1	0	1	4:25 PM	0	0	0	0	0	4:25 PM	0	0	0	0	0
4:30 PM	0	0	0	0	0	4:30 PM	0	0	0	0	0	4:30 PM	0	0	0	0	0
4:35 PM	0	0	0	0	0	4:35 PM	0	0	0	0	0	4:35 PM	0	0	0	0	0
4:40 PM	0	0	0	0	0	4:40 PM	0	0	0	0	0	4:40 PM	0	0	0	0	0
4:45 PM	0	0	0	0	0	4:45 PM	0	0	0	0	0	4:45 PM	0	0	0	0	0
4:50 PM	0	0	0	1	1	4:50 PM	0	0	0	0	0	4:50 PM	0	0	0	0	0
4:55 PM	0	0	0	0	0	4:55 PM	0	0	0	0	0	4:55 PM	0	0	0	0	0
5:00 PM	0	0	0	0	0	5:00 PM	0	0	0	0	0	5:00 PM	0	0	0	0	0
5:05 PM	0	0	0	1	1	5:05 PM	0	0	0	0	0	5:05 PM	0	0	0	0	0
5:10 PM	0	1	0	1	2	5:10 PM	0	0	0	0	0	5:10 PM	0	0	0	0	0
5:15 PM	0	0	0	2	2	5:15 PM	0	0	0	0	0	5:15 PM	0	0	0	0	0
5:20 PM	0	0	0	0	0	5:20 PM	0	0	0	0	0	5:20 PM	0	0	0	0	0
5:25 PM	0	0	2	0	2	5:25 PM	0	0	0	0	0	5:25 PM	0	0	0	0	0
5:30 PM	0	1	0	0	1	5:30 PM	0	0	0	0	0	5:30 PM	0	0	0	0	0
5:35 PM	0	0	0	0	0	5:35 PM	0	0	0	0	0	5:35 PM	0	0	0	0	0
5:40 PM	0	0	0	0	0	5:40 PM	0	0	0	0	0	5:40 PM	0	0	0	0	0
5:45 PM	0	0	0	0	0	5:45 PM	0	0	0	0	0	5:45 PM	0	0	0	0	0
5:50 PM	0	0	0	0	0	5:50 PM	0	0	0	0	0	5:50 PM	0	0	0	0	0
5:55 PM	0	0	0	0	0	5:55 PM	0	0	0	0	0	5:55 PM	0	0	0	0	0
Count Total	0	3	6	7	16	Count Total	0	0	0	0	0	Count Total	0	0	0	0	0
Peak Hour	0	1	2	5	8	Peak Hour	0	0	0	0	0	Peak Hour	0	0	0	0	0

Location: 4 Janz Rd & Humorist Rd PM

ALL TRAFFIC DATA SERVICES
(303) 216-2439
www.alltrafficdata.net

Location: 4 Janz Rd & Humorist Rd PM
Date: Thursday, January 20, 2022
Peak Hour: 04:25 PM - 05:25 PM
Peak 15-Minutes: 04:55 PM - 05:10 PM

Peak Hour

Motorized Vehicles

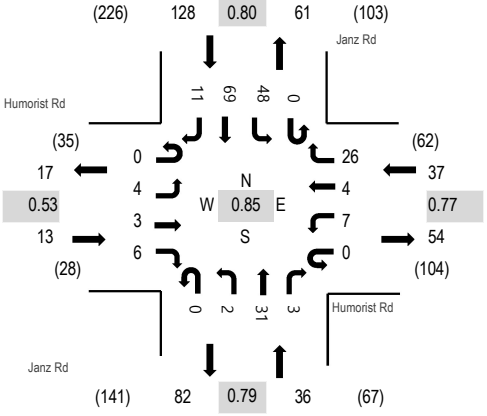

Heavy Vehicles

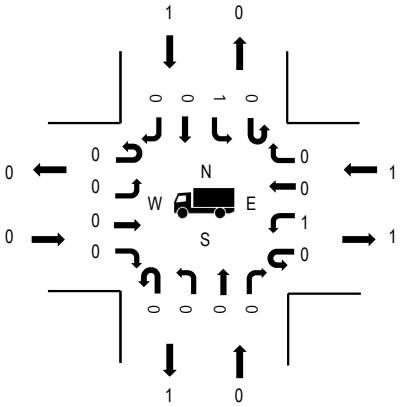

Pedestrians

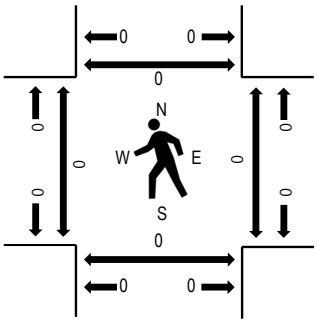

Note: Total study counts contained in parentheses.

	HV%	PHF
EB	0.0%	0.53
WB	2.7%	0.77
NB	0.0%	0.79
SB	0.8%	0.80
All	0.9%	0.85

Traffic Counts - Motorized Vehicles

Interval Start Time	Humorist Rd Eastbound				Humorist Rd Westbound				Janz Rd Northbound				Janz Rd Southbound				Total	Rolling Hour
	U-Turn	Left	Thru	Right	U-Turn	Left	Thru	Right	U-Turn	Left	Thru	Right	U-Turn	Left	Thru	Right		
4:00 PM	0	2	0	1	0	1	0	1	0	0	1	0	0	1	5	0	12	194
4:05 PM	0	2	0	1	0	1	0	1	0	0	1	0	0	3	5	0	14	200
4:10 PM	0	0	2	0	0	0	2	2	0	2	5	0	0	5	1	1	20	207
4:15 PM	0	1	0	0	0	1	1	1	0	0	4	0	0	2	7	0	17	208
4:20 PM	0	1	0	0	0	0	0	1	0	0	0	0	0	5	3	2	12	212
4:25 PM	0	0	1	1	0	1	0	1	0	1	1	0	0	3	3	1	13	214
4:30 PM	0	1	0	1	0	0	0	2	0	1	1	1	0	2	3	1	13	213
4:35 PM	0	0	0	0	0	0	0	4	0	0	3	0	0	1	6	3	17	213
4:40 PM	0	1	0	0	0	2	0	3	0	0	2	1	0	4	7	0	20	209
4:45 PM	0	0	0	0	0	1	1	1	0	0	3	0	0	4	2	2	14	205
4:50 PM	0	0	1	0	0	0	0	1	0	0	5	0	0	3	7	1	18	203
4:55 PM	0	0	0	1	0	0	0	5	0	0	4	0	0	5	9	0	24	200
5:00 PM	0	0	0	0	0	0	0	2	0	0	4	0	0	5	7	0	18	189
5:05 PM	0	1	0	2	0	2	0	1	0	0	3	0	0	6	6	0	21	
5:10 PM	0	0	0	1	0	0	3	2	0	0	1	1	0	7	6	0	21	
5:15 PM	0	1	1	0	0	0	0	0	0	0	3	0	0	7	7	2	21	
5:20 PM	0	0	0	0	0	1	0	4	0	0	1	0	0	1	6	1	14	
5:25 PM	0	0	0	1	0	0	0	1	0	0	1	0	0	3	5	1	12	
5:30 PM	0	0	2	0	0	0	0	1	0	0	1	1	0	5	2	1	13	
5:35 PM	0	1	0	0	0	1	0	0	0	1	3	0	0	5	2	0	13	
5:40 PM	0	0	0	0	0	1	1	1	0	1	4	0	0	4	3	1	16	
5:45 PM	0	0	1	0	0	1	0	0	0	0	1	1	0	3	5	0	12	
5:50 PM	0	0	0	0	0	1	1	0	0	1	2	1	0	1	6	2	15	
5:55 PM	0	0	0	0	0	1	0	3	0	0	0	0	0	5	4	0	13	
Count Total	0	11	8	9	0	15	9	38	0	7	54	6	0	90	117	19	383	
Peak Hour	0	4	3	6	0	7	4	26	0	2	31	3	0	48	69	11	214	

Location: 4 Janz Rd & Humorist Rd PM

Traffic Counts - Heavy Vehicles, Bicycles on Road, and Pedestrians/Bicycles on Crosswalk

Interval Start Time	Heavy Vehicles					Interval Start Time	Bicycles on Roadway					Interval Start Time	Pedestrians/Bicycles on Crosswalk				
	EB	NB	WB	SB	Total		EB	NB	WB	SB	Total		EB	NB	WB	SB	Total
4:00 PM	0	0	0	0	0	4:00 PM	0	0	0	0	0	4:00 PM	0	0	0	0	0
4:05 PM	0	0	0	0	0	4:05 PM	0	0	0	0	0	4:05 PM	0	0	0	0	0
4:10 PM	0	0	0	0	0	4:10 PM	0	0	0	0	0	4:10 PM	0	0	0	0	0
4:15 PM	0	1	0	0	1	4:15 PM	0	0	0	0	0	4:15 PM	0	0	0	0	0
4:20 PM	0	0	0	0	0	4:20 PM	0	0	0	0	0	4:20 PM	0	0	0	0	0
4:25 PM	0	0	0	0	0	4:25 PM	0	0	0	0	0	4:25 PM	0	0	0	0	0
4:30 PM	0	0	0	0	0	4:30 PM	0	0	0	0	0	4:30 PM	0	0	0	0	0
4:35 PM	0	0	0	0	0	4:35 PM	0	0	0	0	0	4:35 PM	0	0	0	0	0
4:40 PM	0	0	0	0	0	4:40 PM	0	0	0	0	0	4:40 PM	0	0	0	0	0
4:45 PM	0	0	0	0	0	4:45 PM	0	0	0	0	0	4:45 PM	0	0	0	0	0
4:50 PM	0	0	0	0	0	4:50 PM	0	0	0	0	0	4:50 PM	0	0	0	0	0
4:55 PM	0	0	0	0	0	4:55 PM	0	0	0	0	0	4:55 PM	0	0	0	0	0
5:00 PM	0	0	0	0	0	5:00 PM	0	0	0	0	0	5:00 PM	0	0	0	0	0
5:05 PM	0	0	1	1	2	5:05 PM	0	0	0	0	0	5:05 PM	0	0	0	0	0
5:10 PM	0	0	0	0	0	5:10 PM	0	0	0	0	0	5:10 PM	0	0	0	0	0
5:15 PM	0	0	0	0	0	5:15 PM	0	0	0	0	0	5:15 PM	0	0	0	0	0
5:20 PM	0	0	0	0	0	5:20 PM	0	0	0	0	0	5:20 PM	0	0	0	0	0
5:25 PM	0	0	0	0	0	5:25 PM	0	0	0	0	0	5:25 PM	0	0	0	0	0
5:30 PM	0	0	0	0	0	5:30 PM	0	0	0	0	0	5:30 PM	0	0	0	0	0
5:35 PM	0	0	0	0	0	5:35 PM	0	0	0	0	0	5:35 PM	0	0	0	0	0
5:40 PM	0	0	0	0	0	5:40 PM	0	0	0	0	0	5:40 PM	0	0	0	0	0
5:45 PM	0	0	0	1	1	5:45 PM	0	0	0	0	0	5:45 PM	0	0	0	0	0
5:50 PM	0	0	0	0	0	5:50 PM	0	0	0	0	0	5:50 PM	0	0	0	0	0
5:55 PM	0	0	0	0	0	5:55 PM	0	0	0	0	0	5:55 PM	0	0	0	0	0
Count Total	0	1	1	2	4	Count Total	0	0	0	0	0	Count Total	0	0	0	0	0
Peak Hour	0	0	1	1	2	Peak Hour	0	0	0	0	0	Peak Hour	0	0	0	0	0

ALL TRAFFIC DATA SERVICES
(303) 216-2439
www.alltrafficdata.net

Location: 5 Quincy Rd & Hanson Loop Rd AM
Date: Thursday, January 20, 2022
Peak Hour: 07:15 AM - 08:15 AM
Peak 15-Minutes: 07:40 AM - 07:55 AM

Peak Hour

Motorized Vehicles

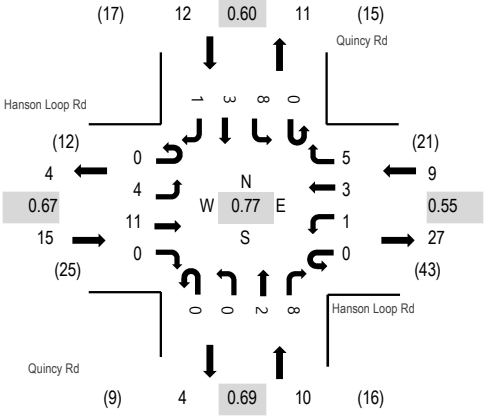

Heavy Vehicles

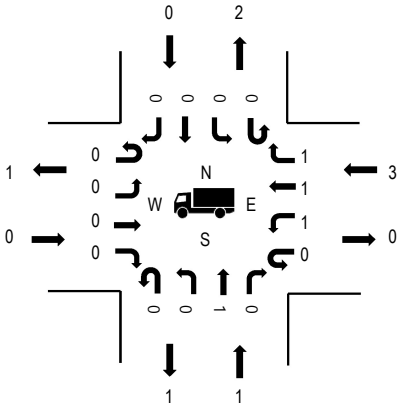

Pedestrians

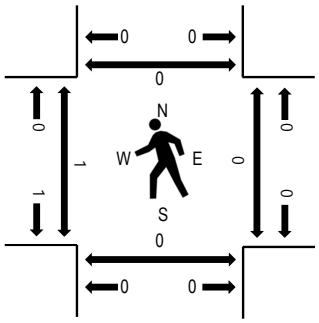

Note: Total study counts contained in parentheses.

	HV%	PHF
EB	0.0%	0.67
WB	33.3%	0.55
NB	10.0%	0.69
SB	0.0%	0.60
All	8.7%	0.77

Traffic Counts - Motorized Vehicles

Interval Start Time	Hanson Loop Rd Eastbound				Hanson Loop Rd Westbound				Quincy Rd Northbound				Quincy Rd Southbound				Total	Rolling Hour
	U-Turn	Left	Thru	Right	U-Turn	Left	Thru	Right	U-Turn	Left	Thru	Right	U-Turn	Left	Thru	Right		
7:00 AM	0	0	0	0	0	0	1	1	0	0	0	0	0	0	0	0	2	41
7:05 AM	0	0	1	0	0	0	0	0	0	0	0	0	0	0	0	0	1	42
7:10 AM	0	0	0	0	0	0	1	0	0	0	0	0	0	0	0	0	1	42
7:15 AM	0	0	1	0	0	0	1	0	0	0	0	1	0	2	0	0	5	46
7:20 AM	0	0	0	0	0	0	1	1	0	0	0	1	0	1	0	0	4	44
7:25 AM	0	1	2	0	0	0	0	0	0	0	1	1	0	0	0	0	5	42
7:30 AM	0	0	2	0	0	0	0	0	0	0	0	1	0	0	0	0	3	42
7:35 AM	0	0	1	0	0	1	0	0	0	0	0	0	0	1	0	0	3	39
7:40 AM	0	0	1	0	0	0	0	2	0	0	0	0	0	0	1	1	5	41
7:45 AM	0	1	0	0	0	0	0	0	0	0	0	1	0	1	1	0	4	39
7:50 AM	0	1	1	0	0	0	1	0	0	0	0	2	0	1	0	0	6	38
7:55 AM	0	1	0	0	0	0	0	0	0	0	0	1	0	0	0	0	2	35
8:00 AM	0	0	0	0	0	0	0	1	0	0	0	0	0	1	1	0	3	38
8:05 AM	0	0	0	0	0	0	0	0	0	0	0	0	0	1	0	0	1	
8:10 AM	0	0	3	0	0	0	0	1	0	0	1	0	0	0	0	0	5	
8:15 AM	0	0	2	0	0	0	0	0	0	0	0	1	0	0	0	0	3	
8:20 AM	0	0	0	0	0	0	0	1	0	0	0	0	0	1	0	0	2	
8:25 AM	0	0	2	0	0	0	0	1	0	0	0	1	0	0	0	1	5	
8:30 AM	0	0	0	0	0	0	0	0	0	0	0	0	0	0	0	0	0	
8:35 AM	0	0	0	0	0	1	3	0	0	1	0	0	0	0	0	0	5	
8:40 AM	0	0	0	0	0	0	0	0	0	0	0	3	0	0	0	0	3	
8:45 AM	0	0	2	0	0	0	0	0	0	0	0	0	0	1	0	0	3	
8:50 AM	0	1	1	0	0	0	0	0	0	0	0	0	0	0	1	0	3	
8:55 AM	0	0	1	0	0	3	0	0	0	0	0	0	0	0	0	1	5	
Count Total	0	5	20	0	0	5	8	8	0	1	2	13	0	10	4	3	79	
Peak Hour	0	4	11	0	0	1	3	5	0	0	2	8	0	8	3	1	46	

Location: 5 Quincy Rd & Hanson Loop Rd AM

Traffic Counts - Heavy Vehicles, Bicycles on Road, and Pedestrians/Bicycles on Crosswalk

Interval Start Time	Heavy Vehicles					Interval Start Time	Bicycles on Roadway					Interval Start Time	Pedestrians/Bicycles on Crosswalk				
	EB	NB	WB	SB	Total		EB	NB	WB	SB	Total		EB	NB	WB	SB	Total
7:00 AM	0	0	0	0	0	7:00 AM	0	0	0	0	0	7:00 AM	0	0	0	0	0
7:05 AM	0	0	0	0	0	7:05 AM	0	0	0	0	0	7:05 AM	0	0	0	0	0
7:10 AM	0	0	1	0	1	7:10 AM	0	0	0	0	0	7:10 AM	0	0	0	0	0
7:15 AM	0	0	0	0	0	7:15 AM	0	0	0	0	0	7:15 AM	0	0	0	0	0
7:20 AM	0	0	1	0	1	7:20 AM	0	0	0	0	0	7:20 AM	0	0	0	0	0
7:25 AM	0	1	0	0	1	7:25 AM	0	0	0	0	0	7:25 AM	0	0	0	0	0
7:30 AM	0	0	0	0	0	7:30 AM	0	0	0	0	0	7:30 AM	0	0	0	0	0
7:35 AM	0	0	1	0	1	7:35 AM	0	0	0	0	0	7:35 AM	0	0	0	0	0
7:40 AM	0	0	0	0	0	7:40 AM	0	0	0	0	0	7:40 AM	0	0	0	0	0
7:45 AM	0	0	0	0	0	7:45 AM	0	0	0	0	0	7:45 AM	0	0	0	0	0
7:50 AM	0	0	0	0	0	7:50 AM	0	0	0	0	0	7:50 AM	1	0	0	0	1
7:55 AM	0	0	0	0	0	7:55 AM	0	0	0	0	0	7:55 AM	0	0	0	0	0
8:00 AM	0	0	1	0	1	8:00 AM	0	0	0	0	0	8:00 AM	0	0	0	0	0
8:05 AM	0	0	0	0	0	8:05 AM	0	0	0	0	0	8:05 AM	0	0	0	0	0
8:10 AM	0	0	0	0	0	8:10 AM	0	0	0	0	0	8:10 AM	0	0	0	0	0
8:15 AM	0	0	0	0	0	8:15 AM	0	0	0	0	0	8:15 AM	0	0	0	0	0
8:20 AM	0	0	0	0	0	8:20 AM	0	0	0	0	0	8:20 AM	0	0	0	0	0
8:25 AM	0	0	0	0	0	8:25 AM	0	0	0	0	0	8:25 AM	0	0	0	0	0
8:30 AM	0	0	0	0	0	8:30 AM	0	0	0	0	0	8:30 AM	0	0	0	0	0
8:35 AM	0	0	0	0	0	8:35 AM	0	0	0	0	0	8:35 AM	0	0	0	0	0
8:40 AM	0	0	0	0	0	8:40 AM	0	0	0	0	0	8:40 AM	0	0	0	0	0
8:45 AM	0	0	0	0	0	8:45 AM	0	0	0	0	0	8:45 AM	0	0	0	0	0
8:50 AM	0	0	0	0	0	8:50 AM	0	0	0	0	0	8:50 AM	0	0	0	0	0
8:55 AM	0	0	0	0	0	8:55 AM	0	0	0	0	0	8:55 AM	0	0	0	0	0
Count Total	0	1	4	0	5	Count Total	0	0	0	0	0	Count Total	1	0	0	0	1
Peak Hour	0	1	3	0	4	Peak Hour	0	0	0	0	0	Peak Hour	1	0	0	0	1

Location: 6 Hwy 12 & Hanson Loop Rd AM

ALL TRAFFIC DATA SERVICES
(303) 216-2439
www.alltrafficdata.net

Location: 6 Hwy 12 & Hanson Loop Rd AM
Date: Thursday, January 20, 2022
Peak Hour: 07:00 AM - 08:00 AM
Peak 15-Minutes: 07:00 AM - 07:15 AM

Peak Hour

Motorized Vehicles

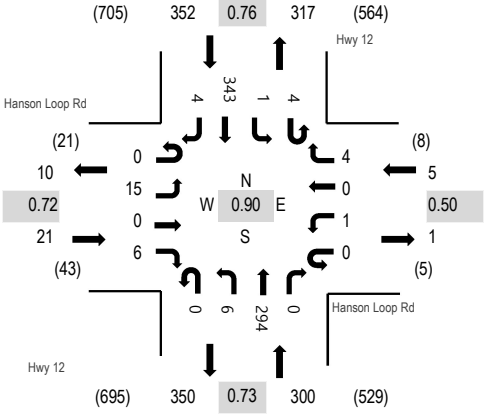

Heavy Vehicles

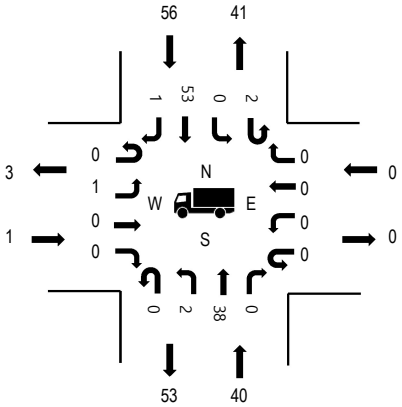

Pedestrians

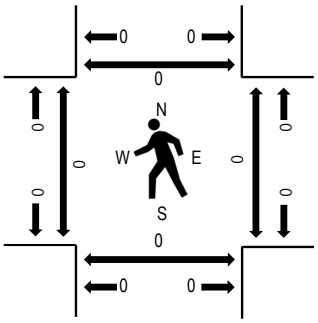

Note: Total study counts contained in parentheses.

	HV%	PHF
EB	4.8%	0.72
WB	0.0%	0.50
NB	13.3%	0.73
SB	15.9%	0.76
All	14.3%	0.90

Traffic Counts - Motorized Vehicles

Interval Start Time	Hanson Loop Rd Eastbound				Hanson Loop Rd Westbound				Hwy 12 Northbound				Hwy 12 Southbound				Total	Rolling Hour
	U-Turn	Left	Thru	Right	U-Turn	Left	Thru	Right	U-Turn	Left	Thru	Right	U-Turn	Left	Thru	Right		
7:00 AM	0	0	0	0	0	0	0	1	0	1	32	0	0	0	25	1	60	678
7:05 AM	0	0	0	1	0	0	0	0	0	0	31	0	1	0	23	0	56	656
7:10 AM	0	0	0	0	0	1	0	0	0	1	38	0	0	0	33	0	73	644
7:15 AM	0	2	0	1	0	0	0	0	0	0	20	0	1	0	27	1	52	628
7:20 AM	0	1	0	1	0	0	0	0	0	2	22	0	0	0	23	0	49	631
7:25 AM	0	1	0	2	0	0	0	0	0	0	18	0	1	0	40	0	62	625
7:30 AM	0	2	0	0	0	0	0	0	0	0	18	0	1	0	27	0	48	629
7:35 AM	0	3	0	0	0	0	0	1	0	0	23	0	0	0	34	1	62	638
7:40 AM	0	1	0	0	0	0	0	1	0	2	19	0	0	0	32	0	55	643
7:45 AM	0	2	0	0	0	0	0	1	0	0	21	0	0	1	32	0	57	638
7:50 AM	0	2	0	1	0	0	0	0	0	0	26	0	0	0	25	1	55	623
7:55 AM	0	1	0	0	0	0	0	0	0	0	26	0	0	0	22	0	49	616
8:00 AM	0	0	1	0	0	0	0	0	0	0	16	0	0	0	20	1	38	607
8:05 AM	0	0	0	1	0	0	0	1	0	0	17	0	0	1	24	0	44	
8:10 AM	0	3	0	0	0	2	0	0	0	0	18	0	0	0	33	1	57	
8:15 AM	0	2	0	0	0	0	0	0	0	0	25	0	0	0	28	0	55	
8:20 AM	0	3	0	1	0	0	0	0	0	0	17	0	0	0	21	1	43	
8:25 AM	0	3	0	0	0	0	0	0	0	0	19	0	2	0	41	1	66	
8:30 AM	0	0	0	0	0	0	0	0	0	0	22	0	0	0	35	0	57	
8:35 AM	0	0	0	0	0	0	0	0	0	2	24	0	0	0	39	2	67	
8:40 AM	0	3	0	0	0	0	0	0	0	0	15	0	1	1	30	0	50	
8:45 AM	0	3	0	0	0	0	0	0	0	0	13	0	0	0	26	0	42	
8:50 AM	0	1	0	0	0	0	0	0	0	0	20	1	0	0	26	0	48	
8:55 AM	0	1	0	0	0	0	0	0	0	2	18	0	0	0	18	1	40	
Count Total	0	34	1	8	0	3	0	5	0	10	518	1	7	3	684	11	1,285	
Peak Hour	0	15	0	6	0	1	0	4	0	6	294	0	4	1	343	4	678	

Location: 6 Hwy 12 & Hanson Loop Rd AM

Traffic Counts - Heavy Vehicles, Bicycles on Road, and Pedestrians/Bicycles on Crosswalk

Interval Start Time	Heavy Vehicles					Interval Start Time	Bicycles on Roadway					Interval Start Time	Pedestrians/Bicycles on Crosswalk				
	EB	NB	WB	SB	Total		EB	NB	WB	SB	Total		EB	NB	WB	SB	Total
7:00 AM	0	5	0	5	10	7:00 AM	0	0	0	0	0	7:00 AM	0	0	0	0	0
7:05 AM	0	1	0	3	4	7:05 AM	0	0	0	0	0	7:05 AM	0	0	0	0	0
7:10 AM	0	4	0	3	7	7:10 AM	0	0	0	0	0	7:10 AM	0	0	0	0	0
7:15 AM	0	2	0	1	3	7:15 AM	0	0	0	0	0	7:15 AM	0	0	0	0	0
7:20 AM	0	4	0	2	6	7:20 AM	0	0	0	0	0	7:20 AM	0	0	0	0	0
7:25 AM	0	0	0	8	8	7:25 AM	0	0	0	0	0	7:25 AM	0	0	0	0	0
7:30 AM	0	2	0	4	6	7:30 AM	0	0	0	0	0	7:30 AM	0	0	0	0	0
7:35 AM	1	2	0	6	9	7:35 AM	0	0	0	0	0	7:35 AM	0	0	0	0	0
7:40 AM	0	4	0	8	12	7:40 AM	0	0	0	0	0	7:40 AM	0	0	0	0	0
7:45 AM	0	4	0	5	9	7:45 AM	0	0	0	0	0	7:45 AM	0	0	0	0	0
7:50 AM	0	7	0	4	11	7:50 AM	0	0	0	0	0	7:50 AM	0	0	0	0	0
7:55 AM	0	5	0	7	12	7:55 AM	0	0	0	0	0	7:55 AM	0	0	0	0	0
8:00 AM	0	4	0	9	13	8:00 AM	0	0	0	0	0	8:00 AM	0	0	0	0	0
8:05 AM	0	5	0	6	11	8:05 AM	0	0	0	0	0	8:05 AM	0	0	0	0	0
8:10 AM	0	6	0	10	16	8:10 AM	0	0	0	0	0	8:10 AM	0	0	0	0	0
8:15 AM	0	7	0	6	13	8:15 AM	0	0	0	0	0	8:15 AM	0	0	0	0	0
8:20 AM	0	3	0	6	9	8:20 AM	0	0	0	0	0	8:20 AM	0	0	0	0	0
8:25 AM	0	4	0	4	8	8:25 AM	0	0	0	0	0	8:25 AM	0	0	0	0	0
8:30 AM	0	5	0	3	8	8:30 AM	0	0	0	0	0	8:30 AM	0	0	0	0	0
8:35 AM	0	6	0	13	19	8:35 AM	0	0	0	0	0	8:35 AM	0	0	0	0	0
8:40 AM	0	3	0	4	7	8:40 AM	0	0	0	0	0	8:40 AM	0	0	0	0	0
8:45 AM	0	3	0	5	8	8:45 AM	0	0	0	0	0	8:45 AM	0	0	0	0	0
8:50 AM	0	6	0	7	13	8:50 AM	0	0	0	0	0	8:50 AM	0	0	0	0	0
8:55 AM	0	7	0	3	10	8:55 AM	0	0	0	0	0	8:55 AM	0	0	0	0	0
Count Total	1	99	0	132	232	Count Total	0	0	0	0	0	Count Total	0	0	0	0	0
Peak Hour	1	40	0	56	97	Peak Hour	0	0	0	0	0	Peak Hour	0	0	0	0	0

Location: 7 Quincy Rd & South Dr AM

ALL TRAFFIC DATA SERVICES
(303) 216-2439
www.alltrafficdata.net

Location: 7 Quincy Rd & South Dr AM
Date: Thursday, January 20, 2022
Peak Hour: 07:05 AM - 08:05 AM
Peak 15-Minutes: 07:35 AM - 07:50 AM

Peak Hour

Motorized Vehicles

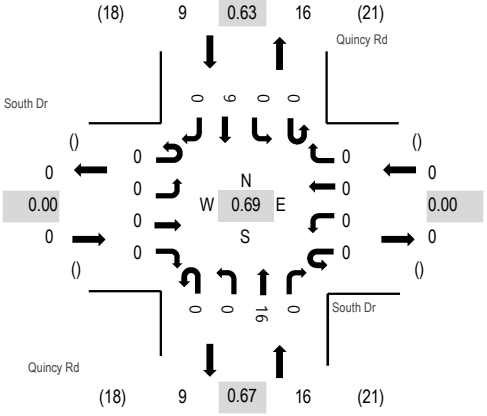

Heavy Vehicles

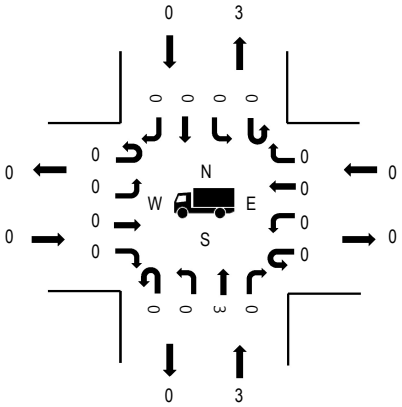

Pedestrians

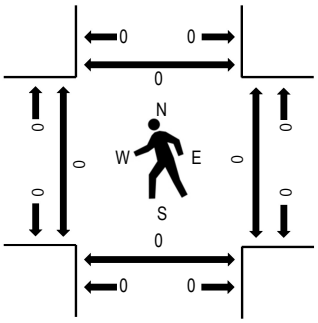

Note: Total study counts contained in parentheses.

	HV%	PHF
EB	0.0%	0.00
WB	0.0%	0.00
NB	18.8%	0.67
SB	0.0%	0.63
All	12.0%	0.69

Traffic Counts - Motorized Vehicles

Interval Start Time	South Dr Eastbound				South Dr Westbound				Quincy Rd Northbound				Quincy Rd Southbound				Total	Rolling Hour
	U-Turn	Left	Thru	Right	U-Turn	Left	Thru	Right	U-Turn	Left	Thru	Right	U-Turn	Left	Thru	Right		
7:00 AM	0	0	0	0	0	0	0	0	0	0	0	0	0	0	0	0	0	22
7:05 AM	0	0	0	0	0	0	0	0	0	0	1	0	0	0	1	0	2	25
7:10 AM	0	0	0	0	0	0	0	0	0	0	1	0	0	0	0	0	1	23
7:15 AM	0	0	0	0	0	0	0	0	0	0	1	0	0	0	2	0	3	22
7:20 AM	0	0	0	0	0	0	0	0	0	0	1	0	0	0	0	0	1	20
7:25 AM	0	0	0	0	0	0	0	0	0	0	3	0	0	0	0	0	3	21
7:30 AM	0	0	0	0	0	0	0	0	0	0	1	0	0	0	0	0	1	19
7:35 AM	0	0	0	0	0	0	0	0	0	0	0	0	0	0	2	0	2	21
7:40 AM	0	0	0	0	0	0	0	0	0	0	4	0	0	0	1	0	5	20
7:45 AM	0	0	0	0	0	0	0	0	0	0	1	0	0	0	1	0	2	15
7:50 AM	0	0	0	0	0	0	0	0	0	0	1	0	0	0	0	0	1	16
7:55 AM	0	0	0	0	0	0	0	0	0	0	0	0	0	0	1	0	1	17
8:00 AM	0	0	0	0	0	0	0	0	0	0	2	0	0	0	1	0	3	17
8:05 AM	0	0	0	0	0	0	0	0	0	0	0	0	0	0	0	0	0	
8:10 AM	0	0	0	0	0	0	0	0	0	0	0	0	0	0	0	0	0	
8:15 AM	0	0	0	0	0	0	0	0	0	0	1	0	0	0	0	0	1	
8:20 AM	0	0	0	0	0	0	0	0	0	0	0	0	0	0	2	0	2	
8:25 AM	0	0	0	0	0	0	0	0	0	0	0	0	0	0	1	0	1	
8:30 AM	0	0	0	0	0	0	0	0	0	0	2	0	0	0	1	0	3	
8:35 AM	0	0	0	0	0	0	0	0	0	0	0	0	0	0	1	0	1	
8:40 AM	0	0	0	0	0	0	0	0	0	0	0	0	0	0	0	0	0	
8:45 AM	0	0	0	0	0	0	0	0	0	0	1	0	0	0	2	0	3	
8:50 AM	0	0	0	0	0	0	0	0	0	0	1	0	0	0	1	0	2	
8:55 AM	0	0	0	0	0	0	0	0	0	0	0	0	0	0	1	0	1	
Count Total	0	0	0	0	0	0	0	0	0	0	21	0	0	0	18	0	39	
Peak Hour	0	0	0	0	0	0	0	0	0	0	16	0	0	0	9	0	25	

Location: 7 Quincy Rd & South Dr AM

Traffic Counts - Heavy Vehicles, Bicycles on Road, and Pedestrians/Bicycles on Crosswalk

Interval Start Time	Heavy Vehicles					Interval Start Time	Bicycles on Roadway					Interval Start Time	Pedestrians/Bicycles on Crosswalk				
	EB	NB	WB	SB	Total		EB	NB	WB	SB	Total		EB	NB	WB	SB	Total
7:00 AM	0	0	0	0	0	7:00 AM	0	0	0	0	0	7:00 AM	0	0	0	0	0
7:05 AM	0	0	0	0	0	7:05 AM	0	0	0	0	0	7:05 AM	0	0	0	0	0
7:10 AM	0	1	0	0	1	7:10 AM	0	0	0	0	0	7:10 AM	0	0	0	0	0
7:15 AM	0	0	0	0	0	7:15 AM	0	0	0	0	0	7:15 AM	0	0	0	0	0
7:20 AM	0	0	0	0	0	7:20 AM	0	0	0	0	0	7:20 AM	0	0	0	0	0
7:25 AM	0	1	0	0	1	7:25 AM	0	0	0	0	0	7:25 AM	0	0	0	0	0
7:30 AM	0	0	0	0	0	7:30 AM	0	0	0	0	0	7:30 AM	0	0	0	0	0
7:35 AM	0	0	0	0	0	7:35 AM	0	0	0	0	0	7:35 AM	0	0	0	0	0
7:40 AM	0	0	0	0	0	7:40 AM	0	0	0	0	0	7:40 AM	0	0	0	0	0
7:45 AM	0	0	0	0	0	7:45 AM	0	0	0	0	0	7:45 AM	0	0	0	0	0
7:50 AM	0	0	0	0	0	7:50 AM	0	0	0	0	0	7:50 AM	0	0	0	0	0
7:55 AM	0	0	0	0	0	7:55 AM	0	0	0	0	0	7:55 AM	0	0	0	0	0
8:00 AM	0	1	0	0	1	8:00 AM	0	0	0	0	0	8:00 AM	0	0	0	0	0
8:05 AM	0	0	0	0	0	8:05 AM	0	0	0	0	0	8:05 AM	0	0	0	0	0
8:10 AM	0	0	0	0	0	8:10 AM	0	0	0	0	0	8:10 AM	0	0	0	0	0
8:15 AM	0	0	0	0	0	8:15 AM	0	0	0	0	0	8:15 AM	0	0	0	0	0
8:20 AM	0	0	0	0	0	8:20 AM	0	0	0	0	0	8:20 AM	0	0	0	0	0
8:25 AM	0	0	0	0	0	8:25 AM	0	0	0	0	0	8:25 AM	0	0	0	0	0
8:30 AM	0	0	0	0	0	8:30 AM	0	0	0	0	0	8:30 AM	0	0	0	0	0
8:35 AM	0	0	0	0	0	8:35 AM	0	0	0	0	0	8:35 AM	0	0	0	0	0
8:40 AM	0	0	0	0	0	8:40 AM	0	0	0	0	0	8:40 AM	0	0	0	0	0
8:45 AM	0	0	0	0	0	8:45 AM	0	0	0	0	0	8:45 AM	0	0	0	0	0
8:50 AM	0	0	0	0	0	8:50 AM	0	0	0	0	0	8:50 AM	0	0	0	0	0
8:55 AM	0	0	0	0	0	8:55 AM	0	0	0	0	0	8:55 AM	0	0	0	0	0
Count Total	0	3	0	0	3	Count Total	0	0	0	0	0	Count Total	0	0	0	0	0
Peak Hour	0	3	0	0	3	Peak Hour	0	0	0	0	0	Peak Hour	0	0	0	0	0

Location: 8 Hanson Loop Rd & Red Ln AM

ALL TRAFFIC DATA SERVICES
(303) 216-2439
www.alltrafficdata.net

Location: 8 Hanson Loop Rd & Red Ln AM
Date: Thursday, January 20, 2022
Peak Hour: 07:05 AM - 08:05 AM
Peak 15-Minutes: 07:20 AM - 07:35 AM

Peak Hour

Motorized Vehicles

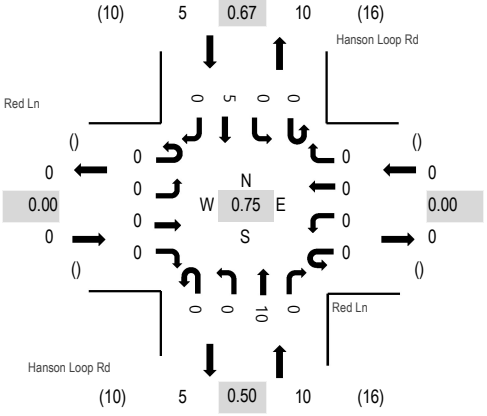

Heavy Vehicles

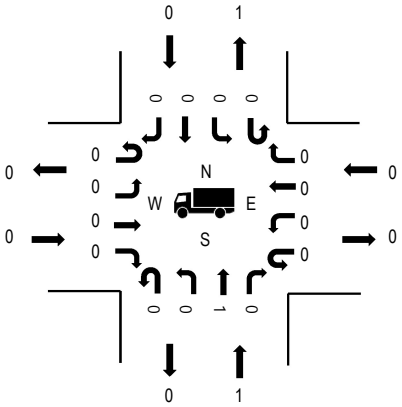

Pedestrians

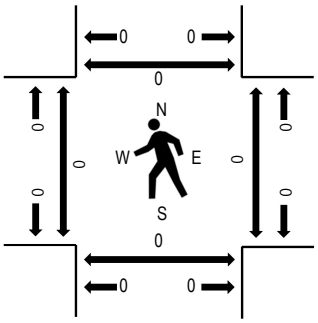

Note: Total study counts contained in parentheses.

	HV%	PHF
EB	0.0%	0.00
WB	0.0%	0.00
NB	10.0%	0.50
SB	0.0%	0.67
All	6.7%	0.75

Traffic Counts - Motorized Vehicles

Interval Start Time	Red Ln Eastbound				Red Ln Westbound				Hanson Loop Rd Northbound				Hanson Loop Rd Southbound				Total	Rolling Hour
	U-Turn	Left	Thru	Right	U-Turn	Left	Thru	Right	U-Turn	Left	Thru	Right	U-Turn	Left	Thru	Right		
7:00 AM	0	0	0	0	0	0	0	0	0	0	0	0	0	0	0	0	0	12
7:05 AM	0	0	0	0	0	0	0	0	0	0	2	0	0	0	1	0	3	15
7:10 AM	0	0	0	0	0	0	0	0	0	0	0	0	0	0	0	0	0	12
7:15 AM	0	0	0	0	0	0	0	0	0	0	1	0	0	0	0	0	1	12
7:20 AM	0	0	0	0	0	0	0	0	0	0	1	0	0	0	0	0	1	12
7:25 AM	0	0	0	0	0	0	0	0	0	0	1	0	0	0	0	0	1	12
7:30 AM	0	0	0	0	0	0	0	0	0	0	3	0	0	0	0	0	3	12
7:35 AM	0	0	0	0	0	0	0	0	0	0	0	0	0	0	1	0	1	11
7:40 AM	0	0	0	0	0	0	0	0	0	0	1	0	0	0	0	0	1	13
7:45 AM	0	0	0	0	0	0	0	0	0	0	0	0	0	0	0	0	0	15
7:50 AM	0	0	0	0	0	0	0	0	0	0	0	0	0	0	1	0	1	15
7:55 AM	0	0	0	0	0	0	0	0	0	0	0	0	0	0	0	0	0	14
8:00 AM	0	0	0	0	0	0	0	0	0	0	1	0	0	0	2	0	3	14
8:05 AM	0	0	0	0	0	0	0	0	0	0	0	0	0	0	0	0	0	
8:10 AM	0	0	0	0	0	0	0	0	0	0	0	0	0	0	0	0	0	
8:15 AM	0	0	0	0	0	0	0	0	0	0	0	0	0	0	1	0	1	
8:20 AM	0	0	0	0	0	0	0	0	0	0	0	0	0	0	1	0	1	
8:25 AM	0	0	0	0	0	0	0	0	0	0	1	0	0	0	0	0	1	
8:30 AM	0	0	0	0	0	0	0	0	0	0	2	0	0	0	0	0	2	
8:35 AM	0	0	0	0	0	0	0	0	0	0	2	0	0	0	1	0	3	
8:40 AM	0	0	0	0	0	0	0	0	0	0	1	0	0	0	2	0	3	
8:45 AM	0	0	0	0	0	0	0	0	0	0	0	0	0	0	0	0	0	
8:50 AM	0	0	0	0	0	0	0	0	0	0	0	0	0	0	0	0	0	
8:55 AM	0	0	0	0	0	0	0	0	0	0	0	0	0	0	0	0	0	
Count Total	0	0	0	0	0	0	0	0	0	0	16	0	0	0	10	0	26	
Peak Hour	0	0	0	0	0	0	0	0	0	0	10	0	0	0	5	0	15	

Location: 8 Hanson Loop Rd & Red Ln AM

Traffic Counts - Heavy Vehicles, Bicycles on Road, and Pedestrians/Bicycles on Crosswalk

Interval Start Time	Heavy Vehicles					Interval Start Time	Bicycles on Roadway					Interval Start Time	Pedestrians/Bicycles on Crosswalk				
	EB	NB	WB	SB	Total		EB	NB	WB	SB	Total		EB	NB	WB	SB	Total
7:00 AM	0	0	0	0	0	7:00 AM	0	0	0	0	0	7:00 AM	0	0	0	0	0
7:05 AM	0	0	0	0	0	7:05 AM	0	0	0	0	0	7:05 AM	0	0	0	0	0
7:10 AM	0	0	0	0	0	7:10 AM	0	0	0	0	0	7:10 AM	0	0	0	0	0
7:15 AM	0	1	0	0	1	7:15 AM	0	0	0	0	0	7:15 AM	0	0	0	0	0
7:20 AM	0	0	0	0	0	7:20 AM	0	0	0	0	0	7:20 AM	0	0	0	0	0
7:25 AM	0	0	0	0	0	7:25 AM	0	0	0	0	0	7:25 AM	0	0	0	0	0
7:30 AM	0	0	0	0	0	7:30 AM	0	0	0	0	0	7:30 AM	0	0	0	0	0
7:35 AM	0	0	0	0	0	7:35 AM	0	0	0	0	0	7:35 AM	0	0	0	0	0
7:40 AM	0	0	0	0	0	7:40 AM	0	0	0	0	0	7:40 AM	0	0	0	0	0
7:45 AM	0	0	0	0	0	7:45 AM	0	0	0	0	0	7:45 AM	0	0	0	0	0
7:50 AM	0	0	0	0	0	7:50 AM	0	0	0	0	0	7:50 AM	0	0	0	0	0
7:55 AM	0	0	0	0	0	7:55 AM	0	0	0	0	0	7:55 AM	0	0	0	0	0
8:00 AM	0	0	0	0	0	8:00 AM	0	0	0	0	0	8:00 AM	0	0	0	0	0
8:05 AM	0	0	0	0	0	8:05 AM	0	0	0	0	0	8:05 AM	0	0	0	0	0
8:10 AM	0	0	0	0	0	8:10 AM	0	0	0	0	0	8:10 AM	0	0	0	0	0
8:15 AM	0	0	0	0	0	8:15 AM	0	0	0	0	0	8:15 AM	0	0	0	0	0
8:20 AM	0	0	0	0	0	8:20 AM	0	0	0	0	0	8:20 AM	0	0	0	0	0
8:25 AM	0	0	0	0	0	8:25 AM	0	0	0	0	0	8:25 AM	0	0	0	0	0
8:30 AM	0	0	0	0	0	8:30 AM	0	0	0	0	0	8:30 AM	0	0	0	0	0
8:35 AM	0	0	0	0	0	8:35 AM	0	0	0	0	0	8:35 AM	0	0	0	0	0
8:40 AM	0	0	0	0	0	8:40 AM	0	0	0	0	0	8:40 AM	0	0	0	0	0
8:45 AM	0	0	0	0	0	8:45 AM	0	0	0	0	0	8:45 AM	0	0	0	0	0
8:50 AM	0	0	0	0	0	8:50 AM	0	0	0	0	0	8:50 AM	0	0	0	0	0
8:55 AM	0	0	0	0	0	8:55 AM	0	0	0	0	0	8:55 AM	0	0	0	0	0
Count Total	0	1	0	0	1	Count Total	0	0	0	0	0	Count Total	0	0	0	0	0
Peak Hour	0	1	0	0	1	Peak Hour	0	0	0	0	0	Peak Hour	0	0	0	0	0

ALL TRAFFIC DATA SERVICES
(303) 216-2439
www.alltrafficdata.net

Location: 5 Quincy Rd & Hanson Loop Rd PM
Date: Thursday, January 20, 2022
Peak Hour: 04:40 PM - 05:40 PM
Peak 15-Minutes: 05:05 PM - 05:20 PM

Peak Hour

Motorized Vehicles

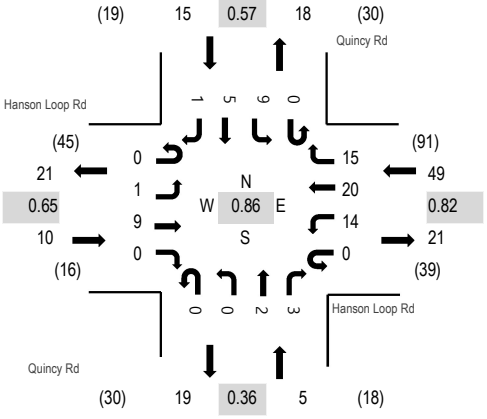

Heavy Vehicles

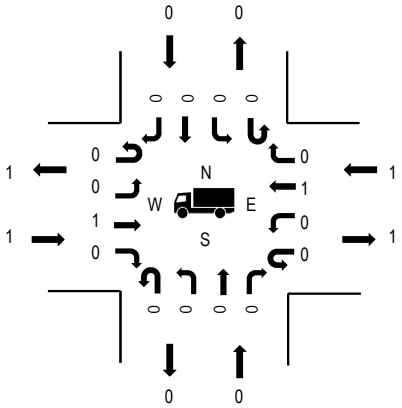

Pedestrians

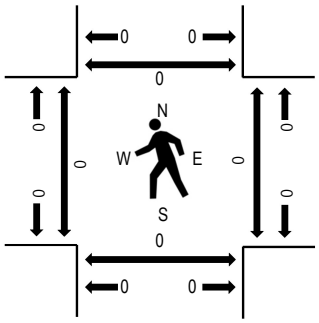

Note: Total study counts contained in parentheses.

	HV%	PHF
EB	10.0%	0.65
WB	2.0%	0.82
NB	0.0%	0.36
SB	0.0%	0.57
All	2.5%	0.86

Traffic Counts - Motorized Vehicles

Interval Start Time	Hanson Loop Rd Eastbound				Hanson Loop Rd Westbound				Quincy Rd Northbound				Quincy Rd Southbound				Total	Rolling Hour
	U-Turn	Left	Thru	Right	U-Turn	Left	Thru	Right	U-Turn	Left	Thru	Right	U-Turn	Left	Thru	Right		
4:00 PM	0	0	1	0	0	2	3	1	0	0	0	0	0	0	0	0	7	72
4:05 PM	0	0	1	0	0	0	1	1	0	0	1	2	0	0	0	0	6	70
4:10 PM	0	0	0	0	0	0	2	2	0	0	0	2	0	1	0	0	7	70
4:15 PM	0	0	0	0	0	1	3	1	0	1	0	1	0	0	0	0	7	73
4:20 PM	0	0	0	0	0	1	2	1	0	0	0	0	0	0	0	0	4	73
4:25 PM	0	0	0	0	0	0	1	1	0	0	0	1	0	1	0	0	4	74
4:30 PM	0	0	1	1	0	2	4	1	0	0	0	0	0	0	0	0	9	75
4:35 PM	0	0	1	0	0	0	0	0	0	0	1	1	0	1	0	0	4	76
4:40 PM	0	0	1	0	0	1	1	0	0	0	0	0	0	0	0	0	3	79
4:45 PM	0	0	3	0	0	1	2	1	0	0	0	0	0	4	0	0	11	79
4:50 PM	0	0	0	0	0	0	3	1	0	0	0	0	0	1	0	0	5	73
4:55 PM	0	0	0	0	0	2	1	0	0	0	0	0	0	1	1	0	5	72
5:00 PM	0	1	0	0	0	0	1	1	0	0	0	0	0	2	0	0	5	72
5:05 PM	0	0	0	0	0	1	1	4	0	0	0	0	0	0	0	0	6	
5:10 PM	0	0	2	0	0	3	1	1	0	0	0	0	0	0	3	0	10	
5:15 PM	0	0	2	0	0	3	1	0	0	0	0	0	0	1	0	0	7	
5:20 PM	0	0	0	0	0	1	1	2	0	0	0	1	0	0	0	0	5	
5:25 PM	0	0	1	0	0	0	1	1	0	0	0	0	0	0	1	1	5	
5:30 PM	0	0	0	0	0	2	4	1	0	0	2	1	0	0	0	0	10	
5:35 PM	0	0	0	0	0	0	3	3	0	0	0	1	0	0	0	0	7	
5:40 PM	0	0	0	0	0	1	0	1	0	0	0	0	0	0	0	1	3	
5:45 PM	0	0	0	0	0	1	2	1	0	0	0	1	0	0	0	0	5	
5:50 PM	0	0	0	0	0	1	2	0	0	0	0	1	0	0	0	0	4	
5:55 PM	0	0	1	0	0	1	2	0	0	0	0	1	0	0	0	0	5	
Count Total	0	1	14	1	0	24	42	25	0	1	4	13	0	12	5	2	144	
Peak Hour	0	1	9	0	0	14	20	15	0	0	2	3	0	9	5	1	79	

Location: 5 Quincy Rd & Hanson Loop Rd PM

Traffic Counts - Heavy Vehicles, Bicycles on Road, and Pedestrians/Bicycles on Crosswalk

Interval Start Time	Heavy Vehicles					Interval Start Time	Bicycles on Roadway					Interval Start Time	Pedestrians/Bicycles on Crosswalk				
	EB	NB	WB	SB	Total		EB	NB	WB	SB	Total		EB	NB	WB	SB	Total
4:00 PM	0	0	0	0	0	4:00 PM	0	0	0	0	0	4:00 PM	0	0	0	0	0
4:05 PM	0	0	0	0	0	4:05 PM	0	0	0	0	0	4:05 PM	0	0	0	0	0
4:10 PM	0	0	1	0	1	4:10 PM	0	0	0	0	0	4:10 PM	1	0	0	0	1
4:15 PM	0	0	0	0	0	4:15 PM	0	0	0	0	0	4:15 PM	0	0	0	0	0
4:20 PM	0	0	0	0	0	4:20 PM	0	0	0	0	0	4:20 PM	0	0	0	0	0
4:25 PM	0	0	0	0	0	4:25 PM	0	0	0	0	0	4:25 PM	1	0	0	0	1
4:30 PM	0	0	0	0	0	4:30 PM	0	0	0	0	0	4:30 PM	0	0	0	0	0
4:35 PM	0	0	0	0	0	4:35 PM	0	0	0	0	0	4:35 PM	0	0	0	0	0
4:40 PM	0	0	0	0	0	4:40 PM	0	0	0	0	0	4:40 PM	0	0	0	0	0
4:45 PM	0	0	0	0	0	4:45 PM	0	0	0	0	0	4:45 PM	0	0	0	0	0
4:50 PM	0	0	1	0	1	4:50 PM	0	0	0	0	0	4:50 PM	0	0	0	0	0
4:55 PM	0	0	0	0	0	4:55 PM	0	0	0	0	0	4:55 PM	0	0	0	0	0
5:00 PM	0	0	0	0	0	5:00 PM	0	0	0	0	0	5:00 PM	0	0	0	0	0
5:05 PM	0	0	0	0	0	5:05 PM	0	0	0	0	0	5:05 PM	0	0	0	0	0
5:10 PM	1	0	0	0	1	5:10 PM	0	0	0	0	0	5:10 PM	0	0	0	0	0
5:15 PM	0	0	0	0	0	5:15 PM	0	0	0	0	0	5:15 PM	0	0	0	0	0
5:20 PM	0	0	0	0	0	5:20 PM	0	0	0	0	0	5:20 PM	0	0	0	0	0
5:25 PM	0	0	0	0	0	5:25 PM	0	0	0	0	0	5:25 PM	0	0	0	0	0
5:30 PM	0	0	0	0	0	5:30 PM	0	0	0	0	0	5:30 PM	0	0	0	0	0
5:35 PM	0	0	0	0	0	5:35 PM	0	0	0	0	0	5:35 PM	0	0	0	0	0
5:40 PM	0	0	0	0	0	5:40 PM	0	0	0	0	0	5:40 PM	0	0	0	0	0
5:45 PM	0	0	0	0	0	5:45 PM	0	0	0	0	0	5:45 PM	0	0	0	0	0
5:50 PM	0	0	0	0	0	5:50 PM	0	0	0	0	0	5:50 PM	0	0	0	0	0
5:55 PM	0	0	0	0	0	5:55 PM	0	0	0	0	0	5:55 PM	0	0	0	0	0
Count Total	1	0	2	0	3	Count Total	0	0	0	0	0	Count Total	2	0	0	0	2
Peak Hour	1	0	1	0	2	Peak Hour	0	0	0	0	0	Peak Hour	0	0	0	0	0

Location: 6 Hwy 12 & Hanson Loop Rd PM

ALL TRAFFIC DATA SERVICES
(303) 216-2439
www.alltrafficdata.net

Location: 6 Hwy 12 & Hanson Loop Rd PM
Date: Thursday, January 20, 2022
Peak Hour: 04:00 PM - 05:00 PM
Peak 15-Minutes: 04:10 PM - 04:25 PM

Peak Hour

Motorized Vehicles

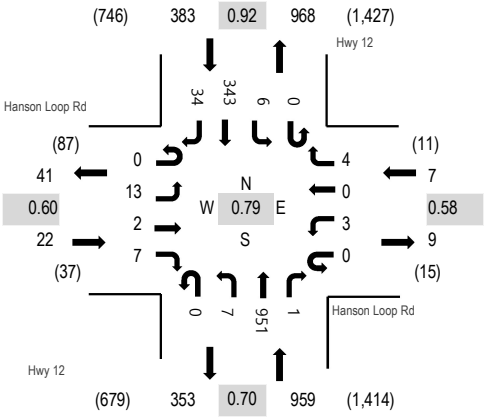

Heavy Vehicles

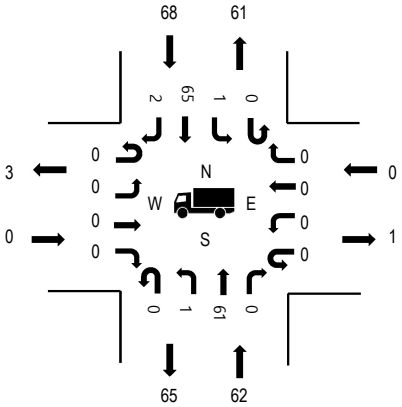

Pedestrians

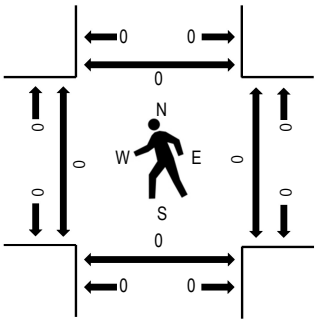

Note: Total study counts contained in parentheses.

	HV%	PHF
EB	0.0%	0.60
WB	0.0%	0.58
NB	6.5%	0.70
SB	17.8%	0.92
All	9.5%	0.79

Traffic Counts - Motorized Vehicles

Interval Start Time	Hanson Loop Rd Eastbound				Hanson Loop Rd Westbound				Hwy 12 Northbound				Hwy 12 Southbound				Total	Rolling Hour
	U-Turn	Left	Thru	Right	U-Turn	Left	Thru	Right	U-Turn	Left	Thru	Right	U-Turn	Left	Thru	Right		
4:00 PM	0	0	0	0	0	1	0	0	0	1	73	0	0	0	24	6	105	1,371
4:05 PM	0	2	1	0	0	0	0	1	0	1	73	0	0	0	32	0	110	1,354
4:10 PM	0	2	0	1	0	0	0	1	0	1	124	0	0	1	27	3	160	1,321
4:15 PM	0	1	0	0	0	0	0	0	0	1	129	0	0	0	28	2	161	1,237
4:20 PM	0	0	0	0	0	0	0	0	0	0	88	1	0	0	20	4	113	1,155
4:25 PM	0	2	0	0	0	0	0	1	0	1	85	0	0	1	36	1	127	1,100
4:30 PM	0	0	0	1	0	1	0	0	0	1	90	0	0	1	25	6	125	1,036
4:35 PM	0	2	1	0	0	0	0	0	0	0	76	0	0	1	35	0	115	993
4:40 PM	0	1	0	0	0	0	0	0	0	0	66	0	0	1	29	2	99	952
4:45 PM	0	2	0	4	0	1	0	0	0	0	58	0	0	0	32	4	101	916
4:50 PM	0	0	0	1	0	0	0	0	0	1	48	0	0	0	29	3	82	881
4:55 PM	0	1	0	0	0	0	0	1	0	0	41	0	0	1	26	3	73	845
5:00 PM	0	0	0	2	0	0	0	0	0	1	54	0	0	0	30	1	88	837
5:05 PM	0	0	0	0	0	0	1	0	0	0	43	0	1	0	27	5	77	
5:10 PM	0	0	1	1	0	0	0	0	0	0	39	1	1	0	28	5	76	
5:15 PM	0	1	0	2	0	0	0	0	0	0	53	0	0	0	19	4	79	
5:20 PM	0	0	0	1	0	0	1	1	0	1	29	0	0	0	23	2	58	
5:25 PM	0	1	0	0	0	0	0	0	0	0	32	0	1	0	27	2	63	
5:30 PM	0	0	1	0	0	0	0	0	0	0	36	0	1	0	39	5	82	
5:35 PM	0	0	0	0	0	0	0	0	0	0	40	0	0	0	28	6	74	
5:40 PM	0	1	0	0	0	0	0	0	0	1	31	0	0	0	28	2	63	
5:45 PM	0	1	0	0	0	1	0	0	0	1	33	1	0	1	26	2	66	
5:50 PM	0	1	0	0	0	0	0	0	0	1	20	0	0	0	22	2	46	
5:55 PM	0	1	1	0	0	0	0	0	0	1	37	0	1	0	22	2	65	
Count Total	0	19	5	13	0	4	2	5	0	13	1,398	3	5	7	662	72	2,208	
Peak Hour	0	13	2	7	0	3	0	4	0	7	951	1	0	6	343	34	1,371	

Location: 6 Hwy 12 & Hanson Loop Rd PM

Traffic Counts - Heavy Vehicles, Bicycles on Road, and Pedestrians/Bicycles on Crosswalk

Interval Start Time	Heavy Vehicles					Interval Start Time	Bicycles on Roadway					Interval Start Time	Pedestrians/Bicycles on Crosswalk				
	EB	NB	WB	SB	Total		EB	NB	WB	SB	Total		EB	NB	WB	SB	Total
4:00 PM	0	9	0	7	16	4:00 PM	0	0	0	0	0	4:00 PM	0	0	0	0	0
4:05 PM	0	7	0	13	20	4:05 PM	0	0	0	0	0	4:05 PM	0	0	0	0	0
4:10 PM	0	2	0	10	12	4:10 PM	0	0	0	0	0	4:10 PM	0	0	0	0	0
4:15 PM	0	7	0	5	12	4:15 PM	0	0	0	0	0	4:15 PM	0	0	0	0	0
4:20 PM	0	3	0	0	3	4:20 PM	0	0	0	0	0	4:20 PM	0	0	0	0	0
4:25 PM	0	2	0	7	9	4:25 PM	0	0	0	0	0	4:25 PM	0	0	0	0	0
4:30 PM	0	8	0	4	12	4:30 PM	0	0	0	0	0	4:30 PM	0	0	0	0	0
4:35 PM	0	6	0	4	10	4:35 PM	0	0	0	0	0	4:35 PM	0	0	0	0	0
4:40 PM	0	5	0	1	6	4:40 PM	0	0	0	0	0	4:40 PM	0	0	0	0	0
4:45 PM	0	2	0	3	5	4:45 PM	0	0	0	0	0	4:45 PM	0	0	0	0	0
4:50 PM	0	9	0	9	18	4:50 PM	0	0	0	0	0	4:50 PM	0	0	0	0	0
4:55 PM	0	2	0	5	7	4:55 PM	0	0	0	0	0	4:55 PM	0	0	0	0	0
5:00 PM	0	6	0	3	9	5:00 PM	0	0	0	0	0	5:00 PM	0	0	0	0	0
5:05 PM	0	5	0	5	10	5:05 PM	0	0	0	0	0	5:05 PM	0	0	0	0	0
5:10 PM	1	7	0	3	11	5:10 PM	0	0	0	0	0	5:10 PM	0	0	0	0	0
5:15 PM	0	7	0	2	9	5:15 PM	0	0	0	0	0	5:15 PM	0	0	0	0	0
5:20 PM	0	1	0	3	4	5:20 PM	0	0	0	0	0	5:20 PM	0	0	0	0	0
5:25 PM	0	1	0	6	7	5:25 PM	0	0	0	0	0	5:25 PM	0	0	0	0	0
5:30 PM	0	3	0	10	13	5:30 PM	0	0	0	0	0	5:30 PM	0	0	0	0	0
5:35 PM	0	9	0	4	13	5:35 PM	0	0	0	0	0	5:35 PM	0	0	0	0	0
5:40 PM	0	2	0	2	4	5:40 PM	0	0	0	0	0	5:40 PM	0	0	0	0	0
5:45 PM	0	2	1	0	3	5:45 PM	0	0	0	0	0	5:45 PM	0	0	0	0	0
5:50 PM	0	4	0	2	6	5:50 PM	0	0	0	0	0	5:50 PM	0	0	0	0	0
5:55 PM	0	2	0	3	5	5:55 PM	0	0	0	0	0	5:55 PM	0	0	0	0	0
Count Total	1	111	1	111	224	Count Total	0	0	0	0	0	Count Total	0	0	0	0	0
Peak Hour	0	62	0	68	130	Peak Hour	0	0	0	0	0	Peak Hour	0	0	0	0	0

Location: 7 Quincy Rd & South Dr PM

ALL TRAFFIC DATA SERVICES
(303) 216-2439
www.alltrafficdata.net

Location: 7 Quincy Rd & South Dr PM
Date: Thursday, January 20, 2022
Peak Hour: 04:00 PM - 05:00 PM
Peak 15-Minutes: 04:35 PM - 04:50 PM

Peak Hour

Motorized Vehicles

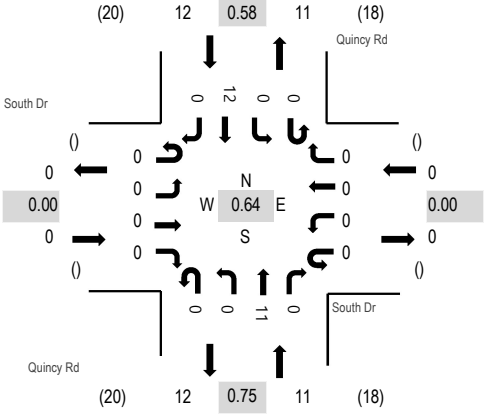

Heavy Vehicles

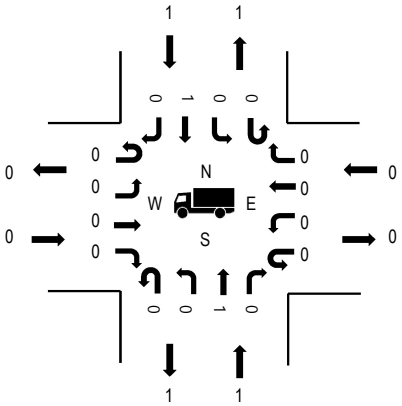

Pedestrians

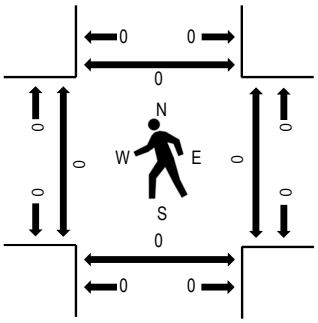

Note: Total study counts contained in parentheses.

	HV%	PHF
EB	0.0%	0.00
WB	0.0%	0.00
NB	9.1%	0.75
SB	8.3%	0.58
All	8.7%	0.64

Traffic Counts - Motorized Vehicles

Interval Start Time	South Dr Eastbound				South Dr Westbound				Quincy Rd Northbound				Quincy Rd Southbound				Total	Rolling Hour
	U-Turn	Left	Thru	Right	U-Turn	Left	Thru	Right	U-Turn	Left	Thru	Right	U-Turn	Left	Thru	Right		
4:00 PM	0	0	0	0	0	0	0	0	0	0	1	0	0	0	0	0	1	23
4:05 PM	0	0	0	0	0	0	0	0	0	0	0	0	0	0	1	0	1	23
4:10 PM	0	0	0	0	0	0	0	0	0	0	3	0	0	0	2	0	5	23
4:15 PM	0	0	0	0	0	0	0	0	0	0	1	0	0	0	0	0	1	19
4:20 PM	0	0	0	0	0	0	0	0	0	0	0	0	0	0	0	0	0	19
4:25 PM	0	0	0	0	0	0	0	0	0	0	1	0	0	0	0	0	1	19
4:30 PM	0	0	0	0	0	0	0	0	0	0	1	0	0	0	0	0	1	21
4:35 PM	0	0	0	0	0	0	0	0	0	0	1	0	0	0	2	0	3	21
4:40 PM	0	0	0	0	0	0	0	0	0	0	1	0	0	0	2	0	3	21
4:45 PM	0	0	0	0	0	0	0	0	0	0	1	0	0	0	2	0	3	19
4:50 PM	0	0	0	0	0	0	0	0	0	0	1	0	0	0	1	0	2	18
4:55 PM	0	0	0	0	0	0	0	0	0	0	0	0	0	0	2	0	2	17
5:00 PM	0	0	0	0	0	0	0	0	0	0	1	0	0	0	0	0	1	15
5:05 PM	0	0	0	0	0	0	0	0	0	0	1	0	0	0	0	0	1	
5:10 PM	0	0	0	0	0	0	0	0	0	0	0	0	0	0	1	0	1	
5:15 PM	0	0	0	0	0	0	0	0	0	0	0	0	0	0	1	0	1	
5:20 PM	0	0	0	0	0	0	0	0	0	0	0	0	0	0	0	0	0	
5:25 PM	0	0	0	0	0	0	0	0	0	0	0	0	0	0	3	0	3	
5:30 PM	0	0	0	0	0	0	0	0	0	0	1	0	0	0	0	0	1	
5:35 PM	0	0	0	0	0	0	0	0	0	0	2	0	0	0	1	0	3	
5:40 PM	0	0	0	0	0	0	0	0	0	0	1	0	0	0	0	0	1	
5:45 PM	0	0	0	0	0	0	0	0	0	0	1	0	0	0	1	0	2	
5:50 PM	0	0	0	0	0	0	0	0	0	0	0	0	0	0	1	0	1	
5:55 PM	0	0	0	0	0	0	0	0	0	0	0	0	0	0	0	0	0	
Count Total	0	0	0	0	0	0	0	0	0	0	18	0	0	0	20	0	38	
Peak Hour	0	0	0	0	0	0	0	0	0	0	11	0	0	0	12	0	23	

Location: 7 Quincy Rd & South Dr PM

Traffic Counts - Heavy Vehicles, Bicycles on Road, and Pedestrians/Bicycles on Crosswalk

Interval Start Time	Heavy Vehicles					Interval Start Time	Bicycles on Roadway					Interval Start Time	Pedestrians/Bicycles on Crosswalk				
	EB	NB	WB	SB	Total		EB	NB	WB	SB	Total		EB	NB	WB	SB	Total
4:00 PM	0	0	0	0	0	4:00 PM	0	0	0	0	0	4:00 PM	0	0	0	0	0
4:05 PM	0	0	0	0	0	4:05 PM	0	0	0	0	0	4:05 PM	0	0	0	0	0
4:10 PM	0	0	0	0	0	4:10 PM	0	0	0	0	0	4:10 PM	0	0	0	0	0
4:15 PM	0	1	0	0	1	4:15 PM	0	0	0	0	0	4:15 PM	0	0	0	0	0
4:20 PM	0	0	0	0	0	4:20 PM	0	0	0	0	0	4:20 PM	0	0	0	0	0
4:25 PM	0	0	0	0	0	4:25 PM	0	0	0	0	0	4:25 PM	0	0	0	0	0
4:30 PM	0	0	0	0	0	4:30 PM	0	0	0	0	0	4:30 PM	0	0	0	0	0
4:35 PM	0	0	0	0	0	4:35 PM	0	0	0	0	0	4:35 PM	0	0	0	0	0
4:40 PM	0	0	0	1	1	4:40 PM	0	0	0	0	0	4:40 PM	0	0	0	0	0
4:45 PM	0	0	0	0	0	4:45 PM	0	0	0	0	0	4:45 PM	0	0	0	0	0
4:50 PM	0	0	0	0	0	4:50 PM	0	0	0	0	0	4:50 PM	0	0	0	0	0
4:55 PM	0	0	0	0	0	4:55 PM	0	0	0	0	0	4:55 PM	0	0	0	0	0
5:00 PM	0	0	0	0	0	5:00 PM	0	0	0	0	0	5:00 PM	0	0	0	0	0
5:05 PM	0	0	0	0	0	5:05 PM	0	0	0	0	0	5:05 PM	0	0	0	0	0
5:10 PM	0	0	0	0	0	5:10 PM	0	0	0	0	0	5:10 PM	0	0	0	0	0
5:15 PM	0	0	0	0	0	5:15 PM	0	0	0	0	0	5:15 PM	0	0	0	0	0
5:20 PM	0	0	0	0	0	5:20 PM	0	0	0	0	0	5:20 PM	0	0	0	0	0
5:25 PM	0	0	0	0	0	5:25 PM	0	0	0	0	0	5:25 PM	0	0	0	0	0
5:30 PM	0	0	0	0	0	5:30 PM	0	0	0	0	0	5:30 PM	0	0	0	0	0
5:35 PM	0	0	0	0	0	5:35 PM	0	0	0	0	0	5:35 PM	0	0	0	0	0
5:40 PM	0	0	0	0	0	5:40 PM	0	0	0	0	0	5:40 PM	0	0	0	0	0
5:45 PM	0	0	0	0	0	5:45 PM	0	0	0	0	0	5:45 PM	0	0	0	0	0
5:50 PM	0	0	0	0	0	5:50 PM	0	0	0	0	0	5:50 PM	0	0	0	0	0
5:55 PM	0	0	0	0	0	5:55 PM	0	0	0	0	0	5:55 PM	0	0	0	0	0
Count Total	0	1	0	1	2	Count Total	0	0	0	0	0	Count Total	0	0	0	0	0
Peak Hour	0	1	0	1	2	Peak Hour	0	0	0	0	0	Peak Hour	0	0	0	0	0

Location: 8 Hanson Loop Rd & Red Ln PM

ALL TRAFFIC DATA SERVICES
(303) 216-2439
www.alltrafficdata.net

Location: 8 Hanson Loop Rd & Red Ln PM
Date: Thursday, January 20, 2022
Peak Hour: 04:20 PM - 05:20 PM
Peak 15-Minutes: 04:30 PM - 04:45 PM

Peak Hour

Motorized Vehicles

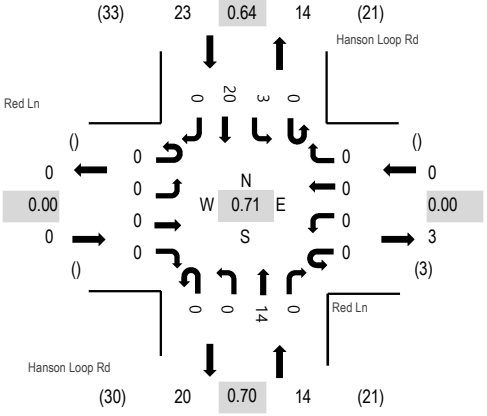

Heavy Vehicles

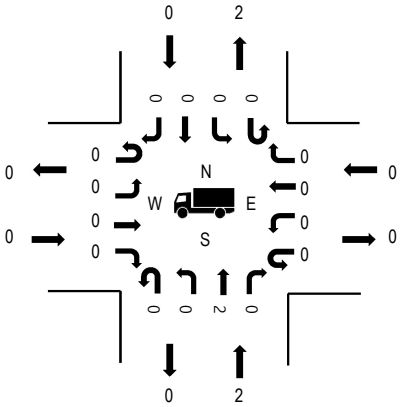

Pedestrians

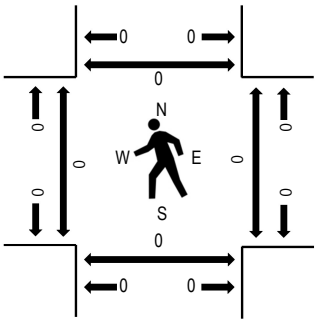

Note: Total study counts contained in parentheses.

	HV%	PHF
EB	0.0%	0.00
WB	0.0%	0.00
NB	14.3%	0.70
SB	0.0%	0.64
All	5.4%	0.71

Traffic Counts - Motorized Vehicles

Interval Start Time	Red Ln Eastbound				Red Ln Westbound				Hanson Loop Rd Northbound				Hanson Loop Rd Southbound				Total	Rolling Hour
	U-Turn	Left	Thru	Right	U-Turn	Left	Thru	Right	U-Turn	Left	Thru	Right	U-Turn	Left	Thru	Right		
4:00 PM	0	0	0	0	0	0	0	0	0	0	1	0	0	0	1	0	2	31
4:05 PM	0	0	0	0	0	0	0	0	0	0	1	0	0	0	1	0	2	33
4:10 PM	0	0	0	0	0	0	0	0	0	0	2	0	0	0	0	0	2	35
4:15 PM	0	0	0	0	0	0	0	0	0	0	0	0	0	0	0	0	0	36
4:20 PM	0	0	0	0	0	0	0	0	0	0	1	0	0	0	1	0	2	37
4:25 PM	0	0	0	0	0	0	0	0	0	0	1	0	0	0	2	0	3	36
4:30 PM	0	0	0	0	0	0	0	0	0	0	1	0	0	0	6	0	7	37
4:35 PM	0	0	0	0	0	0	0	0	0	0	0	0	0	0	0	0	0	31
4:40 PM	0	0	0	0	0	0	0	0	0	0	4	0	0	0	2	0	6	32
4:45 PM	0	0	0	0	0	0	0	0	0	0	0	0	0	0	1	0	1	27
4:50 PM	0	0	0	0	0	0	0	0	0	0	0	0	0	1	1	0	2	27
4:55 PM	0	0	0	0	0	0	0	0	0	0	2	0	0	0	2	0	4	27
5:00 PM	0	0	0	0	0	0	0	0	0	0	1	0	0	2	1	0	4	23
5:05 PM	0	0	0	0	0	0	0	0	0	0	2	0	0	0	2	0	4	
5:10 PM	0	0	0	0	0	0	0	0	0	0	2	0	0	0	1	0	3	
5:15 PM	0	0	0	0	0	0	0	0	0	0	0	0	0	0	1	0	1	
5:20 PM	0	0	0	0	0	0	0	0	0	0	0	0	0	0	1	0	1	
5:25 PM	0	0	0	0	0	0	0	0	0	0	2	0	0	0	2	0	4	
5:30 PM	0	0	0	0	0	0	0	0	0	0	0	0	0	0	1	0	1	
5:35 PM	0	0	0	0	0	0	0	0	0	0	1	0	0	0	0	0	1	
5:40 PM	0	0	0	0	0	0	0	0	0	0	0	0	0	0	1	0	1	
5:45 PM	0	0	0	0	0	0	0	0	0	0	0	0	0	0	1	0	1	
5:50 PM	0	0	0	0	0	0	0	0	0	0	0	0	0	0	2	0	2	
5:55 PM	0	0	0	0	0	0	0	0	0	0	0	0	0	0	0	0	0	
Count Total	0	0	0	0	0	0	0	0	0	0	21	0	0	3	30	0	54	
Peak Hour	0	0	0	0	0	0	0	0	0	0	14	0	0	3	20	0	37	

Location: 8 Hanson Loop Rd & Red Ln PM

Traffic Counts - Heavy Vehicles, Bicycles on Road, and Pedestrians/Bicycles on Crosswalk

Interval Start Time	Heavy Vehicles					Interval Start Time	Bicycles on Roadway					Interval Start Time	Pedestrians/Bicycles on Crosswalk				
	EB	NB	WB	SB	Total		EB	NB	WB	SB	Total		EB	NB	WB	SB	Total
4:00 PM	0	0	0	0	0	4:00 PM	0	0	0	0	0	4:00 PM	0	0	0	0	0
4:05 PM	0	0	0	0	0	4:05 PM	0	0	0	0	0	4:05 PM	0	0	0	0	0
4:10 PM	0	0	0	0	0	4:10 PM	0	0	0	0	0	4:10 PM	0	0	0	0	0
4:15 PM	0	0	0	0	0	4:15 PM	0	0	0	0	0	4:15 PM	0	0	0	0	0
4:20 PM	0	0	0	0	0	4:20 PM	0	0	0	0	0	4:20 PM	0	0	0	0	0
4:25 PM	0	0	0	0	0	4:25 PM	0	0	0	0	0	4:25 PM	0	0	0	0	0
4:30 PM	0	0	0	0	0	4:30 PM	0	0	0	0	0	4:30 PM	0	0	0	0	0
4:35 PM	0	0	0	0	0	4:35 PM	0	0	0	0	0	4:35 PM	0	0	0	0	0
4:40 PM	0	0	0	0	0	4:40 PM	0	0	0	0	0	4:40 PM	0	0	0	0	0
4:45 PM	0	0	0	0	0	4:45 PM	0	0	0	0	0	4:45 PM	0	0	0	0	0
4:50 PM	0	0	0	0	0	4:50 PM	0	0	0	0	0	4:50 PM	0	0	0	0	0
4:55 PM	0	1	0	0	1	4:55 PM	0	0	0	0	0	4:55 PM	0	0	0	0	0
5:00 PM	0	1	0	0	1	5:00 PM	0	0	0	0	0	5:00 PM	0	0	0	0	0
5:05 PM	0	0	0	0	0	5:05 PM	0	0	0	0	0	5:05 PM	0	0	0	0	0
5:10 PM	0	0	0	0	0	5:10 PM	0	0	0	0	0	5:10 PM	0	0	0	0	0
5:15 PM	0	0	0	0	0	5:15 PM	0	0	0	0	0	5:15 PM	0	0	0	0	0
5:20 PM	0	0	0	0	0	5:20 PM	0	0	0	0	0	5:20 PM	0	0	0	0	0
5:25 PM	0	0	0	0	0	5:25 PM	0	0	0	0	0	5:25 PM	0	0	0	0	0
5:30 PM	0	0	0	0	0	5:30 PM	0	0	0	0	0	5:30 PM	0	0	0	0	0
5:35 PM	0	0	0	0	0	5:35 PM	0	0	0	0	0	5:35 PM	0	0	0	0	0
5:40 PM	0	0	0	0	0	5:40 PM	0	0	0	0	0	5:40 PM	0	0	0	0	0
5:45 PM	0	0	0	0	0	5:45 PM	0	0	0	0	0	5:45 PM	0	0	0	0	0
5:50 PM	0	0	0	0	0	5:50 PM	0	0	0	0	0	5:50 PM	0	0	0	0	0
5:55 PM	0	0	0	0	0	5:55 PM	0	0	0	0	0	5:55 PM	0	0	0	0	0
Count Total	0	2	0	0	2	Count Total	0	0	0	0	0	Count Total	0	0	0	0	0
Peak Hour	0	2	0	0	2	Peak Hour	0	0	0	0	0	Peak Hour	0	0	0	0	0

Appendix B

In-Process Projects

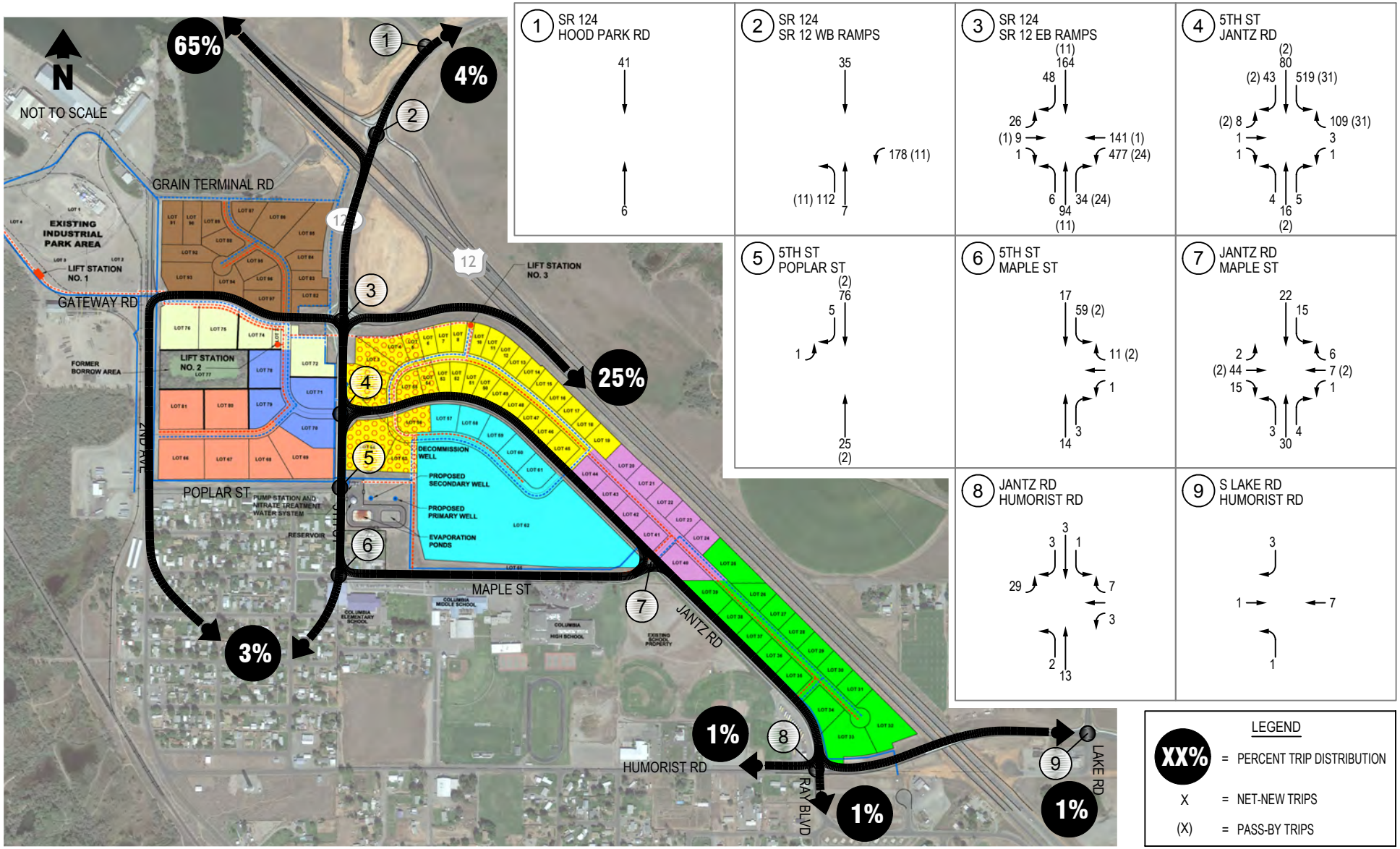

AM Project Trip Distribution and Assignment

Burbank Business Park

Q:\Projects\13\13037.00 - Burbank Business Park\Graphics\13037_graphic01 <D> robertm 04/11/13 11:55

transpoGROUP

FIGURE **4a**

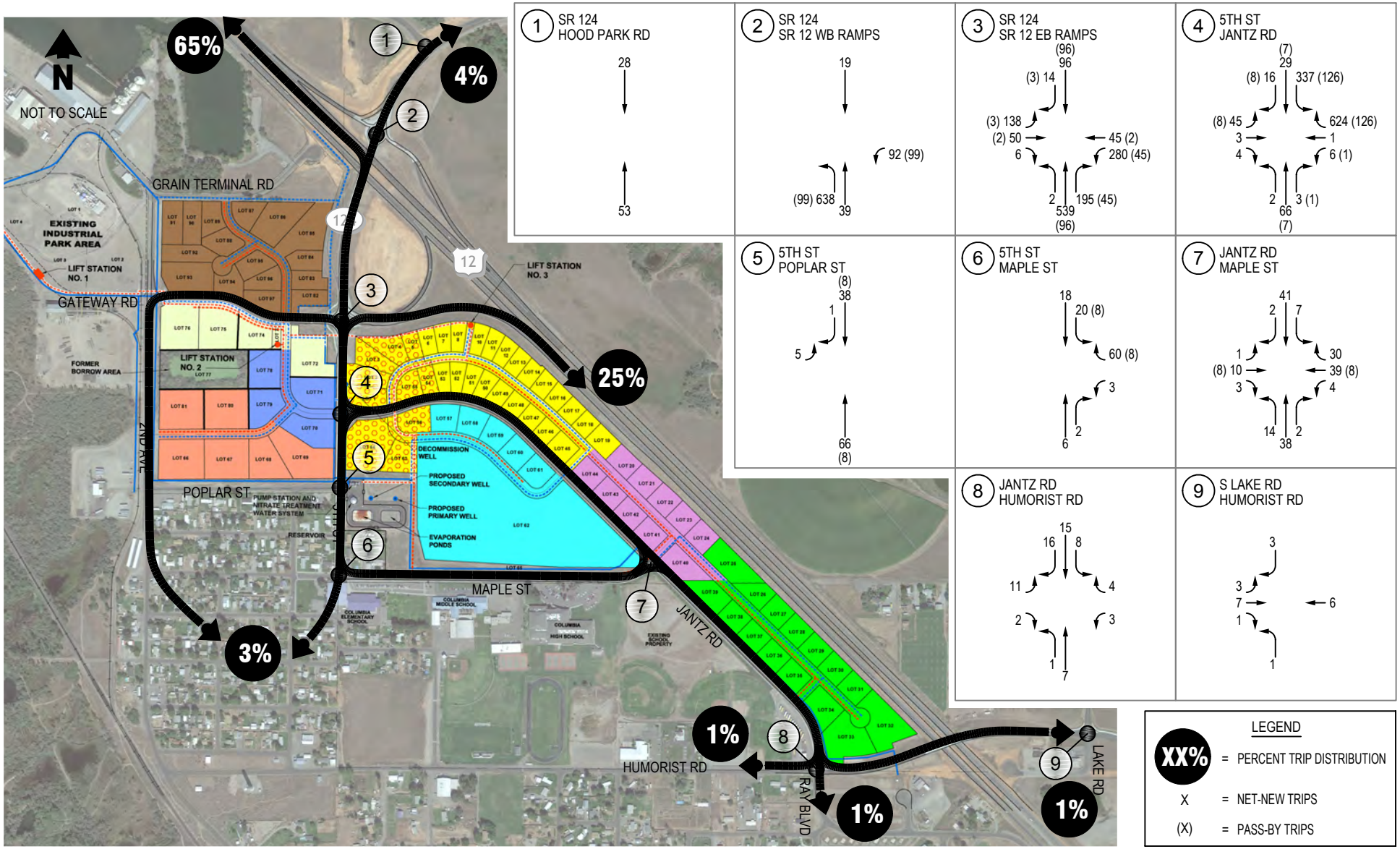

PM Project Trip Distribution and Assignment

Burbank Business Park

Q:\Projects\13\13037.00 - Burbank Business Park\Graphics\13037_graphic01 <E> robertm 04/11/13 11:55

transpoGROUP

FIGURE **4b**

Project Impacts

This section of the analysis documents project-generated impacts within the study area. First, peak hour traffic volumes are estimated for the project and then distributed and assigned to adjacent roadways and intersections within the study area. Next, project traffic is added to the 2033 forecast baseline volumes. The impact analysis then describes the impact to traffic volumes, traffic operations, and traffic safety.

Trip Generation

Project trip generation was estimated based on equations published by the Institute of Transportation Engineers (ITE) in *Trip Generation* (9th Edition, 2012). The trip generation estimate for the development is based on a mix of uses anticipated at full buildout. The trip generation was based on the site as a whole, although development will take place at a parcel level. The land uses include Shopping Center (LU 820), Business Park (LU 770), and Industrial Park (LU 130). Based on the mix of land uses both pass-by trips and internal trips were accounted for.

Pass-by trips represent trips that are currently passing by the site. With the addition of the proposed development, these trips would stop at the site before continuing on their way. As such, the trips do not represent new trips to the adjacent roadway system. Due to the limited traffic on the streets adjacent to the site, the majority of pass-by trips were *diverted* from SR 12. The assignment of traffic from SR 12 and the local streets adjacent to the site were based on the relative volumes on each of the adjacent roadways. Internal trips are those that occur between uses internal to the site. The *ITE Trip Generation Handbook* contains information related to potential internalization between uses. Based on the mix of land uses, ITE procedures suggest an internal capture rate of approximately five percent during the weekday PM peak hour. A five percent internal capture was also assumed for the weekday AM peak hour.

Table 4 shows the resulting weekday AM and PM peak hour vehicle trip generation for the business park.

Table 4. Trip Generation Summary – Weekday AM and PM Peak Hour

Land Use	Size	Trip Rate[1]	Internal Trips	Pass-by Trips	New Peak Hour Trips		
					Total	In	Out
Weekday AM Peak Hour							
Industrial (LU 130)	53.2 Acres	EQN	-20	0	352	299	53
Shopping Center (LU 820)	186,200 sf	EQN	-10	-72	146	99	47
Business Park (LU 770)	434,400 sf	EQN	-32	0	559	486	73
Total			**-62**	**-72**	**1,057**	**884**	**173**
Weekday PM Peak Hour							
Industrial (LU 130)	53.2 Acres	EQN	-20	0	352	68	284
Shopping Center (LU 820)	186,200 sf	EQN	-46	-296	567	264	303
Business Park (LU 770)	434,400 sf	EQN	-28	0	525	131	394
Total			**-94**	**-296**	**1,444**	**463**	**981**

1. Trips rates from ITE Trip Generation Manual, 9th Edition.

As shown in Table 4, the development is anticipated to generate 1,057 net new weekday AM peak hour trips and 1,444 net new weekday PM peak hour trips.

95th percentile queues of 80 feet during the weekday AM peak hour and 580 feet during the weekday PM peak hour. PM peak hour queues would likely extend to the intersection of 5th Street / Jantz Road.

Mitigation

This section documents the recommended traffic mitigation to address impacts identified. The locations where traffic operations are forecasted to be impacted by the project include the SR 124 / SR 12 EB Ramp, the 5th Street / Jantz Road intersection, and the local roadway network. Specific details are discussed below and a master improvement figure illustrating the proposed mitigation is shown in Figure 6.

SR 124 / SR 12 EB Ramp

Based on the LOS and anticipated queue impacts at the intersection of SR 124 / SR 12 EB Ramp a review of potential mitigation was completed to improve LOS and reduce queues on the eastbound ramp during the weekday AM and PM peak hour. The following mitigation, would reduce queues to approximately 600 feet or less on the ramp and approximately 100 feet or less at the northbound approach during the peak periods:

- Re-configure roundabout to have two circulating lanes
- Add entry and exit lane at the northbound approach
- Re-configure off-ramp to allow for both lanes to circulate through the roundabout

These improvements would improve LOS at the intersection to LOS C during the weekday AM peak hour and LOS B during the weekday PM peak hour and reduce all forecasted queuing to a level that can be accommodated within the future capacity of the system.

5th Street / Jantz Road

As shown in Table 5, at full buildout high volumes of traffic, primarily at the southbound left-turn and westbound right-turn movements, would degrade LOS at 5th Street / Jantz Road to LOS F during the weekday AM and PM peak hour. Improvements at this intersection would be necessary to accommodate traffic volumes, although the timing and type of improvements are dependent on the type and location of development throughout the site. Based on the development assumptions the following improvements could be considered:

- Installation of a roundabout – This assumes two entry and exit lanes at the southbound approach to match improvements to the SR 124 / SR 12 EB Ramps discussed above. All other approaches are assumed to have one entry and exit lane. The resulting LOS during the weekday AM and PM peak hour is LOS A.
- Installation of a traffic signal – This assumes a southbound left-turn and through-right lane, westbound right-turn and through-left lane, and single lane approaches at the northbound and eastbound legs. With a signal installed at this location, the intersection LOS would improve to LOS A. Although a traffic signal results in an adequate level of service, the challenges associated with lane transitions between this intersection and the roundabout to the north, make this a more challenging and ROW intensive option.

Local Roadway Network

With the increased traffic demands associated with the proposed development the existing two-lane roadway network will need to be modified in some locations to accommodate the increase in future traffic volumes and provide access to the development parcels. Below is a list of improvements that have been identified to accommodate the development:

- Widen 5th Street to four lanes between Jantz Road and EB Ramps to accommodate intersection improvements at 5th Street / Jantz Road and SR 124 / SR 12 EB Ramps.

- Along Jantz Road east and west of 5th Street provide auxiliary turn lanes at internal roadways into the site. Also provide auxiliary turn lanes at the intersection of Maple Street / Jantz Road.
- All internal roadways within the development should provide three lanes to accommodate vehicle access to/from the development parcels.

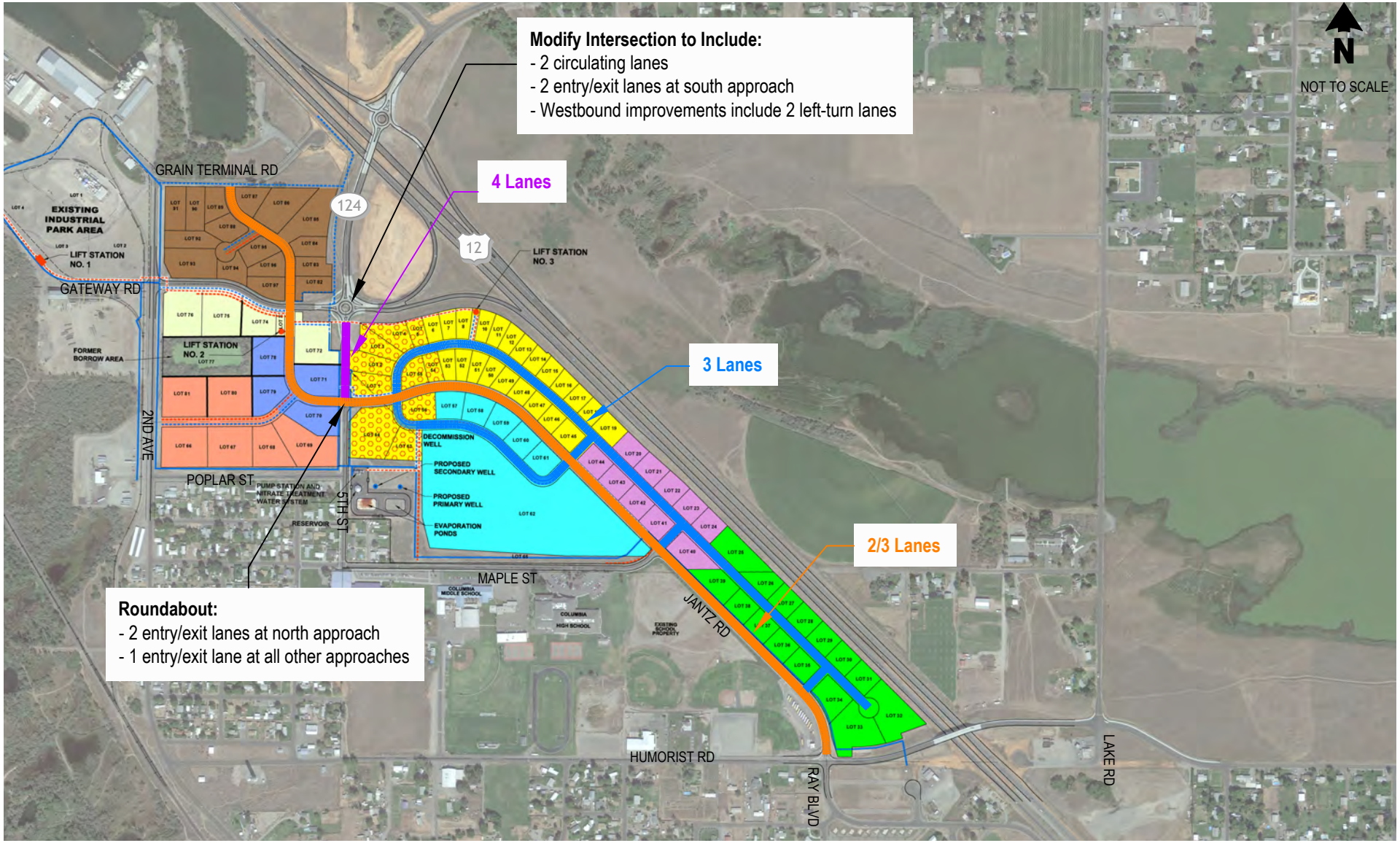

2033 Master Improvements

Burbank Business Park

Q:\Projects\13\13037.00 - Burbank Business Park\Graphics\13037_graphic01 <G> robertm 04/11/13 11:55

transpoGROUP

FIGURE
6

Appendix C

Trip Generation Calculations and Trip Distribution

Huntsman's Estates

Graph Look Up

Query Filter

DATA SOURCE:
Trip Generation Manual, 11th Ed

SEARCH BY LAND USE CODE:
210

LAND USE GROUP:
(200-299) Residential

LAND USE :
210 - Single-Family Detached Housing

LAND USE SUBCATEGORY:
All Sites

SETTING/LOCATION:
General Urban/Suburban

INDEPENDENT VARIABLE (IV):
Dwelling Units

TIME PERIOD:
Weekday

TRIP TYPE:
Vehicle

ENTER IV VALUE TO CALCULATE TRIPS:
484 Calculate

Data Plot and Equation

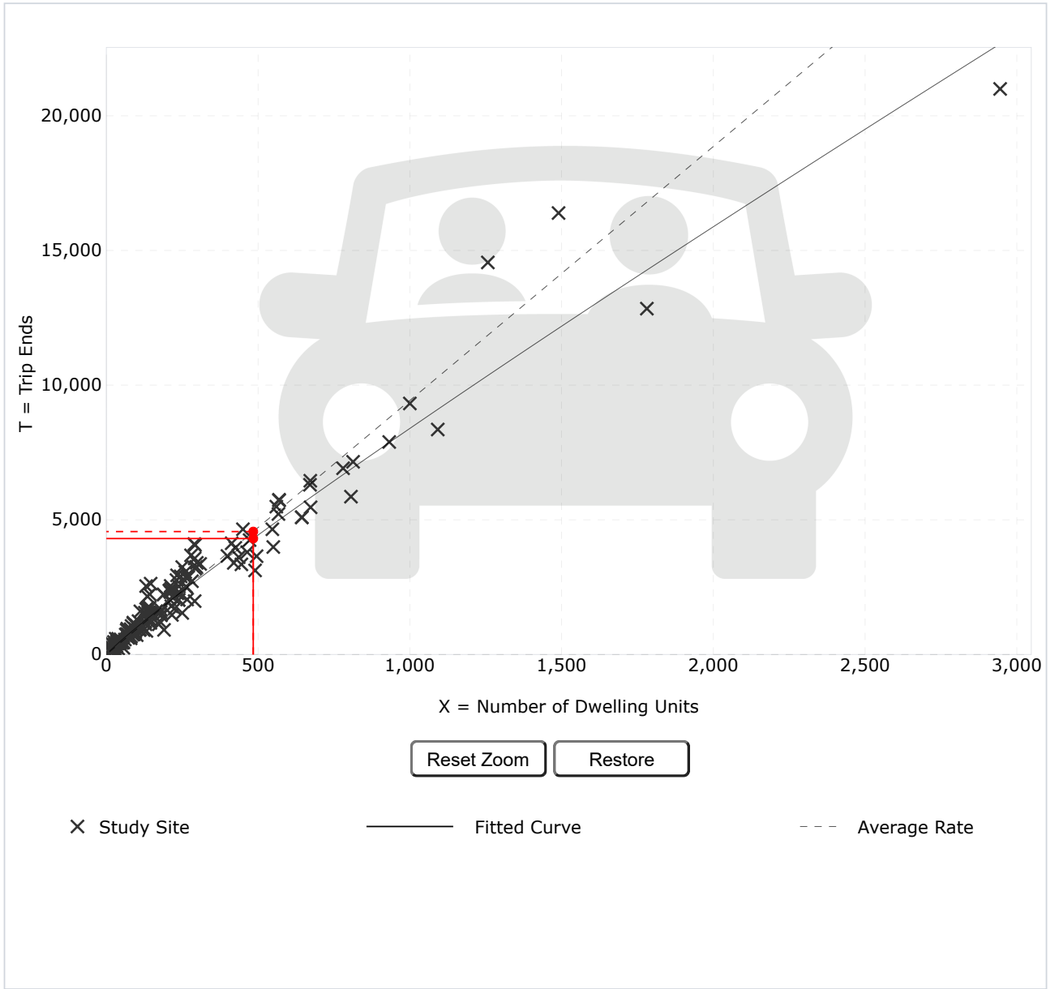

Use the mouse wheel to Zoom Out or Zoom In.
Hover the mouse pointer on data points to view X and T values.

DATA STATISTICS

Land Use:
Single-Family Detached Housing (210) Click for Description and Data Plots

Independent Variable:
Dwelling Units

Time Period:
Weekday

Setting/Location:
General Urban/Suburban

Trip Type:
Vehicle

Number of Studies:
174

Avg. Num. of Dwelling Units:
246

Average Rate:
9.43

Range of Rates:
4.45 - 22.61

Standard Deviation:
2.13

Fitted Curve Equation:
$Ln(T) = 0.92\ Ln(X) + 2.68$

R^2:
0.95

Directional Distribution:
50% entering, 50% exiting

Calculated Trip Ends:
Average Rate: 4564 (Total), 2282 (Entry), 2282 (Exit)
Fitted Curve: 4305 (Total), 2152 (Entry), 2153 (Exit)

© COPYRIGHT 2022 | DEVELOPED IN COLLABORATION WITH TRANSOFT SOLUTIONS INC.

Huntsman's Estates

Graph Look Up

Query Filter

DATA SOURCE:
Trip Generation Manual, 11th Ed

SEARCH BY LAND USE CODE:
210

LAND USE GROUP:
(200-299) Residential

LAND USE :
210 - Single-Family Detached Housing

LAND USE SUBCATEGORY:
All Sites

SETTING/LOCATION:
General Urban/Suburban

INDEPENDENT VARIABLE (IV):
Dwelling Units

TIME PERIOD:
Weekday, Peak Hour of Adjacent Street Traffic

TRIP TYPE:
Vehicle

ENTER IV VALUE TO CALCULATE TRIPS:
484 Calculate

Data Plot and Equation

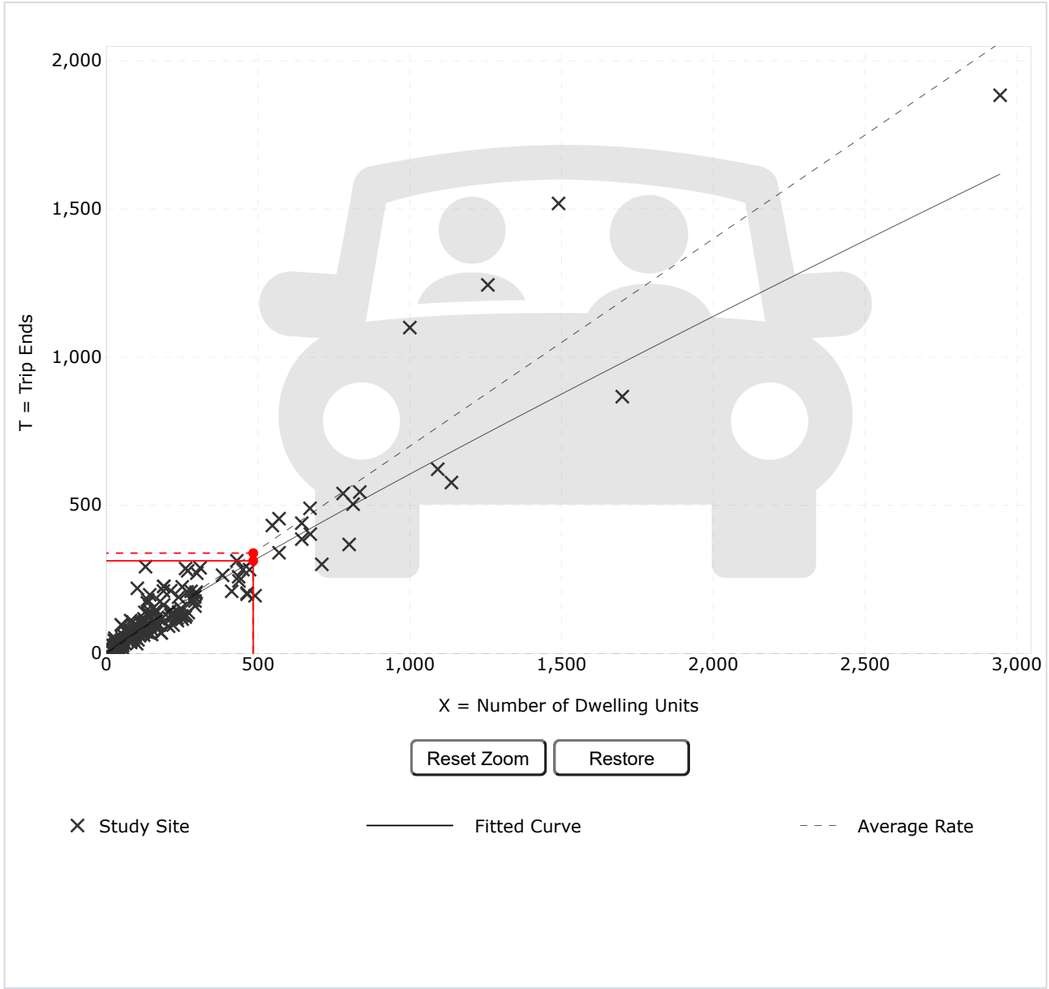

Use the mouse wheel to Zoom Out or Zoom In.
Hover the mouse pointer on data points to view X and T values.

DATA STATISTICS

Land Use:
Single-Family Detached Housing (210) Click for Description and Data Plots

Independent Variable:
Dwelling Units

Time Period:
Weekday
Peak Hour of Adjacent Street Traffic
One Hour Between 7 and 9 a.m.

Setting/Location:
General Urban/Suburban

Trip Type:
Vehicle

Number of Studies:
192

Avg. Num. of Dwelling Units:
226

Average Rate:
0.70

Range of Rates:
0.27 - 2.27

Standard Deviation:
0.24

Fitted Curve Equation:
$Ln(T) = 0.91 Ln(X) + 0.12$

R^2:
0.90

Directional Distribution:
26% entering, 74% exiting

Calculated Trip Ends:
Average Rate: 339 (Total), 88 (Entry), 251 (Exit)
Fitted Curve: 313 (Total), 81 (Entry), 232 (Exit)

© COPYRIGHT 2022 | DEVELOPED IN COLLABORATION WITH TRANSOFT SOLUTIONS INC.

Huntsman's Estates

Graph Look Up

Query Filter

DATA SOURCE:
Trip Generation Manual, 11th Ed

SEARCH BY LAND USE CODE:
210

LAND USE GROUP:
(200-299) Residential

LAND USE :
210 - Single-Family Detached Housing

LAND USE SUBCATEGORY:
All Sites

SETTING/LOCATION:
General Urban/Suburban

INDEPENDENT VARIABLE (IV):
Dwelling Units

TIME PERIOD:
Weekday, Peak Hour of Adjacent Street Traffic

TRIP TYPE:
Vehicle

ENTER IV VALUE TO CALCULATE TRIPS:
484 Calculate

Data Plot and Equation

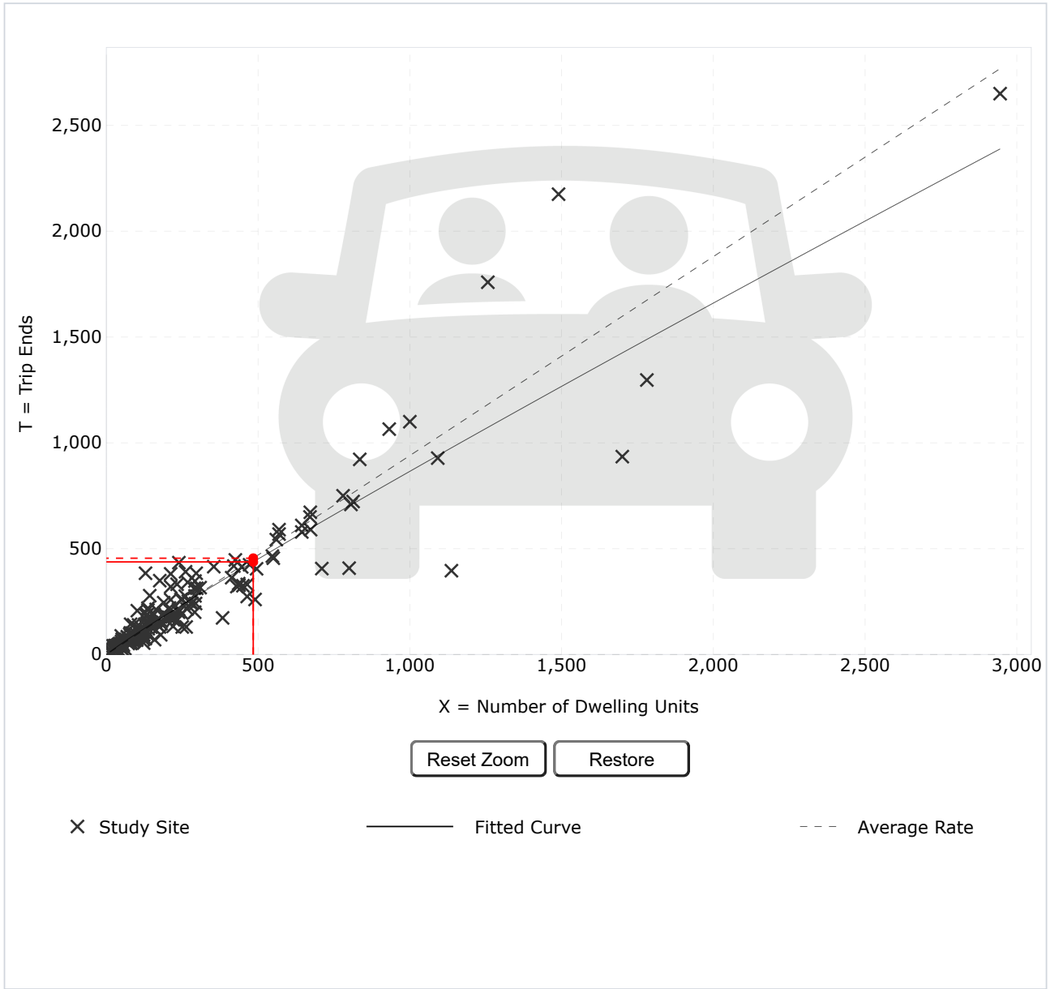

Use the mouse wheel to Zoom Out or Zoom In.
Hover the mouse pointer on data points to view X and T values.

DATA STATISTICS

Land Use:
Single-Family Detached Housing (210) Click for Description and Data Plots

Independent Variable:
Dwelling Units

Time Period:
Weekday
Peak Hour of Adjacent Street Traffic
One Hour Between 4 and 6 p.m.

Setting/Location:
General Urban/Suburban

Trip Type:
Vehicle

Number of Studies:
208

Avg. Num. of Dwelling Units:
248

Average Rate:
0.94

Range of Rates:
0.35 - 2.98

Standard Deviation:
0.31

Fitted Curve Equation:
$Ln(T) = 0.94 Ln(X) + 0.27$

R^2:
0.92

Directional Distribution:
63% entering, 37% exiting

Calculated Trip Ends:
Average Rate: 455 (Total), 287 (Entry), 168 (Exit)
Fitted Curve: 438 (Total), 276 (Entry), 162 (Exit)

© COPYRIGHT 2022 | DEVELOPED IN COLLABORATION WITH TRANSOFT SOLUTIONS INC.

Huntsman's Estates PUD

LOCATED IN THE SW ¼ OF SEC 7, T 8 N, R 31 E OF THE WILLAMETTE MERIDIAN

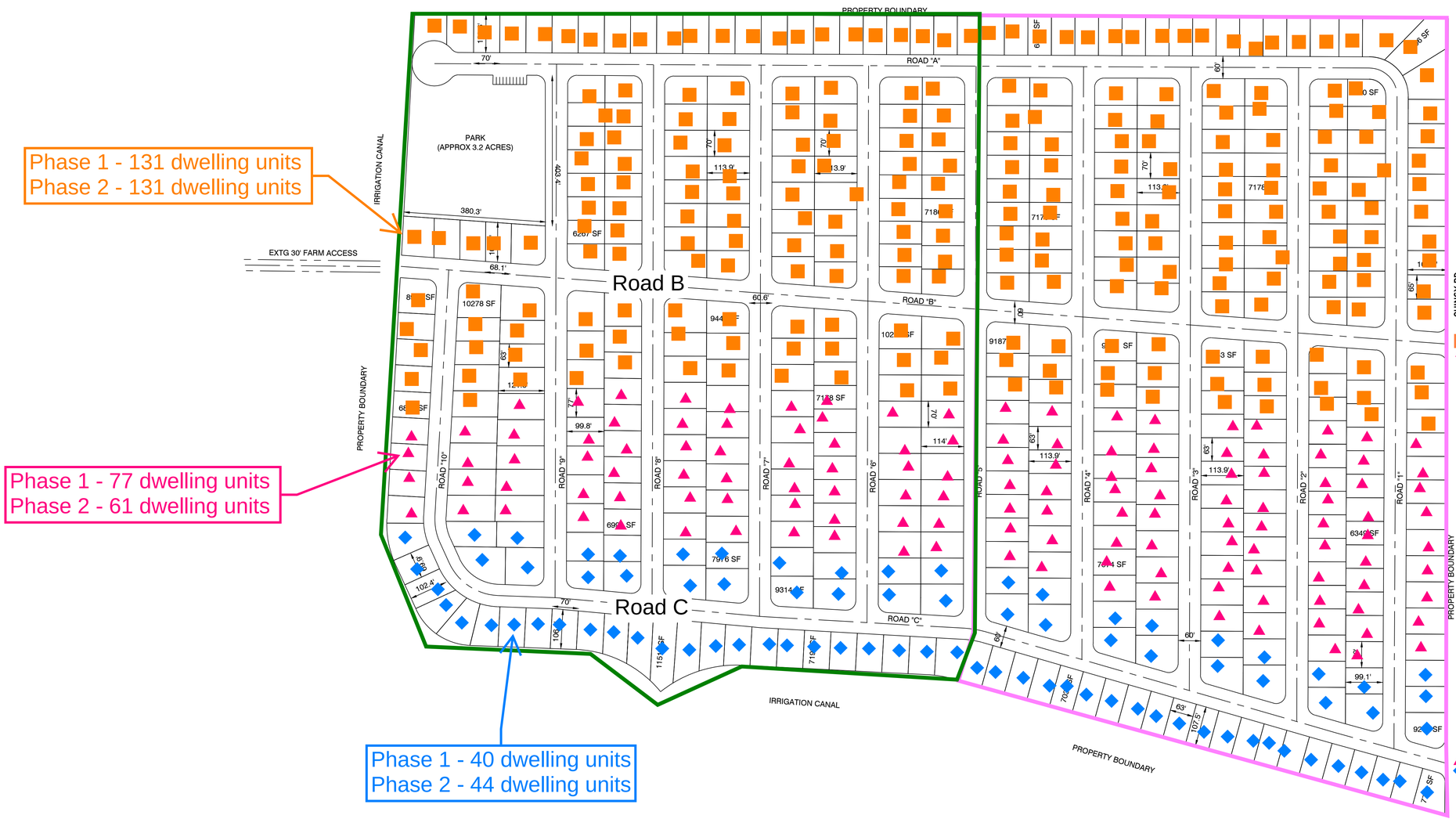

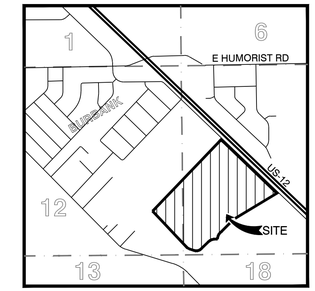

VICINITY MAP 1"=2,000'±

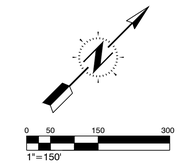

TAX ID: 310807510026
TOTAL LOTS: 484
TOTAL LAND AREA: 118 ACRES
TOTAL PARCEL AREA: 87.2 ACRES
AVERAGE PARCEL SIZE: 7848 SF
LARGEST PARCEL SIZE: 14296 SF (LOT 11)
SMALLEST PARCEL SIZE: 6267 SF (LOTS 456 & 457)

Know what's below. Call before you dig.

JOHN ERIC FETTEROLF STATE OF WASHINGTON 38322 REGISTERED PROFESSIONAL ENGINEER
1/11/22

JF ENGINEERING, PLLC
CIVIL ENGINEERING
PLANNING
PROJECT MANAGEMENT
7500 W. Clearwater Ave. STE A Kennewick, WA 99336
(509) 551-8174 PHN www.JFEngineering.pro

Concept Layout for:
Huntsman's Estates PUD
A project in Walla Walla County

Drawn by: CAW
Checked by: JEF

JF Eng. Job # 0161.00

Scale H: 1"=150'
Scale V: N/A

Date: JAN 11, 2022

1 OF 1

2025 Baseline - PM Total Volumes (4-6pm)

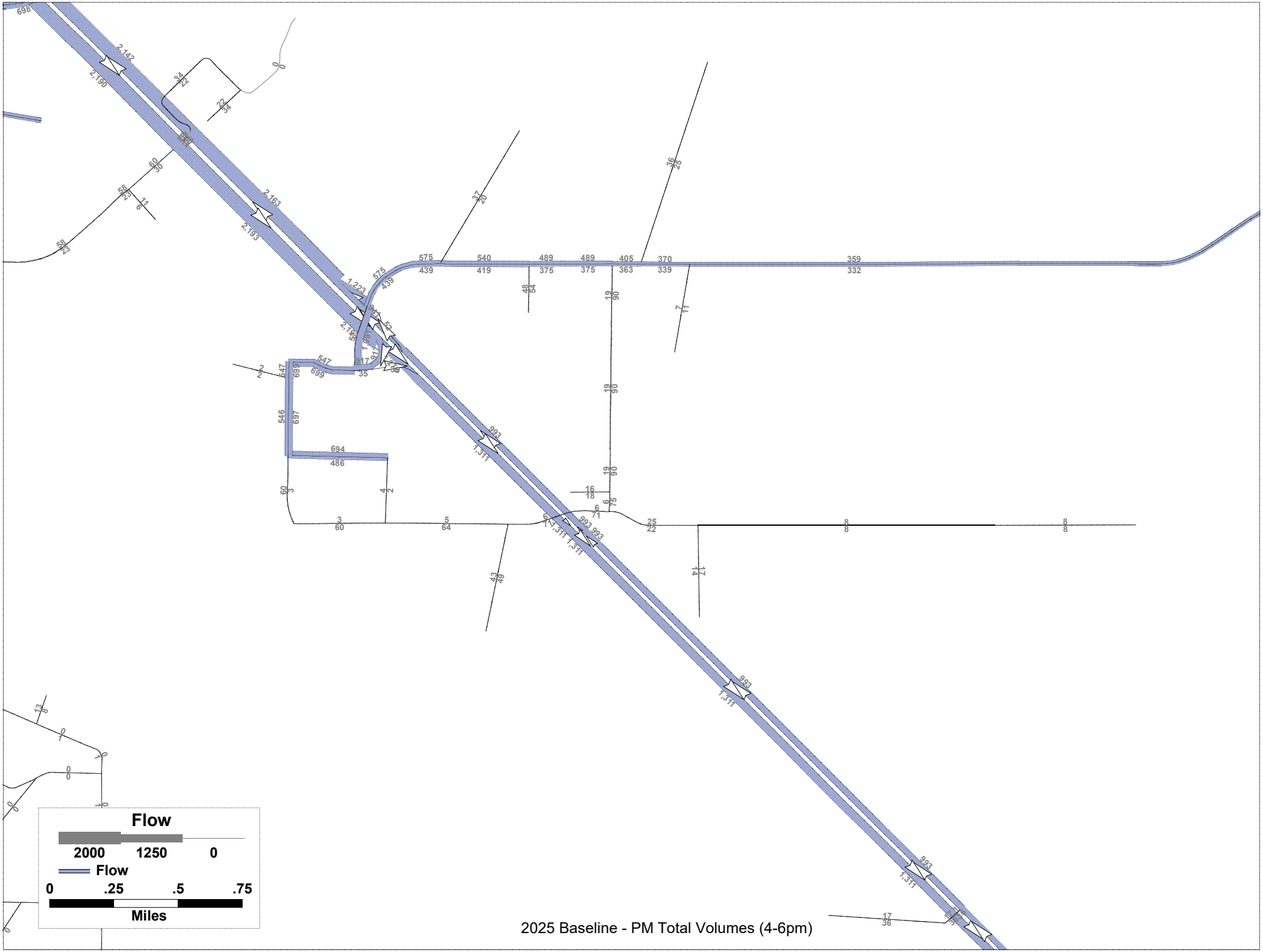

2025 Baseline - PM Total Volumes (4-6pm)

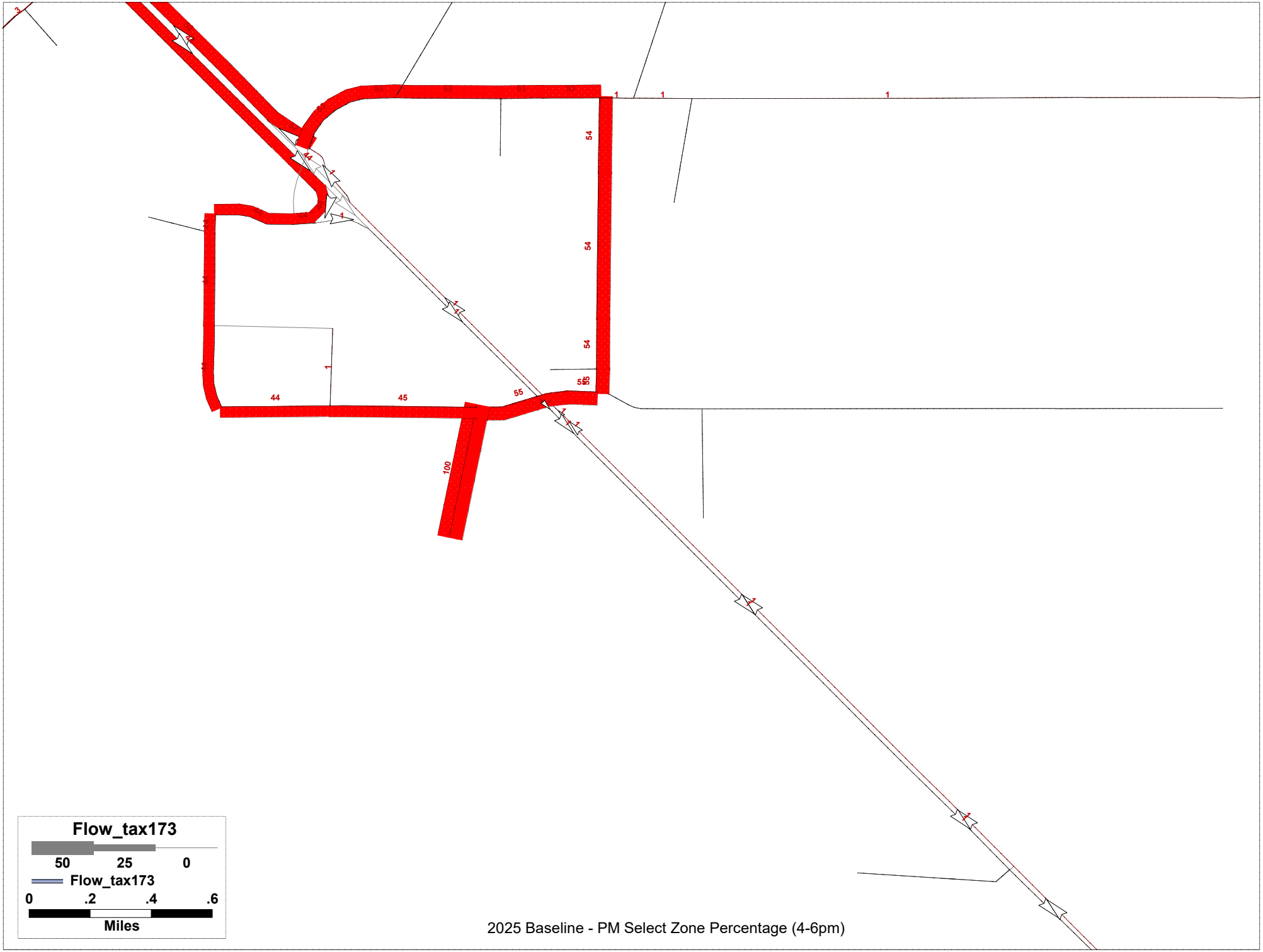

2025 Baseline - PM Select Zone Percentage (4-6pm)

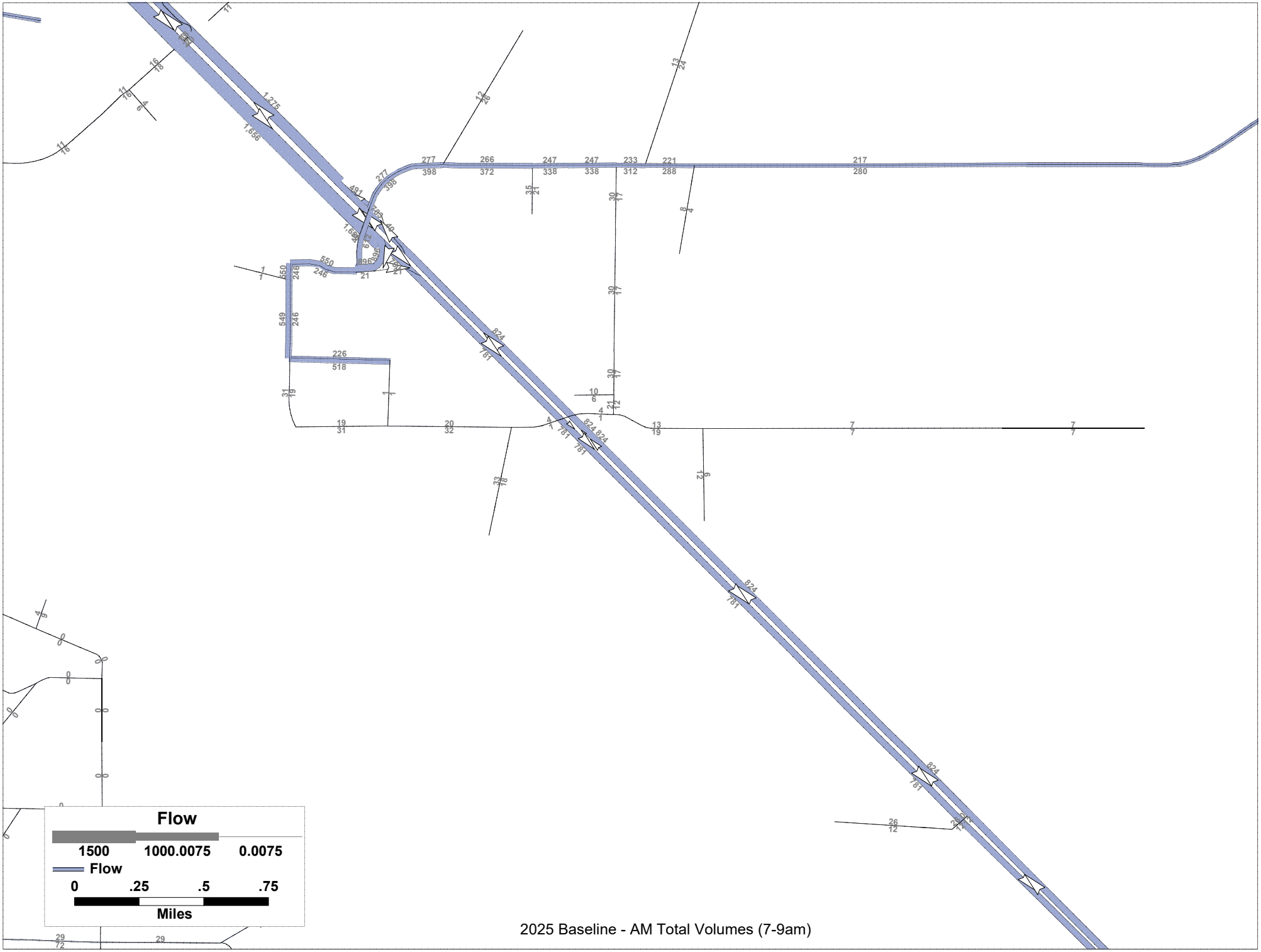

2025 Baseline - AM Total Volumes (7-9am)

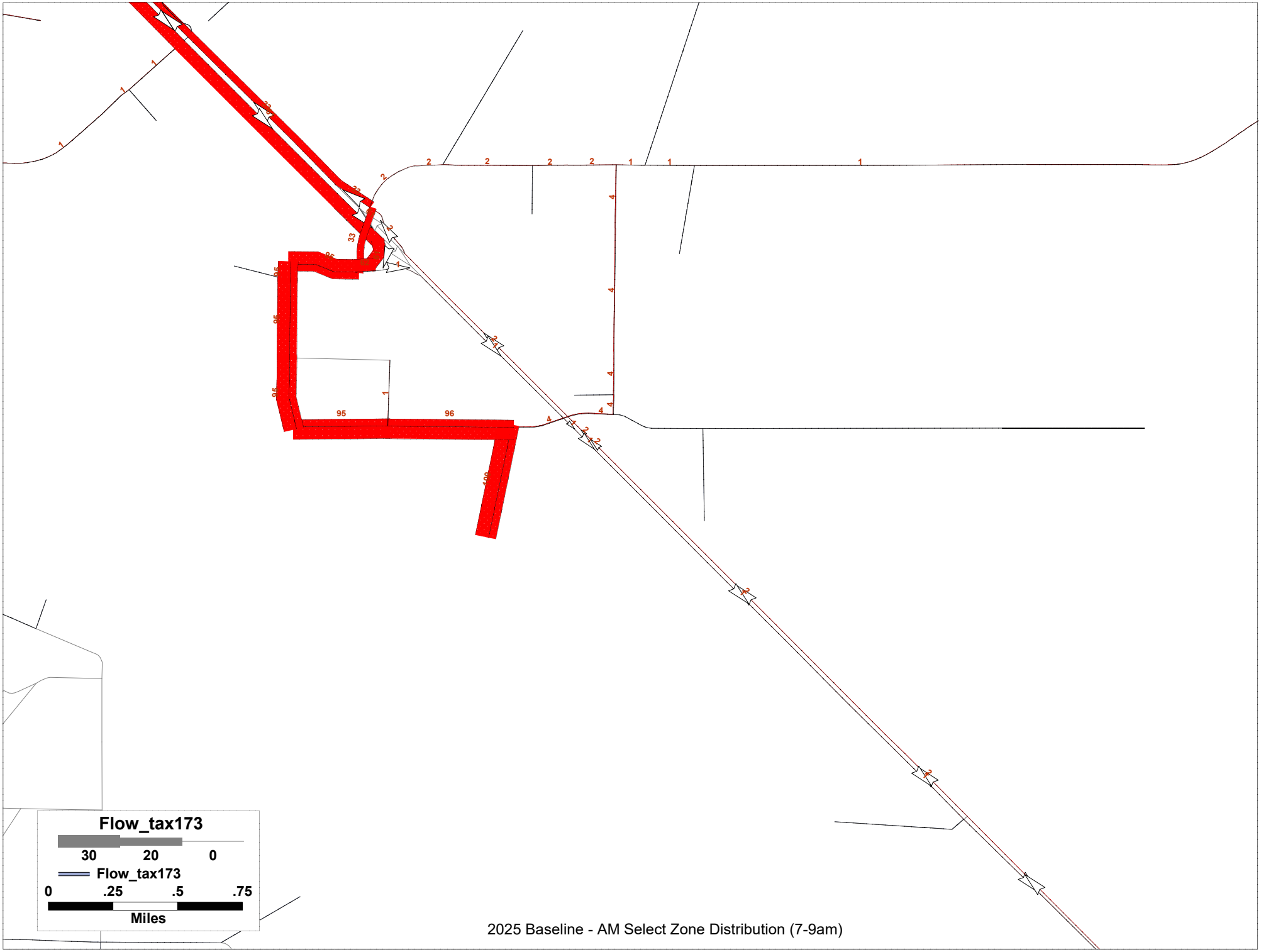

2025 Baseline - AM Select Zone Distribution (7-9am)

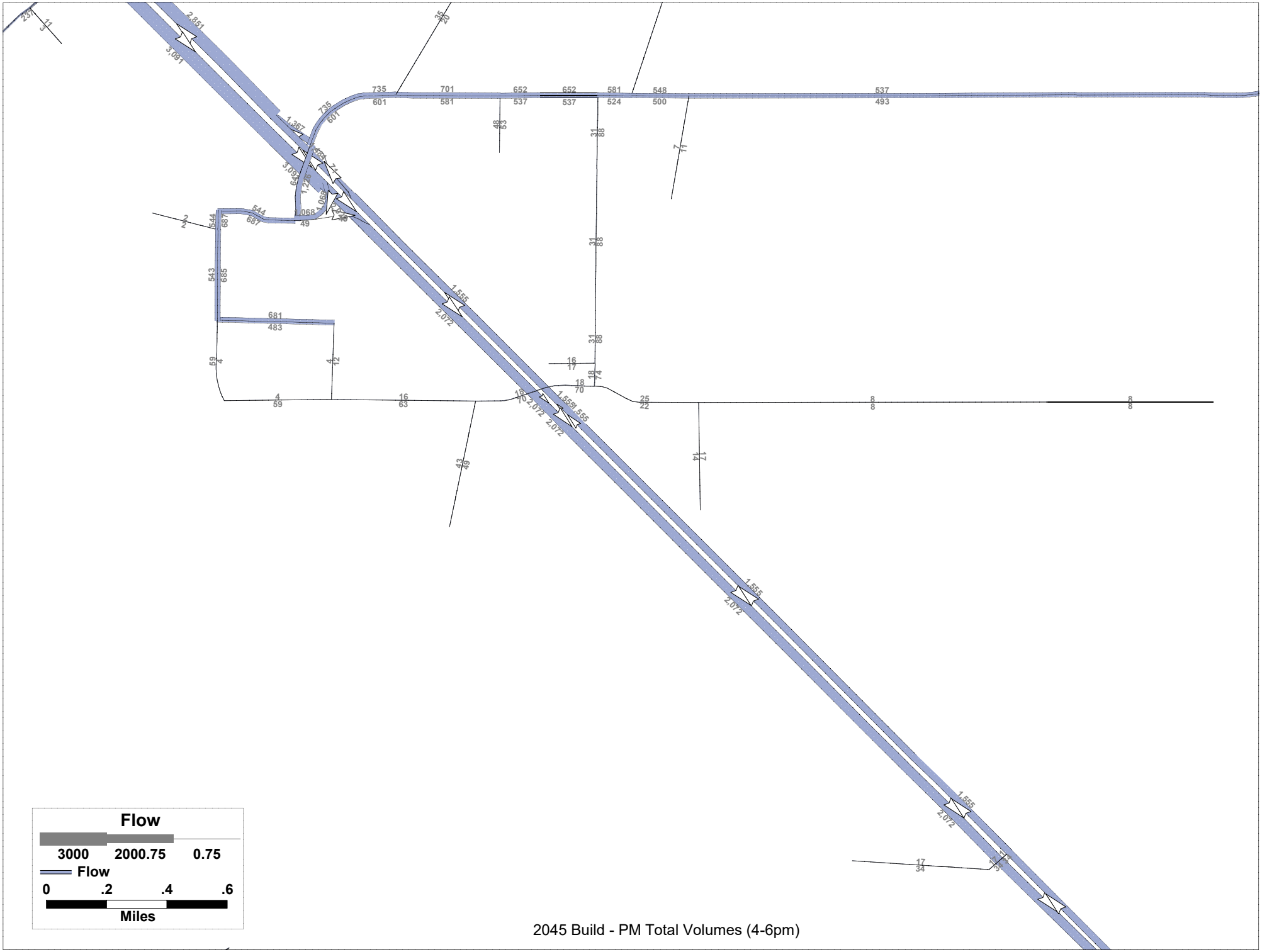

2045 Build - PM Total Volumes (4-6pm)

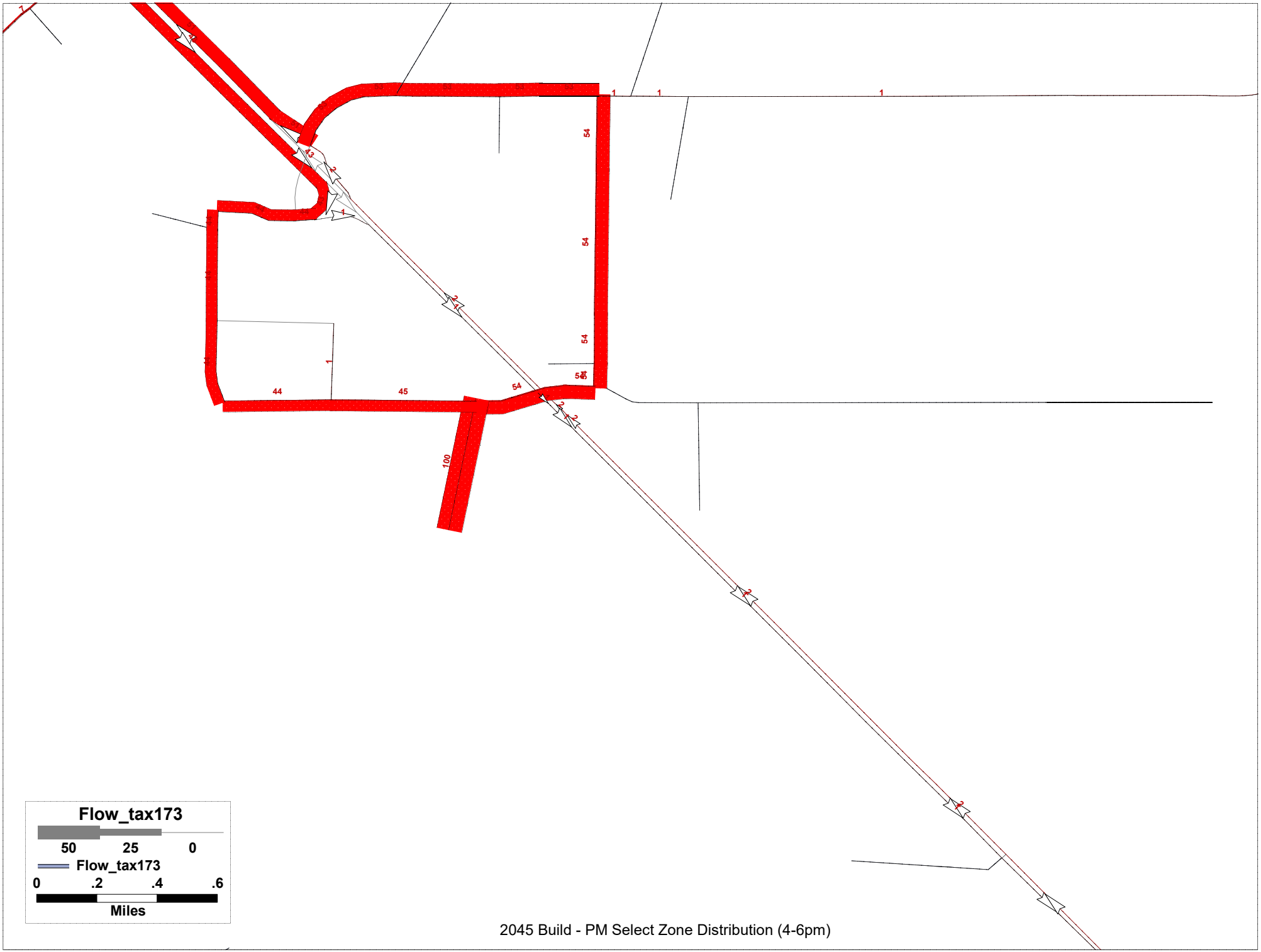

2045 Build - PM Select Zone Distribution (4-6pm)

2045 Build - AM Total Volumes (7-9pm)

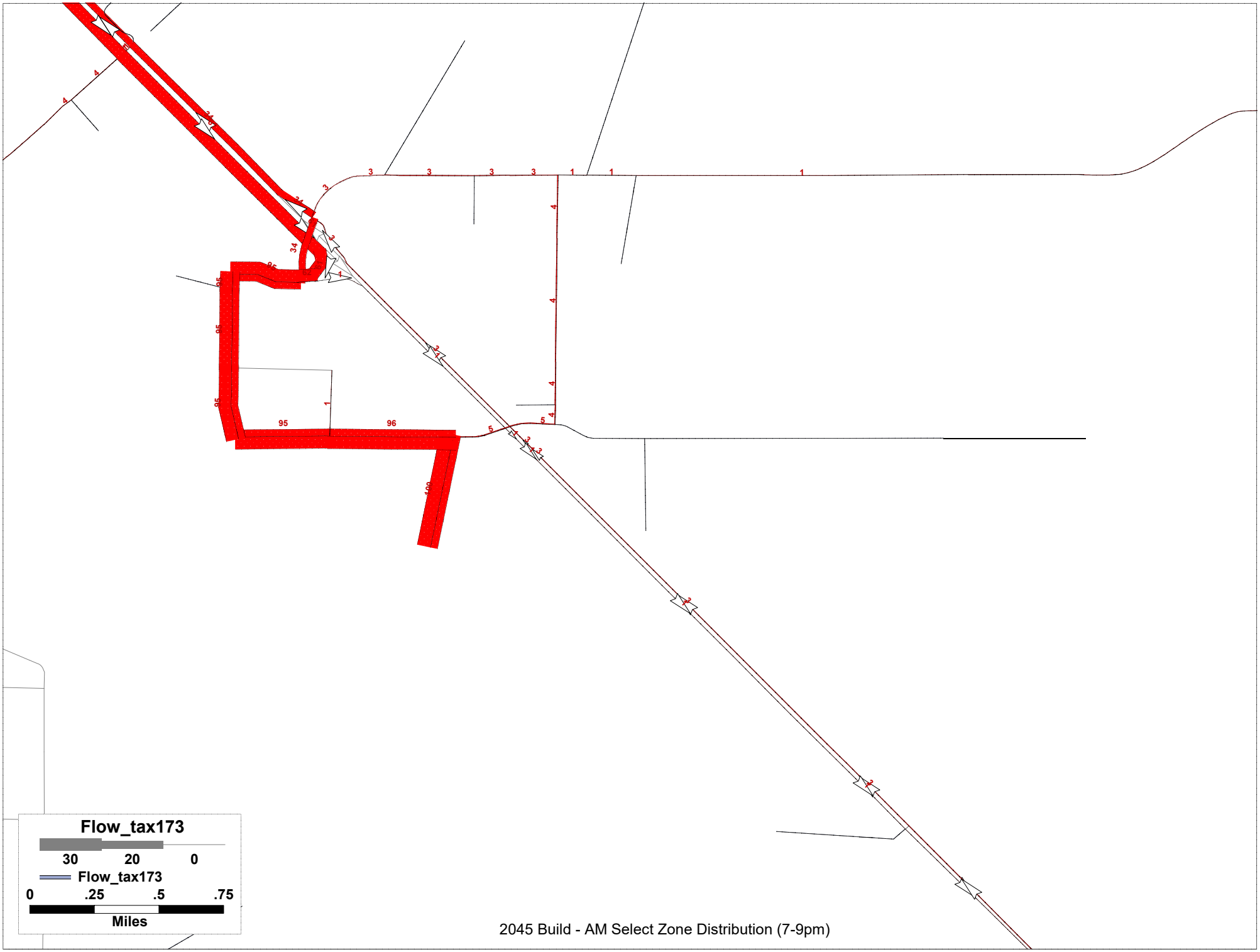

2045 Build - AM Select Zone Distribution (7-9pm)

Farmstead

ITETripGen Web-based App

Help | Bhauvesh Jaya | Sign out

Graph Look Up

ITETripGen Web-based App

- Graph Look Up
- How to Use *ITETripGen*
- TGM Desk Reference
- TGM Appendices
- Support Documents
- Add Users
- Comments

Query | Filter

DATA SOURCE: Trip Generation Manual, 11th Ed

SEARCH BY LAND USE CODE: 210

LAND USE GROUP: (200-299) Residential

LAND USE : 210 - Single-Family Detached Housing

LAND USE SUBCATEGORY: All Sites

SETTING/LOCATION: General Urban/Suburban

INDEPENDENT VARIABLE (IV): Dwelling Units

TIME PERIOD: Weekday

TRIP TYPE: Vehicle

ENTER IV VALUE TO CALCULATE TRIPS: 443 Calculate

Data Plot and Equation

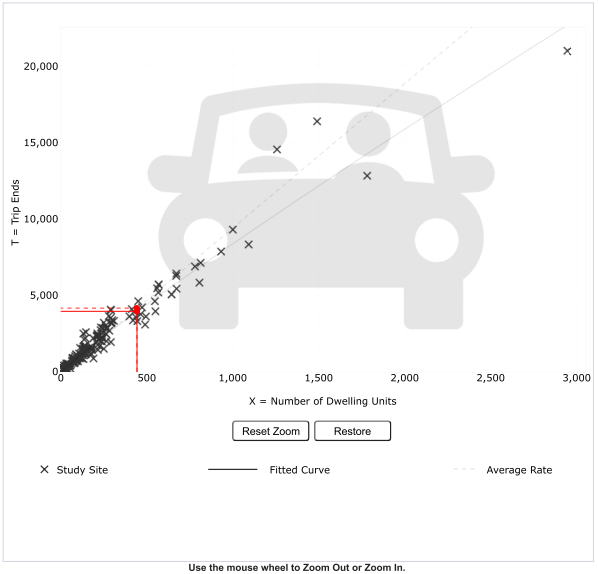

Use the mouse wheel to Zoom Out or Zoom In.
Hover the mouse pointer on data points to view X and T values.

DATA STATISTICS

Land Use: Single-Family Detached Housing (210) Click for Description and Data Plots

Independent Variable: Dwelling Units

Time Period: Weekday

Setting/Location: General Urban/Suburban

Trip Type: Vehicle

Number of Studies: 174

Avg. Num. of Dwelling Units: 246

Average Rate: 9.43

Range of Rates: 4.45 - 22.61

Standard Deviation: 2.13

Fitted Curve Equation: Ln(T) = 0.92 Ln(X) + 2.68

R^2: 0.95

Directional Distribution: 50% entering, 50% exiting

Calculated Trip Ends: Average Rate: 4177 (Total), 2088 (Entry), 2089 (Exit)
Fitted Curve: 3968 (Total), 1984 (Entry), 1984 (Exit)

- Add-ons to do more
- Try OTISS Pro

© COPYRIGHT 2022 | DEVELOPED IN COLLABORATION WITH TRANSOFT SOLUTIONS INC.

Farmstead

ITETripGen Web-based App

Help | Bhauvesh Jaya | Sign out

Graph Look Up

ITETripGen Web-based App

- Graph Look Up
- How to Use *ITETripGen*
- TGM Desk Reference
- TGM Appendices
- Support Documents
- Add Users
- Comments

Query | Filter

DATA SOURCE: Trip Generation Manual, 11th Ed

SEARCH BY LAND USE CODE: 210

LAND USE GROUP: (200-299) Residential

LAND USE : 210 - Single-Family Detached Housing

LAND USE SUBCATEGORY: All Sites

SETTING/LOCATION: General Urban/Suburban

INDEPENDENT VARIABLE (IV): Dwelling Units

TIME PERIOD: Weekday, Peak Hour of Adjacent Street Traffic

TRIP TYPE: Vehicle

ENTER IV VALUE TO CALCULATE TRIPS: 443 Calculate

Data Plot and Equation

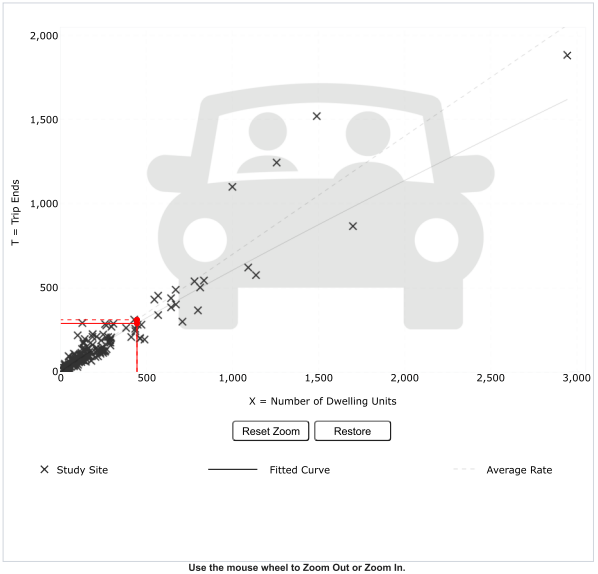

Use the mouse wheel to Zoom Out or Zoom In.
Hover the mouse pointer on data points to view X and T values.

DATA STATISTICS

Land Use:
Single-Family Detached Housing (210) Click for Description and Data Plots

Independent Variable:
Dwelling Units

Time Period:
Weekday
Peak Hour of Adjacent Street Traffic
One Hour Between 7 and 9 a.m.

Setting/Location:
General Urban/Suburban

Trip Type:
Vehicle

Number of Studies:
192

Avg. Num. of Dwelling Units:
226

Average Rate:
0.70

Range of Rates:
0.27 - 2.27

Standard Deviation:
0.24

Fitted Curve Equation:
Ln(T) = 0.91 Ln(X) + 0.12

R^2:
0.90

Directional Distribution:
26% entering, 74% exiting

Calculated Trip Ends:
Average Rate: 310 (Total), 81 (Entry), 229 (Exit)
Fitted Curve: 289 (Total), 75 (Entry), 214 (Exit)

Add-ons to do more

Try OTISS Pro

© COPYRIGHT 2022 | DEVELOPED IN COLLABORATION WITH TRANSOFT SOLUTIONS INC.

Farmstead

ITETripGen Web-based App

Help | Bhauvesh Jaya | Sign out

Graph Look Up

ITETripGen Web-based App

- Graph Look Up
- How to Use *ITETripGen*
- TGM Desk Reference
- TGM Appendices
- Support Documents
- Add Users
- Comments

Query | Filter

DATA SOURCE: Trip Generation Manual, 11th Ed

SEARCH BY LAND USE CODE: 210

LAND USE GROUP: (200-299) Residential

LAND USE : 210 - Single-Family Detached Housing

LAND USE SUBCATEGORY: All Sites

SETTING/LOCATION: General Urban/Suburban

INDEPENDENT VARIABLE (IV): Dwelling Units

TIME PERIOD: Weekday, Peak Hour of Adjacent Street Traffic

TRIP TYPE: Vehicle

ENTER IV VALUE TO CALCULATE TRIPS: 443 Calculate

Data Plot and Equation

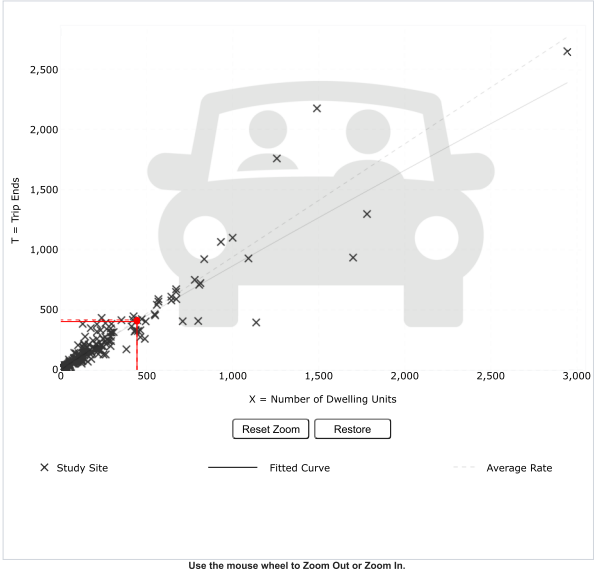

Use the mouse wheel to Zoom Out or Zoom In.
Hover the mouse pointer on data points to view X and T values.

DATA STATISTICS

Land Use:
Single-Family Detached Housing (210) Click for Description and Data Plots

Independent Variable:
Dwelling Units

Time Period:
Weekday
Peak Hour of Adjacent Street Traffic
One Hour Between 4 and 6 p.m.

Setting/Location:
General Urban/Suburban

Trip Type:
Vehicle

Number of Studies:
208

Avg. Num. of Dwelling Units:
248

Average Rate:
0.94

Range of Rates:
0.35 - 2.98

Standard Deviation:
0.31

Fitted Curve Equation:
Ln(T) = 0.94 Ln(X) + 0.27

R^2:
0.92

Directional Distribution:
63% entering, 37% exiting

Calculated Trip Ends:
Average Rate: 416 (Total), 262 (Entry), 154 (Exit)
Fitted Curve: 403 (Total), 254 (Entry), 149 (Exit)

- Add-ons to do more
- Try OTISS Pro

© COPYRIGHT 2022 | DEVELOPED IN COLLABORATION WITH TRANSOFT SOLUTIONS INC.

Farmstead

PRELIMINARY PLAT FOR A SINGLE-FAMILY RESIDENTIAL SUBDIVISION
LOCATED IN THE SE ¼ OF SEC 12, T 8 N, R 30 E OF THE WILLAMETTE MERIDIAN

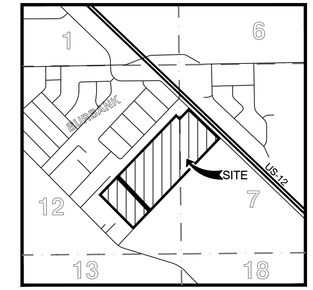

VICINITY MAP 1"=2,000'±

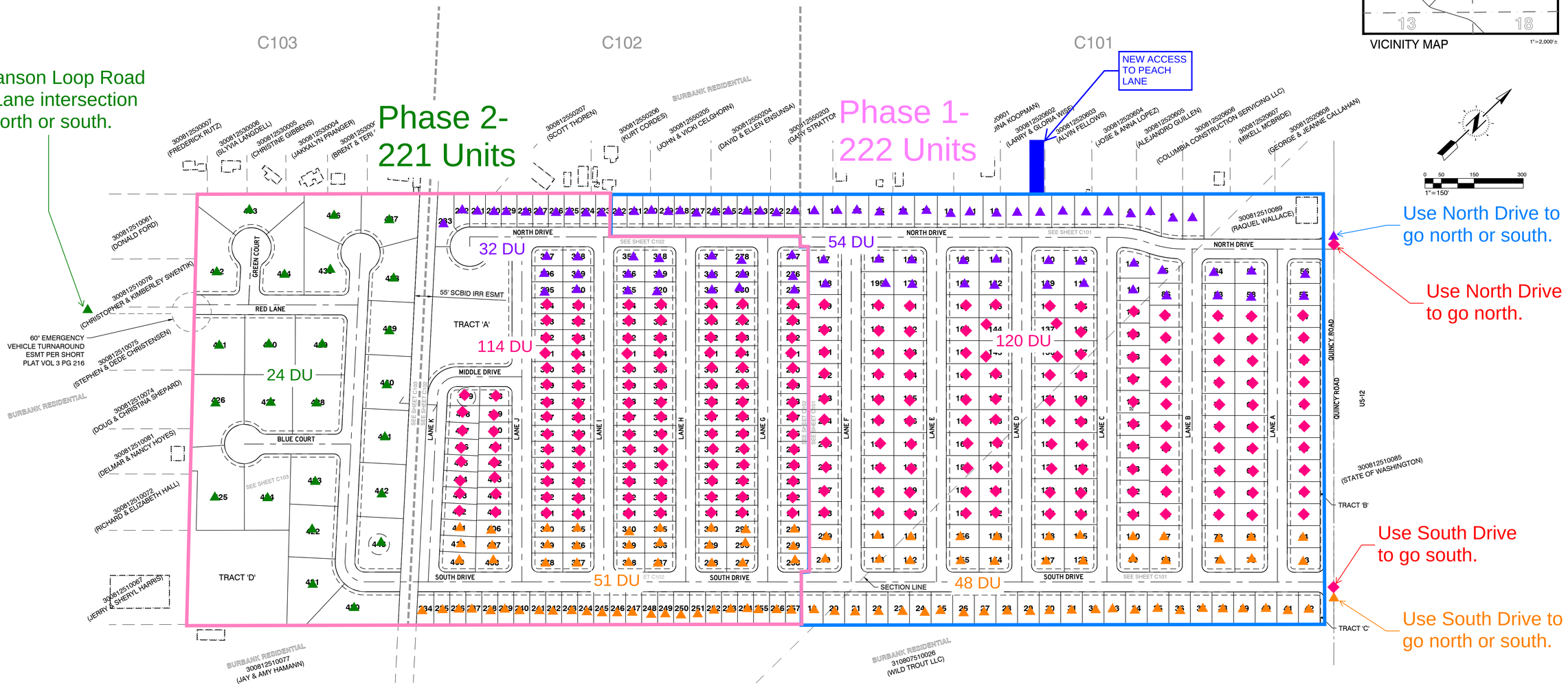

Project Information

Property Owner:
Silverrado Land LLC
1257 Hansen Loop
Burbank, WA 99323
(509)539-1725

Surveyor:
Worley Surveying Service, INC
121 S. Ely St.
Kennewick, WA 99336
(509)582-6716

Parcel tax ID: 300812510090, 300812510091, 300812510092

Land use designation: Residential Single Family

Current zoning: R-96 Suburban Residential

Parcel area: 4,476,661 SF / 102.77 Ac

Water Service Provider: Great Basin Water Company

Sewer Service Provider: Port of Walla Walla

Irrigation Service Provider: South Columbia Basin Irrigation District

Drainage will be contained on-site in localized subsurface infiltration facilities.

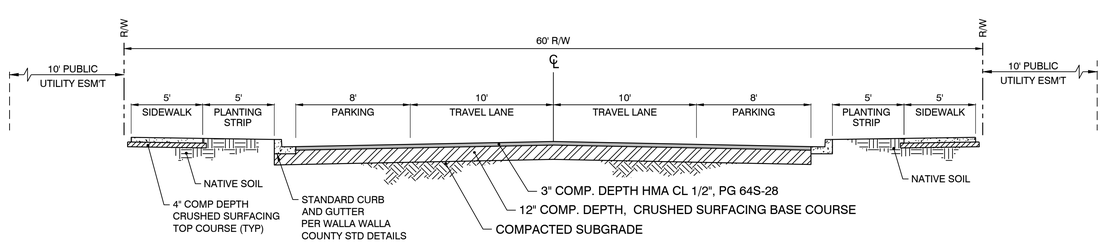

NOTES:
1. SIDEWALK SHALL BE INSTALLED WITH THE HOME UNLESS OTHERWISE IDENTIFIED ON THE PLAN. fc=3,000psi
2. SIDEWALKS PER WALLA WALLA COUNTY STANDARD DETAILS

TYPICAL ROAD SECTION
NTS

811 Know what's below. Call before you dig.

PRELIMINARY
JOHN ERIC FETTEROLF STATE OF WASHINGTON 38322 REGISTERED PROFESSIONAL ENGINEER
12/2/21

JF ENGINEERING, PLLC
CIVIL ENGINEERING
PLANNING
PROJECT MANAGEMENT
7500 W. Clearwater Ave. STE A Kennewick, WA 99336
(509) 551-8174 PHN www.JFEngineering.pro

Overall layout plan for:
Farmstead
A project in Walla Walla County, WA

Drawn by: DAK
Checked by: JEF

JF Eng. Job # 0075.00

Scale H: 1"=150'
Scale V: N/A

Date: Dec 2, 2021

C100

Appendix D

Level of Service Calculations

MOVEMENT SUMMARY

Site: 1 [1. SR 124 / US Highway 12 Westbound Ramp (2022-AM-Existing-Conditions) (Site Folder: 2022-AM-Existing-Conditions)]

SR 124 / US Highway 12 Westbound Ramp
Site Category: (None)
Roundabout

Vehicle Movement Performance

Mov ID	Turn	INPUT VOLUMES [Total veh/h	HV] %	DEMAND FLOWS [Total veh/h	HV] %	Deg. Satn v/c	Aver. Delay sec	Level of Service	95% BACK OF QUEUE [Veh. veh	Dist] ft	Prop. Que	Effective Stop Rate	Aver. No. Cycles	Aver. Speed mph
South: SR 124														
3u	U	1	2.0	1	2.0	0.278	11.0	LOS B	0.0	0.0	0.00	0.61	0.00	35.6
3	L2	234	9.0	282	9.0	0.278	9.1	LOS A	0.0	0.0	0.00	0.61	0.00	34.8
8	T1	173	8.0	208	8.0	0.278	4.8	LOS A	0.0	0.0	0.00	0.61	0.00	35.1
Approach		408	8.6	492	8.6	0.278	7.3	LOS A	0.0	0.0	0.00	0.61	0.00	34.9
East: US Highway 12 Westbound Ramp														
1	L2	11	9.0	13	9.0	0.029	11.1	LOS B	0.1	3.3	0.52	0.67	0.52	30.4
16	R2	6	17.0	7	17.0	0.029	7.3	LOS A	0.1	3.3	0.52	0.67	0.52	29.8
Approach		17	11.8	20	11.8	0.029	9.7	LOS A	0.1	3.3	0.52	0.67	0.52	30.2
North: SR 124														
4	T1	72	6.0	87	6.0	0.080	6.0	LOS A	0.4	9.2	0.40	0.54	0.40	35.3
14	R2	136	5.0	164	5.0	0.148	5.8	LOS A	0.7	17.6	0.40	0.60	0.40	35.0
Approach		208	5.3	251	5.3	0.148	5.9	LOS A	0.7	17.6	0.40	0.58	0.40	35.1
All Vehicles		633	7.6	763	7.6	0.278	6.9	LOS A	0.7	17.6	0.15	0.60	0.15	34.8

Site Level of Service (LOS) Method: Delay & Degree of Saturation (SIDRA). Site LOS Method is specified in the Parameter Settings dialog (Site tab).
Roundabout LOS Method: Same as Signalised Intersections.
Vehicle movement LOS values are based on average delay and v/c ratio (degree of saturation) per movement.
Intersection and Approach LOS values are based on average delay for all movements (v/c not used).
Roundabout Capacity Model: SIDRA Standard.
Delay Model: SIDRA Standard (Geometric Delay is included).
Queue Model: HCM Queue Formula.
Gap-Acceptance Capacity: SIDRA Standard (Akçelik M3D).
HV (%) values are calculated for All Movement Classes of All Heavy Vehicle Model Designation.

MOVEMENT SUMMARY

Site: 1 [2. SR 124 and 5th Avenue / Gateway Road and US Highway 12 Eastbound Ramp (2022-AM-Existing-Condition (Site Folder: 2022-AM-Existing-Conditions)]

SR 124 and 5th Avenue / Gateway Road and US Highway 12 Eastbound Ramp
Site Category: (None)
Roundabout

Vehicle Movement Performance

Mov ID	Turn	INPUT VOLUMES [Total veh/h	HV] %	DEMAND FLOWS [Total veh/h	HV] %	Deg. Satn v/c	Aver. Delay sec	Level of Service	95% BACK OF QUEUE [Veh. veh	Dist] ft	Prop. Que	Effective Stop Rate	Aver. No. Cycles	Aver. Speed mph
South: 5th Avenue														
3	L2	5	2.0	6	2.0	0.240	6.0	LOS A	1.2	30.5	0.26	0.31	0.26	25.0
8	T1	210	3.0	247	3.0	0.240	2.0	LOS A	1.2	30.5	0.26	0.31	0.26	24.8
18	R2	9	33.0	11	33.0	0.240	4.0	LOS A	1.2	30.5	0.26	0.31	0.26	25.0
Approach		224	4.2	264	4.2	0.240	2.2	LOS A	1.2	30.5	0.26	0.31	0.26	24.8
East: US Highway 12 Westbound Ramp														
1	L2	129	2.0	152	2.0	0.223	9.1	LOS A	0.9	24.7	0.39	0.66	0.39	31.4
16	R2	144	10.0	169	10.0	0.223	4.3	LOS A	0.9	24.7	0.23	0.58	0.23	31.5
Approach		273	6.2	321	6.2	0.223	6.5	LOS A	0.9	24.7	0.31	0.62	0.31	31.4
North: SR 124														
7	L2	7	2.0	8	2.0	0.096	9.5	LOS A	0.4	9.4	0.26	0.51	0.26	35.5
4	T1	75	7.0	88	7.0	0.096	5.3	LOS A	0.4	9.4	0.26	0.51	0.26	35.5
14	R2	2	50.0	2	50.0	0.096	6.2	LOS A	0.4	9.4	0.26	0.51	0.26	33.2
Approach		84	7.6	99	7.6	0.096	5.7	LOS A	0.4	9.4	0.26	0.51	0.26	35.4
West: Gateway Road														
5	L2	54	20.0	64	20.0	0.094	7.2	LOS A	0.4	11.3	0.39	0.60	0.39	23.9
2	T1	3	100.0	4	100.0	0.094	5.2	LOS A	0.4	11.3	0.39	0.60	0.39	23.7
12	R2	6	17.0	7	17.0	0.094	3.6	LOS A	0.4	11.3	0.39	0.60	0.39	23.3
Approach		63	23.5	74	23.5	0.094	6.8	LOS A	0.4	11.3	0.39	0.60	0.39	23.8
All Vehicles		644	7.4	758	7.4	0.240	4.9	LOS A	1.2	30.5	0.29	0.49	0.29	28.3

Site Level of Service (LOS) Method: Delay & Degree of Saturation (SIDRA). Site LOS Method is specified in the Parameter Settings dialog (Site tab).
Roundabout LOS Method: Same as Signalised Intersections.
Vehicle movement LOS values are based on average delay and v/c ratio (degree of saturation) per movement.
Intersection and Approach LOS values are based on average delay for all movements (v/c not used).
Roundabout Capacity Model: SIDRA Standard.
Delay Model: SIDRA Standard (Geometric Delay is included).
Queue Model: HCM Queue Formula.
Gap-Acceptance Capacity: SIDRA Standard (Akçelik M3D).
HV (%) values are calculated for All Movement Classes of All Heavy Vehicle Model Designation.

Intersection	
Int Delay, s/veh	3.6

Movement	WBL	WBR	NBT	NBR	SBL	SBT
Lane Configurations						
Traffic Vol, veh/h	5	113	123	9	62	149
Future Vol, veh/h	5	113	123	9	62	149
Conflicting Peds, #/hr	0	0	0	0	0	0
Sign Control	Stop	Stop	Free	Free	Free	Free
RT Channelized	-	None	-	None	-	None
Storage Length	0	-	-	-	-	-
Veh in Median Storage, #	0	-	0	-	-	0
Grade, %	0	-	0	-	-	0
Peak Hour Factor	81	81	81	81	81	81
Heavy Vehicles, %	2	8	2	2	6	2
Mvmt Flow	6	140	152	11	77	184

Major/Minor	Minor1		Major1		Major2	
Conflicting Flow All	496	158	0	0	163	0
Stage 1	158	-	-	-	-	-
Stage 2	338	-	-	-	-	-
Critical Hdwy	6.42	6.28	-	-	4.16	-
Critical Hdwy Stg 1	5.42	-	-	-	-	-
Critical Hdwy Stg 2	5.42	-	-	-	-	-
Follow-up Hdwy	3.518	3.372	-	-	2.254	-
Pot Cap-1 Maneuver	533	872	-	-	1392	-
Stage 1	871	-	-	-	-	-
Stage 2	722	-	-	-	-	-
Platoon blocked, %			-	-		-
Mov Cap-1 Maneuver	500	872	-	-	1392	-
Mov Cap-2 Maneuver	500	-	-	-	-	-
Stage 1	871	-	-	-	-	-
Stage 2	677	-	-	-	-	-

Approach	WB	NB	SB
HCM Control Delay, s	10.1	0	2.3
HCM LOS	B		

Minor Lane/Major Mvmt	NBT	NBR	WBLn1	SBL	SBT
Capacity (veh/h)	-	-	845	1392	-
HCM Lane V/C Ratio	-	-	0.172	0.055	-
HCM Control Delay (s)	-	-	10.1	7.7	0
HCM Lane LOS	-	-	B	A	A
HCM 95th %tile Q(veh)	-	-	0.6	0.2	-

Intersection	
Int Delay, s/veh	6.9

Movement	EBL	EBT	EBR	WBL	WBT	WBR	NBL	NBT	NBR	SBL	SBT	SBR
Lane Configurations												
Traffic Vol, veh/h	18	2	2	3	3	62	1	71	2	21	26	8
Future Vol, veh/h	18	2	2	3	3	62	1	71	2	21	26	8
Conflicting Peds, #/hr	0	0	0	0	0	0	0	0	0	0	0	0
Sign Control	Free	Free	Free	Free	Free	Free	Stop	Stop	Stop	Stop	Stop	Stop
RT Channelized	-	-	None	-	-	None	-	-	None	-	-	None
Storage Length	-	-	-	-	-	-	-	-	-	-	-	-
Veh in Median Storage, #	-	0	-	-	0	-	-	0	-	-	0	-
Grade, %	-	0	-	-	0	-	-	0	-	-	0	-
Peak Hour Factor	72	72	72	72	72	72	72	72	72	72	72	72
Heavy Vehicles, %	6	2	2	2	2	5	100	7	2	2	2	2
Mvmt Flow	25	3	3	4	4	86	1	99	3	29	36	11

Major/Minor	Major1			Major2			Minor1			Minor2		
Conflicting Flow All	90	0	0	6	0	0	134	153	5	161	111	47
Stage 1	-	-	-	-	-	-	55	55	-	55	55	-
Stage 2	-	-	-	-	-	-	79	98	-	106	56	-
Critical Hdwy	4.16	-	-	4.12	-	-	8.1	6.57	6.22	7.12	6.52	6.22
Critical Hdwy Stg 1	-	-	-	-	-	-	7.1	5.57	-	6.12	5.52	-
Critical Hdwy Stg 2	-	-	-	-	-	-	7.1	5.57	-	6.12	5.52	-
Follow-up Hdwy	2.254	-	-	2.218	-	-	4.4	4.063	3.318	3.518	4.018	3.318
Pot Cap-1 Maneuver	1480	-	-	1615	-	-	656	730	1078	804	779	1022
Stage 1	-	-	-	-	-	-	759	839	-	957	849	-
Stage 2	-	-	-	-	-	-	734	804	-	900	848	-
Platoon blocked, %		-	-		-	-						
Mov Cap-1 Maneuver	1480	-	-	1615	-	-	616	715	1078	707	763	1022
Mov Cap-2 Maneuver	-	-	-	-	-	-	616	715	-	707	763	-
Stage 1	-	-	-	-	-	-	746	825	-	941	846	-
Stage 2	-	-	-	-	-	-	693	802	-	777	834	-

Approach	EB	WB	NB	SB
HCM Control Delay, s	6.1	0.3	10.8	10.2
HCM LOS			B	B

Minor Lane/Major Mvmt	NBLn1	EBL	EBT	EBR	WBL	WBT	WBR	SBLn1
Capacity (veh/h)	720	1480	-	-	1615	-	-	768
HCM Lane V/C Ratio	0.143	0.017	-	-	0.003	-	-	0.099
HCM Control Delay (s)	10.8	7.5	0	-	7.2	0	-	10.2
HCM Lane LOS	B	A	A	-	A	A	-	B
HCM 95th %tile Q(veh)	0.5	0.1	-	-	0	-	-	0.3

Intersection	
Int Delay, s/veh	5

Movement	EBL	EBT	EBR	WBL	WBT	WBR	NBL	NBT	NBR	SBL	SBT	SBR
Lane Configurations												
Traffic Vol, veh/h	4	11	0	1	3	5	0	2	8	8	3	1
Future Vol, veh/h	4	11	0	1	3	5	0	2	8	8	3	1
Conflicting Peds, #/hr	0	0	0	0	0	0	0	0	0	0	0	0
Sign Control	Free	Free	Free	Free	Free	Free	Stop	Stop	Stop	Stop	Stop	Stop
RT Channelized	-	-	None	-	-	None	-	-	None	-	-	None
Storage Length	-	-	-	-	-	-	-	-	-	-	-	-
Veh in Median Storage, #	-	0	-	-	0	-	-	0	-	-	0	-
Grade, %	-	0	-	-	0	-	-	0	-	-	0	-
Peak Hour Factor	77	77	77	77	77	77	77	77	77	77	77	77
Heavy Vehicles, %	2	2	2	100	33	20	2	50	2	2	2	2
Mvmt Flow	5	14	0	1	4	6	0	3	10	10	4	1

Major/Minor	Major1			Major2			Minor1			Minor2		
Conflicting Flow All	10	0	0	14	0	0	36	36	14	40	33	7
Stage 1	-	-	-	-	-	-	24	24	-	9	9	-
Stage 2	-	-	-	-	-	-	12	12	-	31	24	-
Critical Hdwy	4.12	-	-	5.1	-	-	7.12	7	6.22	7.12	6.52	6.22
Critical Hdwy Stg 1	-	-	-	-	-	-	6.12	6	-	6.12	5.52	-
Critical Hdwy Stg 2	-	-	-	-	-	-	6.12	6	-	6.12	5.52	-
Follow-up Hdwy	2.218	-	-	3.1	-	-	3.518	4.45	3.318	3.518	4.018	3.318
Pot Cap-1 Maneuver	1610	-	-	1145	-	-	970	771	1066	964	860	1075
Stage 1	-	-	-	-	-	-	994	789	-	1012	888	-
Stage 2	-	-	-	-	-	-	1009	799	-	986	875	-
Platoon blocked, %		-	-		-	-						
Mov Cap-1 Maneuver	1610	-	-	1145	-	-	962	768	1066	950	857	1075
Mov Cap-2 Maneuver	-	-	-	-	-	-	962	768	-	950	857	-
Stage 1	-	-	-	-	-	-	991	787	-	1009	887	-
Stage 2	-	-	-	-	-	-	1002	798	-	970	872	-

Approach	EB	WB	NB	SB
HCM Control Delay, s	1.9	0.9	8.7	8.9
HCM LOS			A	A

Minor Lane/Major Mvmt	NBLn1	EBL	EBT	EBR	WBL	WBT	WBR	SBLn1
Capacity (veh/h)	989	1610	-	-	1145	-	-	934
HCM Lane V/C Ratio	0.013	0.003	-	-	0.001	-	-	0.017
HCM Control Delay (s)	8.7	7.2	0	-	8.1	0	-	8.9
HCM Lane LOS	A	A	A	-	A	A	-	A
HCM 95th %tile Q(veh)	0	0	-	-	0	-	-	0.1

Intersection	
Int Delay, s/veh	0.6

Movement	EBL	EBT	EBR	WBL	WBT	WBR	NBL	NBT	NBR	SBL	SBT	SBR
Lane Configurations												
Traffic Vol, veh/h	15	0	6	1	0	4	6	294	0	5	343	4
Future Vol, veh/h	15	0	6	1	0	4	6	294	0	5	343	4
Conflicting Peds, #/hr	0	0	0	0	0	0	0	0	0	0	0	0
Sign Control	Stop	Stop	Stop	Stop	Stop	Stop	Free	Free	Free	Free	Free	Free
RT Channelized	-	-	Stop	-	-	Stop	-	-	None	-	-	None
Storage Length	-	-	-	-	-	-	610	-	600	565	-	550
Veh in Median Storage, #	-	0	-	-	0	-	-	0	-	-	0	-
Grade, %	-	0	-	-	0	-	-	0	-	-	0	-
Peak Hour Factor	90	90	90	90	90	90	90	90	90	90	90	90
Heavy Vehicles, %	7	2	2	2	2	2	33	13	2	2	15	25
Mvmt Flow	17	0	7	1	0	4	7	327	0	6	381	4

Major/Minor	Minor2			Minor1			Major1			Major2		
Conflicting Flow All	571	734	191	544	738	164	385	0	0	327	0	0
Stage 1	393	393	-	341	341	-	-	-	-	-	-	-
Stage 2	178	341	-	203	397	-	-	-	-	-	-	-
Critical Hdwy	7.64	6.54	6.94	7.54	6.54	6.94	4.76	-	-	4.14	-	-
Critical Hdwy Stg 1	6.64	5.54	-	6.54	5.54	-	-	-	-	-	-	-
Critical Hdwy Stg 2	6.64	5.54	-	6.54	5.54	-	-	-	-	-	-	-
Follow-up Hdwy	3.57	4.02	3.32	3.52	4.02	3.32	2.53	-	-	2.22	-	-
Pot Cap-1 Maneuver	393	346	818	422	344	852	976	-	-	1229	-	-
Stage 1	590	604	-	647	637	-	-	-	-	-	-	-
Stage 2	792	637	-	780	602	-	-	-	-	-	-	-
Platoon blocked, %								-	-		-	-
Mov Cap-1 Maneuver	387	342	818	415	340	852	976	-	-	1229	-	-
Mov Cap-2 Maneuver	387	342	-	415	340	-	-	-	-	-	-	-
Stage 1	586	601	-	642	633	-	-	-	-	-	-	-
Stage 2	782	633	-	770	599	-	-	-	-	-	-	-

Approach	EB	WB	NB	SB
HCM Control Delay, s	11.9	8.4	0.2	0.1
HCM LOS	B	A		

Minor Lane/Major Mvmt	NBL	NBT	NBR	EBLn1	WBLn1	SBL	SBT	SBR
Capacity (veh/h)	976	-	-	542	1065	1229	-	-
HCM Lane V/C Ratio	0.007	-	-	0.043	0.005	0.005	-	-
HCM Control Delay (s)	8.7	-	-	11.9	8.4	7.9	-	-
HCM Lane LOS	A	-	-	B	A	A	-	-
HCM 95th %tile Q(veh)	0	-	-	0.1	0	0	-	-

MOVEMENT SUMMARY

Site: 1 [1. SR 124 / US Highway 12 Westbound Ramp (2022-PM-Existing-Conditions) (Site Folder: 2022-PM-Existing-Conditions)]

SR 124 / US Highway 12 Westbound Ramp
Site Category: (None)
Roundabout

Vehicle Movement Performance

Mov ID	Turn	INPUT VOLUMES [Total veh/h	HV] %	DEMAND FLOWS [Total veh/h	HV] %	Deg. Satn v/c	Aver. Delay sec	Level of Service	95% BACK OF QUEUE [Veh. veh	Dist] ft	Prop. Que	Effective Stop Rate	Aver. No. Cycles	Aver. Speed mph
South: SR 124														
3u	U	3	6.0	3	6.0	0.240	11.0	LOS B	0.0	0.0	0.00	0.57	0.00	35.9
3	L2	145	4.0	169	4.0	0.240	9.0	LOS A	0.0	0.0	0.00	0.57	0.00	35.4
8	T1	241	2.0	280	2.0	0.240	4.7	LOS A	0.0	0.0	0.00	0.57	0.00	35.7
Approach		389	2.8	452	2.8	0.240	6.4	LOS A	0.0	0.0	0.00	0.57	0.00	35.6
East: US Highway 12 Westbound Ramp														
1	L2	9	11.0	10	11.0	0.021	10.7	LOS B	0.1	2.3	0.48	0.64	0.48	30.7
16	R2	5	2.0	6	2.0	0.021	6.0	LOS A	0.1	2.3	0.48	0.64	0.48	30.3
Approach		14	7.8	16	7.8	0.021	9.0	LOS A	0.1	2.3	0.48	0.64	0.48	30.6
North: SR 124														
4	T1	38	11.0	44	11.0	0.039	5.5	LOS A	0.2	4.4	0.30	0.48	0.30	35.5
14	R2	484	3.0	563	3.0	0.456	5.5	LOS A	2.8	71.8	0.41	0.58	0.41	35.0
Approach		522	3.6	607	3.6	0.456	5.5	LOS A	2.8	71.8	0.40	0.57	0.40	35.0
All Vehicles		925	3.3	1076	3.3	0.456	5.9	LOS A	2.8	71.8	0.23	0.57	0.23	35.2

Site Level of Service (LOS) Method: Delay & Degree of Saturation (SIDRA). Site LOS Method is specified in the Parameter Settings dialog (Site tab).
Roundabout LOS Method: Same as Signalised Intersections.
Vehicle movement LOS values are based on average delay and v/c ratio (degree of saturation) per movement.
Intersection and Approach LOS values are based on average delay for all movements (v/c not used).
Roundabout Capacity Model: SIDRA Standard.
Delay Model: SIDRA Standard (Geometric Delay is included).
Queue Model: HCM Queue Formula.
Gap-Acceptance Capacity: SIDRA Standard (Akçelik M3D).
HV (%) values are calculated for All Movement Classes of All Heavy Vehicle Model Designation.

MOVEMENT SUMMARY

Site: 1 [2. SR 124 and 5th Avenue / Gateway Road and US Highway 12 Eastbound Ramp (2022-PM-Existing-Condition (Site Folder: 2022-PM-Existing-Conditions)]

SR 124 and 5th Avenue / Gateway Road and US Highway 12 Eastbound Ramp
Site Category: (None)
Roundabout

Vehicle Movement Performance

Mov ID	Turn	INPUT VOLUMES [Total veh/h	HV] %	DEMAND FLOWS [Total veh/h	HV] %	Deg. Satn v/c	Aver. Delay sec	Level of Service	95% BACK OF QUEUE [Veh. veh	Dist] ft	Prop. Que	Effective Stop Rate	Aver. No. Cycles	Aver. Speed mph
South: 5th Avenue														
3	L2	2	2.0	2	2.0	0.139	5.8	LOS A	0.6	15.7	0.18	0.27	0.18	25.0
8	T1	129	2.0	137	2.0	0.139	1.8	LOS A	0.6	15.7	0.18	0.27	0.18	24.9
18	R2	20	2.0	21	2.0	0.139	2.4	LOS A	0.6	15.7	0.18	0.27	0.18	24.5
Approach		151	2.0	161	2.0	0.139	1.9	LOS A	0.6	15.7	0.18	0.27	0.18	24.8
East: US Highway 12 Westbound Ramp														
1	L2	189	2.0	201	2.0	0.298	8.6	LOS A	1.3	32.8	0.30	0.61	0.30	31.6
6	T1	44	7.0	47	7.0	0.298	4.5	LOS A	1.3	32.8	0.30	0.61	0.30	31.7
16	R2	203	6.0	216	6.0	0.298	3.9	LOS A	1.3	32.8	0.17	0.55	0.17	31.7
Approach		436	4.4	464	4.4	0.298	6.0	LOS A	1.3	32.8	0.24	0.58	0.24	31.7
North: SR 124														
7	L2	4	25.0	4	25.0	0.061	10.4	LOS B	0.2	5.8	0.32	0.54	0.32	34.5
4	T1	46	4.0	49	4.0	0.061	5.6	LOS A	0.2	5.8	0.32	0.54	0.32	35.5
14	R2	6	17.0	6	17.0	0.061	5.8	LOS A	0.2	5.8	0.32	0.54	0.32	34.2
Approach		56	6.9	60	6.9	0.061	6.0	LOS A	0.2	5.8	0.32	0.54	0.32	35.3
West: Gateway Road														
5	L2	47	4.0	50	4.0	0.058	6.7	LOS A	0.2	6.2	0.36	0.58	0.36	24.0
2	T1	1	2.0	1	2.0	0.058	2.7	LOS A	0.2	6.2	0.36	0.58	0.36	23.8
12	R2	5	2.0	5	2.0	0.058	3.2	LOS A	0.2	6.2	0.36	0.58	0.36	23.4
Approach		53	3.8	56	3.8	0.058	6.3	LOS A	0.2	6.2	0.36	0.58	0.36	23.9
All Vehicles		696	4.0	740	4.0	0.298	5.1	LOS A	1.3	32.8	0.24	0.51	0.24	29.4

Site Level of Service (LOS) Method: Delay & Degree of Saturation (SIDRA). Site LOS Method is specified in the Parameter Settings dialog (Site tab).
Roundabout LOS Method: Same as Signalised Intersections.
Vehicle movement LOS values are based on average delay and v/c ratio (degree of saturation) per movement.
Intersection and Approach LOS values are based on average delay for all movements (v/c not used).
Roundabout Capacity Model: SIDRA Standard.
Delay Model: SIDRA Standard (Geometric Delay is included).
Queue Model: HCM Queue Formula.
Gap-Acceptance Capacity: SIDRA Standard (Akçelik M3D).
HV (%) values are calculated for All Movement Classes of All Heavy Vehicle Model Designation.

Intersection	
Int Delay, s/veh	4.2

Movement	WBL	WBR	NBT	NBR	SBL	SBT
Lane Configurations						
Traffic Vol, veh/h	18	72	77	10	117	129
Future Vol, veh/h	18	72	77	10	117	129
Conflicting Peds, #/hr	0	0	0	0	0	0
Sign Control	Stop	Stop	Free	Free	Free	Free
RT Channelized	-	None	-	None	-	None
Storage Length	0	-	-	-	-	-
Veh in Median Storage, #	0	-	0	-	-	0
Grade, %	0	-	0	-	-	0
Peak Hour Factor	89	89	89	89	89	89
Heavy Vehicles, %	2	3	2	2	2	3
Mvmt Flow	20	81	87	11	131	145

Major/Minor	Minor1		Major1		Major2	
Conflicting Flow All	500	93	0	0	98	0
Stage 1	93	-	-	-	-	-
Stage 2	407	-	-	-	-	-
Critical Hdwy	6.42	6.23	-	-	4.12	-
Critical Hdwy Stg 1	5.42	-	-	-	-	-
Critical Hdwy Stg 2	5.42	-	-	-	-	-
Follow-up Hdwy	3.518	3.327	-	-	2.218	-
Pot Cap-1 Maneuver	530	961	-	-	1495	-
Stage 1	931	-	-	-	-	-
Stage 2	672	-	-	-	-	-
Platoon blocked, %			-	-		-
Mov Cap-1 Maneuver	480	961	-	-	1495	-
Mov Cap-2 Maneuver	480	-	-	-	-	-
Stage 1	931	-	-	-	-	-
Stage 2	608	-	-	-	-	-

Approach	WB	NB	SB
HCM Control Delay, s	10.1	0	3.6
HCM LOS	B		

Minor Lane/Major Mvmt	NBT	NBR	WBLn1	SBL	SBT
Capacity (veh/h)	-	-	801	1495	-
HCM Lane V/C Ratio	-	-	0.126	0.088	-
HCM Control Delay (s)	-	-	10.1	7.6	0
HCM Lane LOS	-	-	B	A	A
HCM 95th %tile Q(veh)	-	-	0.4	0.3	-

Intersection	
Int Delay, s/veh	8

Movement	EBL	EBT	EBR	WBL	WBT	WBR	NBL	NBT	NBR	SBL	SBT	SBR
Lane Configurations												
Traffic Vol, veh/h	4	3	6	7	4	26	2	31	3	48	69	11
Future Vol, veh/h	4	3	6	7	4	26	2	31	3	48	69	11
Conflicting Peds, #/hr	0	0	0	0	0	0	0	0	0	0	0	0
Sign Control	Free	Free	Free	Free	Free	Free	Stop	Stop	Stop	Stop	Stop	Stop
RT Channelized	-	-	None	-	-	None	-	-	None	-	-	None
Storage Length	-	-	-	-	-	-	-	-	-	-	-	-
Veh in Median Storage, #	-	0	-	-	0	-	-	0	-	-	0	-
Grade, %	-	0	-	-	0	-	-	0	-	-	0	-
Peak Hour Factor	85	85	85	85	85	85	85	85	85	85	85	85
Heavy Vehicles, %	2	2	2	14	2	2	2	2	2	2	2	2
Mvmt Flow	5	4	7	8	5	31	2	36	4	56	81	13

Major/Minor	Major1			Major2			Minor1			Minor2		
Conflicting Flow All	36	0	0	11	0	0	102	70	8	75	58	21
Stage 1	-	-	-	-	-	-	18	18	-	37	37	-
Stage 2	-	-	-	-	-	-	84	52	-	38	21	-
Critical Hdwy	4.12	-	-	4.24	-	-	7.12	6.52	6.22	7.12	6.52	6.22
Critical Hdwy Stg 1	-	-	-	-	-	-	6.12	5.52	-	6.12	5.52	-
Critical Hdwy Stg 2	-	-	-	-	-	-	6.12	5.52	-	6.12	5.52	-
Follow-up Hdwy	2.218	-	-	2.326	-	-	3.518	4.018	3.318	3.518	4.018	3.318
Pot Cap-1 Maneuver	1575	-	-	1533	-	-	879	821	1074	915	833	1056
Stage 1	-	-	-	-	-	-	1001	880	-	978	864	-
Stage 2	-	-	-	-	-	-	924	852	-	977	878	-
Platoon blocked, %		-	-		-	-						
Mov Cap-1 Maneuver	1575	-	-	1533	-	-	798	814	1074	876	826	1056
Mov Cap-2 Maneuver	-	-	-	-	-	-	798	814	-	876	826	-
Stage 1	-	-	-	-	-	-	998	877	-	975	860	-
Stage 2	-	-	-	-	-	-	822	848	-	930	875	-

Approach	EB	WB	NB	SB
HCM Control Delay, s	2.2	1.4	9.6	10.1
HCM LOS			A	B

Minor Lane/Major Mvmt	NBLn1	EBL	EBT	EBR	WBL	WBT	WBR	SBLn1
Capacity (veh/h)	830	1575	-	-	1533	-	-	861
HCM Lane V/C Ratio	0.051	0.003	-	-	0.005	-	-	0.175
HCM Control Delay (s)	9.6	7.3	0	-	7.4	0	-	10.1
HCM Lane LOS	A	A	A	-	A	A	-	B
HCM 95th %tile Q(veh)	0.2	0	-	-	0	-	-	0.6

Intersection	
Int Delay, s/veh	3.7

Movement	EBL	EBT	EBR	WBL	WBT	WBR	NBL	NBT	NBR	SBL	SBT	SBR
Lane Configurations												
Traffic Vol, veh/h	1	9	0	14	20	15	0	2	3	9	5	1
Future Vol, veh/h	1	9	0	14	20	15	0	2	3	9	5	1
Conflicting Peds, #/hr	0	0	0	0	0	0	0	0	0	0	0	0
Sign Control	Free	Free	Free	Free	Free	Free	Stop	Stop	Stop	Stop	Stop	Stop
RT Channelized	-	-	None	-	-	None	-	-	None	-	-	None
Storage Length	-	-	-	-	-	-	-	-	-	-	-	-
Veh in Median Storage, #	-	0	-	-	0	-	-	0	-	-	0	-
Grade, %	-	0	-	-	0	-	-	0	-	-	0	-
Peak Hour Factor	86	86	86	86	86	86	86	86	86	86	86	86
Heavy Vehicles, %	2	11	2	2	5	2	2	2	2	2	2	2
Mvmt Flow	1	10	0	16	23	17	0	2	3	10	6	1

Major/Minor	Major1			Major2			Minor1			Minor2		
Conflicting Flow All	40	0	0	10	0	0	79	84	10	79	76	32
Stage 1	-	-	-	-	-	-	12	12	-	64	64	-
Stage 2	-	-	-	-	-	-	67	72	-	15	12	-
Critical Hdwy	4.12	-	-	4.12	-	-	7.12	6.52	6.22	7.12	6.52	6.22
Critical Hdwy Stg 1	-	-	-	-	-	-	6.12	5.52	-	6.12	5.52	-
Critical Hdwy Stg 2	-	-	-	-	-	-	6.12	5.52	-	6.12	5.52	-
Follow-up Hdwy	2.218	-	-	2.218	-	-	3.518	4.018	3.318	3.518	4.018	3.318
Pot Cap-1 Maneuver	1570	-	-	1610	-	-	910	806	1071	910	814	1042
Stage 1	-	-	-	-	-	-	1009	886	-	947	842	-
Stage 2	-	-	-	-	-	-	943	835	-	1005	886	-
Platoon blocked, %		-	-		-	-						
Mov Cap-1 Maneuver	1570	-	-	1610	-	-	896	797	1071	897	805	1042
Mov Cap-2 Maneuver	-	-	-	-	-	-	896	797	-	897	805	-
Stage 1	-	-	-	-	-	-	1008	885	-	946	834	-
Stage 2	-	-	-	-	-	-	926	827	-	998	885	-

Approach	EB	WB	NB	SB
HCM Control Delay, s	0.7	2.1	8.8	9.2
HCM LOS			A	A

Minor Lane/Major Mvmt	NBLn1	EBL	EBT	EBR	WBL	WBT	WBR	SBLn1
Capacity (veh/h)	942	1570	-	-	1610	-	-	872
HCM Lane V/C Ratio	0.006	0.001	-	-	0.01	-	-	0.02
HCM Control Delay (s)	8.8	7.3	0	-	7.3	0	-	9.2
HCM Lane LOS	A	A	A	-	A	A	-	A
HCM 95th %tile Q(veh)	0	0	-	-	0	-	-	0.1

Intersection	
Int Delay, s/veh	0.6

Movement	EBL	EBT	EBR	WBL	WBT	WBR	NBL	NBT	NBR	SBL	SBT	SBR
Lane Configurations												
Traffic Vol, veh/h	13	2	7	3	0	4	7	951	1	6	343	34
Future Vol, veh/h	13	2	7	3	0	4	7	951	1	6	343	34
Conflicting Peds, #/hr	0	0	0	0	0	0	0	0	0	0	0	0
Sign Control	Stop	Stop	Stop	Stop	Stop	Stop	Free	Free	Free	Free	Free	Free
RT Channelized	-	-	Stop	-	-	Stop	-	-	None	-	-	None
Storage Length	-	-	-	-	-	-	610	-	600	565	-	550
Veh in Median Storage, #	-	0	-	-	0	-	-	0	-	-	0	-
Grade, %	-	0	-	-	0	-	-	0	-	-	0	-
Peak Hour Factor	79	79	79	79	79	79	79	79	79	79	79	79
Heavy Vehicles, %	2	2	2	2	2	2	14	6	2	17	19	6
Mvmt Flow	16	3	9	4	0	5	9	1204	1	8	434	43

Major/Minor	Minor2			Minor1			Major1			Major2		
Conflicting Flow All	1070	1673	217	1457	1715	602	477	0	0	1205	0	0
Stage 1	450	450	-	1222	1222	-	-	-	-	-	-	-
Stage 2	620	1223	-	235	493	-	-	-	-	-	-	-
Critical Hdwy	7.54	6.54	6.94	7.54	6.54	6.94	4.38	-	-	4.44	-	-
Critical Hdwy Stg 1	6.54	5.54	-	6.54	5.54	-	-	-	-	-	-	-
Critical Hdwy Stg 2	6.54	5.54	-	6.54	5.54	-	-	-	-	-	-	-
Follow-up Hdwy	3.52	4.02	3.32	3.52	4.02	3.32	2.34	-	-	2.37	-	-
Pot Cap-1 Maneuver	175	95	787	91	89	443	1001	-	-	498	-	-
Stage 1	558	570	-	190	250	-	-	-	-	-	-	-
Stage 2	442	250	-	747	545	-	-	-	-	-	-	-
Platoon blocked, %								-	-		-	-
Mov Cap-1 Maneuver	170	93	787	86	87	443	1001	-	-	498	-	-
Mov Cap-2 Maneuver	170	93	-	86	87	-	-	-	-	-	-	-
Stage 1	553	561	-	188	248	-	-	-	-	-	-	-
Stage 2	433	248	-	723	536	-	-	-	-	-	-	-

Approach	EB	WB	NB	SB
HCM Control Delay, s	23.2	23.7	0.1	0.2
HCM LOS	C	C		

Minor Lane/Major Mvmt	NBL	NBT	NBR	EBLn1	WBLn1	SBL	SBT	SBR
Capacity (veh/h)	1001	-	-	225	201	498	-	-
HCM Lane V/C Ratio	0.009	-	-	0.124	0.044	0.015	-	-
HCM Control Delay (s)	8.6	-	-	23.2	23.7	12.3	-	-
HCM Lane LOS	A	-	-	C	C	B	-	-
HCM 95th %tile Q(veh)	0	-	-	0.4	0.1	0	-	-

MOVEMENT SUMMARY

Site: 1 [1. SR 124 / US Highway 12 Westbound Ramp (2025-AM-Without-Project) (Site Folder: 2025-AM-Without-Project)]

SR 124 / US Highway 12 Westbound Ramp
Site Category: (None)
Roundabout

Vehicle Movement Performance

Mov ID	Turn	INPUT VOLUMES [Total veh/h	HV] %	DEMAND FLOWS [Total veh/h	HV] %	Deg. Satn v/c	Aver. Delay sec	Level of Service	95% BACK OF QUEUE [Veh. veh	Dist] ft	Prop. Que	Effective Stop Rate	Aver. No. Cycles	Aver. Speed mph
South: SR 124														
3u	U	1	2.0	1	2.0	0.322	11.0	LOS B	0.0	0.0	0.00	0.62	0.00	35.5
3	L2	285	9.0	343	9.0	0.322	9.1	LOS A	0.0	0.0	0.00	0.62	0.00	34.7
8	T1	186	8.0	224	8.0	0.322	4.8	LOS A	0.0	0.0	0.00	0.62	0.00	35.0
Approach		472	8.6	569	8.6	0.322	7.4	LOS A	0.0	0.0	0.00	0.62	0.00	34.8
East: US Highway 12 Westbound Ramp														
1	L2	69	9.0	83	9.0	0.131	12.1	LOS B	0.6	16.2	0.59	0.78	0.59	29.6
16	R2	6	17.0	7	17.0	0.131	8.4	LOS A	0.6	16.2	0.59	0.78	0.59	29.0
Approach		75	9.6	90	9.6	0.131	11.8	LOS B	0.6	16.2	0.59	0.78	0.59	29.6
North: SR 124														
4	T1	87	6.0	105	6.0	0.106	6.8	LOS A	0.5	13.4	0.50	0.60	0.50	35.0
14	R2	144	5.0	173	5.0	0.163	6.2	LOS A	0.8	19.9	0.45	0.63	0.45	34.9
Approach		231	5.4	278	5.4	0.163	6.4	LOS A	0.8	19.9	0.47	0.62	0.47	34.9
All Vehicles		778	7.7	937	7.7	0.322	7.5	LOS A	0.8	19.9	0.20	0.63	0.20	34.3

Site Level of Service (LOS) Method: Delay & Degree of Saturation (SIDRA). Site LOS Method is specified in the Parameter Settings dialog (Site tab).
Roundabout LOS Method: Same as Signalised Intersections.
Vehicle movement LOS values are based on average delay and v/c ratio (degree of saturation) per movement.
Intersection and Approach LOS values are based on average delay for all movements (v/c not used).
Roundabout Capacity Model: SIDRA Standard.
Delay Model: SIDRA Standard (Geometric Delay is included).
Queue Model: HCM Queue Formula.
Gap-Acceptance Capacity: SIDRA Standard (Akçelik M3D).
HV (%) values are calculated for All Movement Classes of All Heavy Vehicle Model Designation.

MOVEMENT SUMMARY

Site: 1 [2. SR 124 and 5th Avenue / Gateway Road and US Highway 12 Eastbound Ramp (2025-AM-Without-Project) (Site Folder: 2025-AM-Without-Project)]

SR 124 and 5th Avenue / Gateway Road and US Highway 12 Eastbound Ramp
Site Category: (None)
Roundabout

Vehicle Movement Performance

Mov ID	Turn	INPUT VOLUMES [Total veh/h	HV] %	DEMAND FLOWS [Total veh/h	HV] %	Deg. Satn v/c	Aver. Delay sec	Level of Service	95% BACK OF QUEUE [Veh. veh	Dist] ft	Prop. Que	Effective Stop Rate	Aver. No. Cycles	Aver. Speed mph
South: 5th Avenue														
3	L2	7	2.0	8	2.0	0.322	6.2	LOS A	1.8	47.0	0.33	0.35	0.33	24.9
8	T1	254	3.0	299	3.0	0.322	2.2	LOS A	1.8	47.0	0.33	0.35	0.33	24.8
18	R2	26	33.0	31	33.0	0.322	4.3	LOS A	1.8	47.0	0.33	0.35	0.33	25.0
Approach		287	5.7	338	5.7	0.322	2.5	LOS A	1.8	47.0	0.33	0.35	0.33	24.8
East: US Highway 12 Westbound Ramp														
1	L2	290	2.0	341	2.0	0.432	9.7	LOS A	2.3	59.8	0.52	0.72	0.52	30.9
6	T1	78	2.0	92	2.0	0.432	5.5	LOS A	2.3	59.8	0.52	0.72	0.52	31.0
16	R2	153	10.0	180	10.0	0.432	4.1	LOS A	2.3	59.8	0.14	0.54	0.14	32.0
Approach		521	4.3	613	4.3	0.432	7.4	LOS A	2.3	59.8	0.41	0.67	0.41	31.2
North: SR 124														
7	L2	7	2.0	8	2.0	0.234	10.8	LOS B	1.1	29.0	0.52	0.68	0.52	34.8
4	T1	133	7.0	156	7.0	0.234	6.8	LOS A	1.1	29.0	0.52	0.68	0.52	34.8
14	R2	17	50.0	20	50.0	0.234	8.7	LOS A	1.1	29.0	0.52	0.68	0.52	32.6
Approach		157	11.4	185	11.4	0.234	7.2	LOS A	1.1	29.0	0.52	0.68	0.52	34.6
West: Gateway Road														
5	L2	65	20.0	76	20.0	0.150	9.1	LOS A	0.7	20.3	0.58	0.74	0.58	23.4
2	T1	6	100.0	7	100.0	0.150	9.4	LOS A	0.7	20.3	0.58	0.74	0.58	23.3
12	R2	6	17.0	7	17.0	0.150	5.5	LOS A	0.7	20.3	0.58	0.74	0.58	22.9
Approach		77	26.0	91	26.0	0.150	8.9	LOS A	0.7	20.3	0.58	0.74	0.58	23.3
All Vehicles		1042	7.4	1226	7.4	0.432	6.1	LOS A	2.3	59.8	0.42	0.59	0.42	28.9

Site Level of Service (LOS) Method: Delay & Degree of Saturation (SIDRA). Site LOS Method is specified in the Parameter Settings dialog (Site tab).
Roundabout LOS Method: Same as Signalised Intersections.
Vehicle movement LOS values are based on average delay and v/c ratio (degree of saturation) per movement.
Intersection and Approach LOS values are based on average delay for all movements (v/c not used).
Roundabout Capacity Model: SIDRA Standard.
Delay Model: SIDRA Standard (Geometric Delay is included).
Queue Model: HCM Queue Formula.
Gap-Acceptance Capacity: SIDRA Standard (Akçelik M3D).
HV (%) values are calculated for All Movement Classes of All Heavy Vehicle Model Designation.

Intersection	
Int Delay, s/veh	5.3

Movement	EBL	EBT	EBR	WBL	WBT	WBR	NBL	NBT	NBR	SBL	SBT	SBR
Lane Configurations												
Traffic Vol, veh/h	2	0	0	5	1	161	1	136	12	234	183	13
Future Vol, veh/h	2	0	0	5	1	161	1	136	12	234	183	13
Conflicting Peds, #/hr	0	0	0	0	0	0	0	0	0	0	0	0
Sign Control	Stop	Stop	Stop	Stop	Stop	Stop	Free	Free	Free	Free	Free	Free
RT Channelized	-	-	None	-	-	None	-	-	None	-	-	None
Storage Length	-	-	-	-	-	-	-	-	-	-	-	-
Veh in Median Storage, #	-	0	-	-	0	-	-	0	-	-	0	-
Grade, %	-	0	-	-	0	-	-	0	-	-	0	-
Peak Hour Factor	81	81	81	81	81	81	81	81	81	81	81	81
Heavy Vehicles, %	2	2	2	2	2	8	2	2	2	6	2	2
Mvmt Flow	2	0	0	6	1	199	1	168	15	289	226	16

Major/Minor	Minor2			Minor1			Major1			Major2		
Conflicting Flow All	1090	997	234	990	998	176	242	0	0	183	0	0
Stage 1	812	812	-	178	178	-	-	-	-	-	-	-
Stage 2	278	185	-	812	820	-	-	-	-	-	-	-
Critical Hdwy	7.12	6.52	6.22	7.12	6.52	6.28	4.12	-	-	4.16	-	-
Critical Hdwy Stg 1	6.12	5.52	-	6.12	5.52	-	-	-	-	-	-	-
Critical Hdwy Stg 2	6.12	5.52	-	6.12	5.52	-	-	-	-	-	-	-
Follow-up Hdwy	3.518	4.018	3.318	3.518	4.018	3.372	2.218	-	-	2.254	-	-
Pot Cap-1 Maneuver	193	244	805	225	244	852	1324	-	-	1368	-	-
Stage 1	373	392	-	824	752	-	-	-	-	-	-	-
Stage 2	728	747	-	373	389	-	-	-	-	-	-	-
Platoon blocked, %								-	-		-	-
Mov Cap-1 Maneuver	119	184	805	182	184	852	1324	-	-	1368	-	-
Mov Cap-2 Maneuver	119	184	-	182	184	-	-	-	-	-	-	-
Stage 1	373	296	-	823	751	-	-	-	-	-	-	-
Stage 2	557	746	-	282	294	-	-	-	-	-	-	-

Approach	EB	WB	NB	SB
HCM Control Delay, s	35.9	11.6	0.1	4.5
HCM LOS	E	B		

Minor Lane/Major Mvmt	NBL	NBT	NBR	EBLn1	WBLn1	SBL	SBT	SBR
Capacity (veh/h)	1324	-	-	119	753	1368	-	-
HCM Lane V/C Ratio	0.001	-	-	0.021	0.274	0.211	-	-
HCM Control Delay (s)	7.7	0	-	35.9	11.6	8.3	0	-
HCM Lane LOS	A	A	-	E	B	A	A	-
HCM 95th %tile Q(veh)	0	-	-	0.1	1.1	0.8	-	-

Intersection	
Int Delay, s/veh	7.3

Movement	EBL	EBT	EBR	WBL	WBT	WBR	NBL	NBT	NBR	SBL	SBT	SBR
Lane Configurations												
Traffic Vol, veh/h	28	2	2	4	3	68	2	79	2	22	29	9
Future Vol, veh/h	28	2	2	4	3	68	2	79	2	22	29	9
Conflicting Peds, #/hr	0	0	0	0	0	0	0	0	0	0	0	0
Sign Control	Free	Free	Free	Free	Free	Free	Stop	Stop	Stop	Stop	Stop	Stop
RT Channelized	-	-	None	-	-	None	-	-	None	-	-	None
Storage Length	-	-	-	-	-	-	-	-	-	-	-	-
Veh in Median Storage, #	-	0	-	-	0	-	-	0	-	-	0	-
Grade, %	-	0	-	-	0	-	-	0	-	-	0	-
Peak Hour Factor	72	72	72	72	72	72	72	72	72	72	72	72
Heavy Vehicles, %	6	2	2	2	2	5	100	7	2	2	2	2
Mvmt Flow	39	3	3	6	4	94	3	110	3	31	40	13

Major/Minor	Major1			Major2			Minor1			Minor2		
Conflicting Flow All	98	0	0	6	0	0	173	193	5	202	147	51
Stage 1	-	-	-	-	-	-	83	83	-	63	63	-
Stage 2	-	-	-	-	-	-	90	110	-	139	84	-
Critical Hdwy	4.16	-	-	4.12	-	-	8.1	6.57	6.22	7.12	6.52	6.22
Critical Hdwy Stg 1	-	-	-	-	-	-	7.1	5.57	-	6.12	5.52	-
Critical Hdwy Stg 2	-	-	-	-	-	-	7.1	5.57	-	6.12	5.52	-
Follow-up Hdwy	2.254	-	-	2.218	-	-	4.4	4.063	3.318	3.518	4.018	3.318
Pot Cap-1 Maneuver	1470	-	-	1615	-	-	615	693	1078	756	744	1017
Stage 1	-	-	-	-	-	-	730	816	-	948	842	-
Stage 2	-	-	-	-	-	-	723	795	-	864	825	-
Platoon blocked, %		-	-		-	-						
Mov Cap-1 Maneuver	1470	-	-	1615	-	-	568	672	1078	644	721	1017
Mov Cap-2 Maneuver	-	-	-	-	-	-	568	672	-	644	721	-
Stage 1	-	-	-	-	-	-	710	794	-	922	839	-
Stage 2	-	-	-	-	-	-	677	792	-	723	803	-

Approach	EB	WB	NB	SB
HCM Control Delay, s	6.6	0.4	11.4	10.6
HCM LOS			B	B

Minor Lane/Major Mvmt	NBLn1	EBL	EBT	EBR	WBL	WBT	WBR	SBLn1
Capacity (veh/h)	675	1470	-	-	1615	-	-	721
HCM Lane V/C Ratio	0.171	0.026	-	-	0.003	-	-	0.116
HCM Control Delay (s)	11.4	7.5	0	-	7.2	0	-	10.6
HCM Lane LOS	B	A	A	-	A	A	-	B
HCM 95th %tile Q(veh)	0.6	0.1	-	-	0	-	-	0.4

Intersection	
Int Delay, s/veh	4.9

Movement	EBL	EBT	EBR	WBL	WBT	WBR	NBL	NBT	NBR	SBL	SBT	SBR
Lane Configurations												
Traffic Vol, veh/h	4	12	0	1	3	5	0	2	8	8	3	1
Future Vol, veh/h	4	12	0	1	3	5	0	2	8	8	3	1
Conflicting Peds, #/hr	0	0	0	0	0	0	0	0	0	0	0	0
Sign Control	Free	Free	Free	Free	Free	Free	Stop	Stop	Stop	Stop	Stop	Stop
RT Channelized	-	-	None	-	-	None	-	-	None	-	-	None
Storage Length	-	-	-	-	-	-	-	-	-	-	-	-
Veh in Median Storage, #	-	0	-	-	0	-	-	0	-	-	0	-
Grade, %	-	0	-	-	0	-	-	0	-	-	0	-
Peak Hour Factor	77	77	77	77	77	77	77	77	77	77	77	77
Heavy Vehicles, %	2	2	2	100	33	20	2	50	2	2	2	2
Mvmt Flow	5	16	0	1	4	6	0	3	10	10	4	1

Major/Minor	Major1			Major2			Minor1			Minor2		
Conflicting Flow All	10	0	0	16	0	0	38	38	16	42	35	7
Stage 1	-	-	-	-	-	-	26	26	-	9	9	-
Stage 2	-	-	-	-	-	-	12	12	-	33	26	-
Critical Hdwy	4.12	-	-	5.1	-	-	7.12	7	6.22	7.12	6.52	6.22
Critical Hdwy Stg 1	-	-	-	-	-	-	6.12	6	-	6.12	5.52	-
Critical Hdwy Stg 2	-	-	-	-	-	-	6.12	6	-	6.12	5.52	-
Follow-up Hdwy	2.218	-	-	3.1	-	-	3.518	4.45	3.318	3.518	4.018	3.318
Pot Cap-1 Maneuver	1610	-	-	1143	-	-	967	769	1063	961	857	1075
Stage 1	-	-	-	-	-	-	992	787	-	1012	888	-
Stage 2	-	-	-	-	-	-	1009	799	-	983	874	-
Platoon blocked, %		-	-		-	-						
Mov Cap-1 Maneuver	1610	-	-	1143	-	-	959	766	1063	947	854	1075
Mov Cap-2 Maneuver	-	-	-	-	-	-	959	766	-	947	854	-
Stage 1	-	-	-	-	-	-	989	785	-	1009	887	-
Stage 2	-	-	-	-	-	-	1002	798	-	967	871	-

Approach	EB	WB	NB	SB
HCM Control Delay, s	1.8	0.9	8.7	8.9
HCM LOS			A	A

Minor Lane/Major Mvmt	NBLn1	EBL	EBT	EBR	WBL	WBT	WBR	SBLn1
Capacity (veh/h)	987	1610	-	-	1143	-	-	931
HCM Lane V/C Ratio	0.013	0.003	-	-	0.001	-	-	0.017
HCM Control Delay (s)	8.7	7.2	0	-	8.2	0	-	8.9
HCM Lane LOS	A	A	A	-	A	A	-	A
HCM 95th %tile Q(veh)	0	0	-	-	0	-	-	0.1

Intersection	
Int Delay, s/veh	0.5

Movement	EBL	EBT	EBR	WBL	WBT	WBR	NBL	NBT	NBR	SBL	SBT	SBR
Lane Configurations												
Traffic Vol, veh/h	16	0	6	1	0	4	6	367	0	5	377	4
Future Vol, veh/h	16	0	6	1	0	4	6	367	0	5	377	4
Conflicting Peds, #/hr	0	0	0	0	0	0	0	0	0	0	0	0
Sign Control	Stop	Stop	Stop	Stop	Stop	Stop	Free	Free	Free	Free	Free	Free
RT Channelized	-	-	Stop	-	-	Stop	-	-	None	-	-	None
Storage Length	-	-	-	-	-	-	610	-	600	565	-	550
Veh in Median Storage, #	-	0	-	-	0	-	-	0	-	-	0	-
Grade, %	-	0	-	-	0	-	-	0	-	-	0	-
Peak Hour Factor	90	90	90	90	90	90	90	90	90	90	90	90
Heavy Vehicles, %	7	2	2	2	2	2	33	13	2	2	15	25
Mvmt Flow	18	0	7	1	0	4	7	408	0	6	419	4

Major/Minor	Minor2			Minor1			Major1			Major2		
Conflicting Flow All	649	853	210	644	857	204	423	0	0	408	0	0
Stage 1	431	431	-	422	422	-	-	-	-	-	-	-
Stage 2	218	422	-	222	435	-	-	-	-	-	-	-
Critical Hdwy	7.64	6.54	6.94	7.54	6.54	6.94	4.76	-	-	4.14	-	-
Critical Hdwy Stg 1	6.64	5.54	-	6.54	5.54	-	-	-	-	-	-	-
Critical Hdwy Stg 2	6.64	5.54	-	6.54	5.54	-	-	-	-	-	-	-
Follow-up Hdwy	3.57	4.02	3.32	3.52	4.02	3.32	2.53	-	-	2.22	-	-
Pot Cap-1 Maneuver	345	295	796	358	293	803	940	-	-	1147	-	-
Stage 1	560	581	-	580	587	-	-	-	-	-	-	-
Stage 2	750	587	-	760	579	-	-	-	-	-	-	-
Platoon blocked, %								-	-		-	-
Mov Cap-1 Maneuver	340	291	796	352	289	803	940	-	-	1147	-	-
Mov Cap-2 Maneuver	340	291	-	352	289	-	-	-	-	-	-	-
Stage 1	556	578	-	576	583	-	-	-	-	-	-	-
Stage 2	740	583	-	750	576	-	-	-	-	-	-	-

Approach	EB	WB	NB	SB
HCM Control Delay, s	13.1	8.6	0.1	0.1
HCM LOS	B	A		

Minor Lane/Major Mvmt	NBL	NBT	NBR	EBLn1	WBLn1	SBL	SBT	SBR
Capacity (veh/h)	940	-	-	468	1004	1147	-	-
HCM Lane V/C Ratio	0.007	-	-	0.052	0.006	0.005	-	-
HCM Control Delay (s)	8.9	-	-	13.1	8.6	8.2	-	-
HCM Lane LOS	A	-	-	B	A	A	-	-
HCM 95th %tile Q(veh)	0	-	-	0.2	0	0	-	-

MOVEMENT SUMMARY

Site: 1 [1. SR 124 / US Highway 12 Westbound Ramp (2025-PM-Without-Project) (Site Folder: 2025-PM-Without-Project)]

SR 124 / US Highway 12 Westbound Ramp
Site Category: (None)
Roundabout

Vehicle Movement Performance

Mov ID	Turn	INPUT VOLUMES [Total veh/h	HV] %	DEMAND FLOWS [Total veh/h	HV] %	Deg. Satn v/c	Aver. Delay sec	Level of Service	95% BACK OF QUEUE [Veh. veh	Dist] ft	Prop. Que	Effective Stop Rate	Aver. No. Cycles	Aver. Speed mph
South: SR 124														
3u	U	3	6.0	3	6.0	0.392	11.1	LOS B	0.0	0.0	0.00	0.62	0.00	35.4
3	L2	356	4.0	414	4.0	0.392	9.1	LOS A	0.0	0.0	0.00	0.62	0.00	34.9
8	T1	267	2.0	310	2.0	0.392	4.8	LOS A	0.0	0.0	0.00	0.62	0.00	35.2
Approach		626	3.2	728	3.2	0.392	7.2	LOS A	0.0	0.0	0.00	0.62	0.00	35.1
East: US Highway 12 Westbound Ramp														
1	L2	57	11.0	66	11.0	0.117	13.5	LOS B	0.5	14.9	0.64	0.80	0.64	29.1
16	R2	5	2.0	6	2.0	0.117	8.5	LOS A	0.5	14.9	0.64	0.80	0.64	28.8
Approach		62	10.3	72	10.3	0.117	13.1	LOS B	0.5	14.9	0.64	0.80	0.64	29.1
North: SR 124														
4	T1	45	11.0	52	11.0	0.058	7.1	LOS A	0.3	7.3	0.51	0.60	0.51	34.9
14	R2	514	3.0	598	3.0	0.567	8.1	LOS A	4.4	111.9	0.66	0.78	0.74	33.9
Approach		559	3.6	650	3.6	0.567	8.0	LOS A	4.4	111.9	0.65	0.77	0.72	34.0
All Vehicles		1247	3.7	1450	3.7	0.567	7.9	LOS A	4.4	111.9	0.32	0.69	0.36	34.2

Site Level of Service (LOS) Method: Delay & Degree of Saturation (SIDRA). Site LOS Method is specified in the Parameter Settings dialog (Site tab).
Roundabout LOS Method: Same as Signalised Intersections.
Vehicle movement LOS values are based on average delay and v/c ratio (degree of saturation) per movement.
Intersection and Approach LOS values are based on average delay for all movements (v/c not used).
Roundabout Capacity Model: SIDRA Standard.
Delay Model: SIDRA Standard (Geometric Delay is included).
Queue Model: HCM Queue Formula.
Gap-Acceptance Capacity: SIDRA Standard (Akçelik M3D).
HV (%) values are calculated for All Movement Classes of All Heavy Vehicle Model Designation.

MOVEMENT SUMMARY

Site: 1 [2. SR 124 and 5th Avenue / Gateway Road and US Highway 12 Eastbound Ramp (2025-PM-Without-Project) (Site Folder: 2025-PM-Without-Project)]

SR 124 and 5th Avenue / Gateway Road and US Highway 12 Eastbound Ramp
Site Category: (None)
Roundabout

Vehicle Movement Performance

Mov ID	Turn	INPUT VOLUMES [Total veh/h	HV] %	DEMAND FLOWS [Total veh/h	HV] %	Deg. Satn v/c	Aver. Delay sec	Level of Service	95% BACK OF QUEUE [Veh. veh	Dist] ft	Prop. Que	Effective Stop Rate	Aver. No. Cycles	Aver. Speed mph
South: 5th Avenue														
3	L2	3	2.0	3	2.0	0.389	6.3	LOS A	2.3	59.3	0.36	0.36	0.36	24.8
8	T1	310	2.0	330	2.0	0.389	2.3	LOS A	2.3	59.3	0.36	0.36	0.36	24.7
18	R2	85	2.0	90	2.0	0.389	2.9	LOS A	2.3	59.3	0.36	0.36	0.36	24.2
Approach		398	2.0	423	2.0	0.389	2.4	LOS A	2.3	59.3	0.36	0.36	0.36	24.6
East: US Highway 12 Westbound Ramp														
1	L2	289	2.0	307	2.0	0.429	9.9	LOS A	2.3	60.2	0.54	0.73	0.54	31.0
6	T1	60	7.0	64	7.0	0.429	5.8	LOS A	2.3	60.2	0.54	0.73	0.54	31.0
16	R2	215	6.0	229	6.0	0.429	4.3	LOS A	2.3	60.2	0.22	0.58	0.22	31.7
Approach		564	4.1	600	4.1	0.429	7.3	LOS A	2.3	60.2	0.42	0.67	0.42	31.3
North: SR 124														
7	L2	4	25.0	4	25.0	0.134	11.3	LOS B	0.6	14.9	0.45	0.61	0.45	34.2
4	T1	96	4.0	102	4.0	0.134	6.2	LOS A	0.6	14.9	0.45	0.61	0.45	35.2
14	R2	11	17.0	12	17.0	0.134	6.5	LOS A	0.6	14.9	0.45	0.61	0.45	34.0
Approach		111	6.0	118	6.0	0.134	6.4	LOS A	0.6	14.9	0.45	0.61	0.45	35.0
West: Gateway Road														
5	L2	90	4.0	96	4.0	0.141	7.7	LOS A	0.7	17.1	0.51	0.66	0.51	23.8
2	T1	15	2.0	16	2.0	0.141	3.7	LOS A	0.7	17.1	0.51	0.66	0.51	23.7
12	R2	7	2.0	7	2.0	0.141	4.2	LOS A	0.7	17.1	0.51	0.66	0.51	23.3
Approach		112	3.6	119	3.6	0.141	7.0	LOS A	0.7	17.1	0.51	0.66	0.51	23.8
All Vehicles		1185	3.5	1261	3.5	0.429	5.6	LOS A	2.3	60.2	0.41	0.56	0.41	28.1

Site Level of Service (LOS) Method: Delay & Degree of Saturation (SIDRA). Site LOS Method is specified in the Parameter Settings dialog (Site tab).
Roundabout LOS Method: Same as Signalised Intersections.
Vehicle movement LOS values are based on average delay and v/c ratio (degree of saturation) per movement.
Intersection and Approach LOS values are based on average delay for all movements (v/c not used).
Roundabout Capacity Model: SIDRA Standard.
Delay Model: SIDRA Standard (Geometric Delay is included).
Queue Model: HCM Queue Formula.
Gap-Acceptance Capacity: SIDRA Standard (Akçelik M3D).
HV (%) values are calculated for All Movement Classes of All Heavy Vehicle Model Designation.

Intersection	
Int Delay, s/veh	8

Movement	EBL	EBT	EBR	WBL	WBT	WBR	NBL	NBT	NBR	SBL	SBT	SBR
Lane Configurations												
Traffic Vol, veh/h	15	1	1	21	0	279	1	102	12	245	146	7
Future Vol, veh/h	15	1	1	21	0	279	1	102	12	245	146	7
Conflicting Peds, #/hr	0	0	0	0	0	0	0	0	0	0	0	0
Sign Control	Stop	Stop	Stop	Stop	Stop	Stop	Free	Free	Free	Free	Free	Free
RT Channelized	-	-	None	-	-	None	-	-	None	-	-	None
Storage Length	-	-	-	-	-	-	-	-	-	-	-	-
Veh in Median Storage, #	-	0	-	-	0	-	-	0	-	-	0	-
Grade, %	-	0	-	-	0	-	-	0	-	-	0	-
Peak Hour Factor	89	89	89	89	89	89	89	89	89	89	89	89
Heavy Vehicles, %	2	2	2	2	2	3	2	2	2	2	3	2
Mvmt Flow	17	1	1	24	0	313	1	115	13	275	164	8

Major/Minor	Minor2			Minor1			Major1			Major2		
Conflicting Flow All	998	848	168	843	846	122	172	0	0	128	0	0
Stage 1	718	718	-	124	124	-	-	-	-	-	-	-
Stage 2	280	130	-	719	722	-	-	-	-	-	-	-
Critical Hdwy	7.12	6.52	6.22	7.12	6.52	6.23	4.12	-	-	4.12	-	-
Critical Hdwy Stg 1	6.12	5.52	-	6.12	5.52	-	-	-	-	-	-	-
Critical Hdwy Stg 2	6.12	5.52	-	6.12	5.52	-	-	-	-	-	-	-
Follow-up Hdwy	3.518	4.018	3.318	3.518	4.018	3.327	2.218	-	-	2.218	-	-
Pot Cap-1 Maneuver	223	298	876	284	299	926	1405	-	-	1458	-	-
Stage 1	420	433	-	880	793	-	-	-	-	-	-	-
Stage 2	727	789	-	420	431	-	-	-	-	-	-	-
Platoon blocked, %								-	-		-	-
Mov Cap-1 Maneuver	124	235	876	237	236	926	1405	-	-	1458	-	-
Mov Cap-2 Maneuver	124	235	-	237	236	-	-	-	-	-	-	-
Stage 1	420	343	-	879	792	-	-	-	-	-	-	-
Stage 2	480	788	-	331	341	-	-	-	-	-	-	-

Approach	EB	WB	NB	SB
HCM Control Delay, s	36	13.3	0.1	5
HCM LOS	E	B		

Minor Lane/Major Mvmt	NBL	NBT	NBR	EBLn1	WBLn1	SBL	SBT	SBR
Capacity (veh/h)	1405	-	-	135	769	1458	-	-
HCM Lane V/C Ratio	0.001	-	-	0.141	0.438	0.189	-	-
HCM Control Delay (s)	7.6	0	-	36	13.3	8	0	-
HCM Lane LOS	A	A	-	E	B	A	A	-
HCM 95th %tile Q(veh)	0	-	-	0.5	2.2	0.7	-	-

Intersection	
Int Delay, s/veh	8.2

Movement	EBL	EBT	EBR	WBL	WBT	WBR	NBL	NBT	NBR	SBL	SBT	SBR
Lane Configurations												
Traffic Vol, veh/h	7	3	7	8	4	29	2	35	3	53	77	17
Future Vol, veh/h	7	3	7	8	4	29	2	35	3	53	77	17
Conflicting Peds, #/hr	0	0	0	0	0	0	0	0	0	0	0	0
Sign Control	Free	Free	Free	Free	Free	Free	Stop	Stop	Stop	Stop	Stop	Stop
RT Channelized	-	-	None	-	-	None	-	-	None	-	-	None
Storage Length	-	-	-	-	-	-	-	-	-	-	-	-
Veh in Median Storage, #	-	0	-	-	0	-	-	0	-	-	0	-
Grade, %	-	0	-	-	0	-	-	0	-	-	0	-
Peak Hour Factor	85	85	85	85	85	85	85	85	85	85	85	85
Heavy Vehicles, %	2	2	2	14	2	2	2	2	2	2	2	2
Mvmt Flow	8	4	8	9	5	34	2	41	4	62	91	20

Major/Minor	Major1			Major2			Minor1			Minor2		
Conflicting Flow All	39	0	0	12	0	0	120	81	8	87	68	22
Stage 1	-	-	-	-	-	-	24	24	-	40	40	-
Stage 2	-	-	-	-	-	-	96	57	-	47	28	-
Critical Hdwy	4.12	-	-	4.24	-	-	7.12	6.52	6.22	7.12	6.52	6.22
Critical Hdwy Stg 1	-	-	-	-	-	-	6.12	5.52	-	6.12	5.52	-
Critical Hdwy Stg 2	-	-	-	-	-	-	6.12	5.52	-	6.12	5.52	-
Follow-up Hdwy	2.218	-	-	2.326	-	-	3.518	4.018	3.318	3.518	4.018	3.318
Pot Cap-1 Maneuver	1571	-	-	1532	-	-	855	809	1074	899	823	1055
Stage 1	-	-	-	-	-	-	994	875	-	975	862	-
Stage 2	-	-	-	-	-	-	911	847	-	967	872	-
Platoon blocked, %		-	-		-	-						
Mov Cap-1 Maneuver	1571	-	-	1532	-	-	761	800	1074	854	814	1055
Mov Cap-2 Maneuver	-	-	-	-	-	-	761	800	-	854	814	-
Stage 1	-	-	-	-	-	-	989	871	-	970	857	-
Stage 2	-	-	-	-	-	-	794	842	-	914	868	-

Approach	EB	WB	NB	SB
HCM Control Delay, s	3	1.4	9.7	10.3
HCM LOS			A	B

Minor Lane/Major Mvmt	NBLn1	EBL	EBT	EBR	WBL	WBT	WBR	SBLn1
Capacity (veh/h)	813	1571	-	-	1532	-	-	851
HCM Lane V/C Ratio	0.058	0.005	-	-	0.006	-	-	0.203
HCM Control Delay (s)	9.7	7.3	0	-	7.4	0	-	10.3
HCM Lane LOS	A	A	A	-	A	A	-	B
HCM 95th %tile Q(veh)	0.2	0	-	-	0	-	-	0.8

Intersection	
Int Delay, s/veh	3.6

Movement	EBL	EBT	EBR	WBL	WBT	WBR	NBL	NBT	NBR	SBL	SBT	SBR
Lane Configurations												
Traffic Vol, veh/h	1	10	0	14	21	16	0	2	3	10	5	1
Future Vol, veh/h	1	10	0	14	21	16	0	2	3	10	5	1
Conflicting Peds, #/hr	0	0	0	0	0	0	0	0	0	0	0	0
Sign Control	Free	Free	Free	Free	Free	Free	Stop	Stop	Stop	Stop	Stop	Stop
RT Channelized	-	-	None	-	-	None	-	-	None	-	-	None
Storage Length	-	-	-	-	-	-	-	-	-	-	-	-
Veh in Median Storage, #	-	0	-	-	0	-	-	0	-	-	0	-
Grade, %	-	0	-	-	0	-	-	0	-	-	0	-
Peak Hour Factor	86	86	86	86	86	86	86	86	86	86	86	86
Heavy Vehicles, %	2	11	2	2	5	2	2	2	2	2	2	2
Mvmt Flow	1	12	0	16	24	19	0	2	3	12	6	1

Major/Minor	Major1			Major2			Minor1			Minor2		
Conflicting Flow All	43	0	0	12	0	0	83	89	12	83	80	34
Stage 1	-	-	-	-	-	-	14	14	-	66	66	-
Stage 2	-	-	-	-	-	-	69	75	-	17	14	-
Critical Hdwy	4.12	-	-	4.12	-	-	7.12	6.52	6.22	7.12	6.52	6.22
Critical Hdwy Stg 1	-	-	-	-	-	-	6.12	5.52	-	6.12	5.52	-
Critical Hdwy Stg 2	-	-	-	-	-	-	6.12	5.52	-	6.12	5.52	-
Follow-up Hdwy	2.218	-	-	2.218	-	-	3.518	4.018	3.318	3.518	4.018	3.318
Pot Cap-1 Maneuver	1566	-	-	1607	-	-	904	801	1069	904	810	1039
Stage 1	-	-	-	-	-	-	1006	884	-	945	840	-
Stage 2	-	-	-	-	-	-	941	833	-	1002	884	-
Platoon blocked, %		-	-		-	-						
Mov Cap-1 Maneuver	1566	-	-	1607	-	-	890	792	1069	891	801	1039
Mov Cap-2 Maneuver	-	-	-	-	-	-	890	792	-	891	801	-
Stage 1	-	-	-	-	-	-	1005	883	-	944	832	-
Stage 2	-	-	-	-	-	-	924	825	-	995	883	-

Approach	EB	WB	NB	SB
HCM Control Delay, s	0.7	2	8.9	9.2
HCM LOS			A	A

Minor Lane/Major Mvmt	NBLn1	EBL	EBT	EBR	WBL	WBT	WBR	SBLn1
Capacity (veh/h)	938	1566	-	-	1607	-	-	868
HCM Lane V/C Ratio	0.006	0.001	-	-	0.01	-	-	0.021
HCM Control Delay (s)	8.9	7.3	0	-	7.3	0	-	9.2
HCM Lane LOS	A	A	A	-	A	A	-	A
HCM 95th %tile Q(veh)	0	0	-	-	0	-	-	0.1

Intersection	
Int Delay, s/veh	0.7

Movement	EBL	EBT	EBR	WBL	WBT	WBR	NBL	NBT	NBR	SBL	SBT	SBR
Lane Configurations												
Traffic Vol, veh/h	14	2	7	3	0	4	7	1035	1	6	433	36
Future Vol, veh/h	14	2	7	3	0	4	7	1035	1	6	433	36
Conflicting Peds, #/hr	0	0	0	0	0	0	0	0	0	0	0	0
Sign Control	Stop	Stop	Stop	Stop	Stop	Stop	Free	Free	Free	Free	Free	Free
RT Channelized	-	-	Stop	-	-	Stop	-	-	None	-	-	None
Storage Length	-	-	-	-	-	-	610	-	600	565	-	550
Veh in Median Storage, #	-	0	-	-	0	-	-	0	-	-	0	-
Grade, %	-	0	-	-	0	-	-	0	-	-	0	-
Peak Hour Factor	79	79	79	79	79	79	79	79	79	79	79	79
Heavy Vehicles, %	2	2	2	2	2	2	14	6	2	17	19	6
Mvmt Flow	18	3	9	4	0	5	9	1310	1	8	548	46

Major/Minor	Minor2			Minor1			Major1			Major2		
Conflicting Flow All	1237	1893	274	1620	1938	655	594	0	0	1311	0	0
Stage 1	564	564	-	1328	1328	-	-	-	-	-	-	-
Stage 2	673	1329	-	292	610	-	-	-	-	-	-	-
Critical Hdwy	7.54	6.54	6.94	7.54	6.54	6.94	4.38	-	-	4.44	-	-
Critical Hdwy Stg 1	6.54	5.54	-	6.54	5.54	-	-	-	-	-	-	-
Critical Hdwy Stg 2	6.54	5.54	-	6.54	5.54	-	-	-	-	-	-	-
Follow-up Hdwy	3.52	4.02	3.32	3.52	4.02	3.32	2.34	-	-	2.37	-	-
Pot Cap-1 Maneuver	132	69	724	68	65	409	900	-	-	450	-	-
Stage 1	478	507	-	164	223	-	-	-	-	-	-	-
Stage 2	411	222	-	692	483	-	-	-	-	-	-	-
Platoon blocked, %								-	-		-	-
Mov Cap-1 Maneuver	128	67	724	64	63	409	900	-	-	450	-	-
Mov Cap-2 Maneuver	128	67	-	64	63	-	-	-	-	-	-	-
Stage 1	473	498	-	162	221	-	-	-	-	-	-	-
Stage 2	402	220	-	668	474	-	-	-	-	-	-	-

Approach	EB	WB	NB	SB
HCM Control Delay, s	31.4	30.7	0.1	0.2
HCM LOS	D	D		

Minor Lane/Major Mvmt	NBL	NBT	NBR	EBLn1	WBLn1	SBL	SBT	SBR
Capacity (veh/h)	900	-	-	165	149	450	-	-
HCM Lane V/C Ratio	0.01	-	-	0.176	0.059	0.017	-	-
HCM Control Delay (s)	9	-	-	31.4	30.7	13.1	-	-
HCM Lane LOS	A	-	-	D	D	B	-	-
HCM 95th %tile Q(veh)	0	-	-	0.6	0.2	0.1	-	-

MOVEMENT SUMMARY

Site: 1 [1. SR 124 / US Highway 12 Westbound Ramp (2025-AM-With-Project(Huntsman)) (Site Folder: 2025-AM-With-Project (Huntsman))]

SR 124 / US Highway 12 Westbound Ramp
Site Category: (None)
Roundabout

Vehicle Movement Performance

Mov ID	Turn	INPUT VOLUMES [Total veh/h	HV] %	DEMAND FLOWS [Total veh/h	HV] %	Deg. Satn v/c	Aver. Delay sec	Level of Service	95% BACK OF QUEUE [Veh. veh	Dist] ft	Prop. Que	Effective Stop Rate	Aver. No. Cycles	Aver. Speed mph
South: SR 124														
3u	U	1	2.0	1	2.0	0.397	11.0	LOS B	0.0	0.0	0.00	0.63	0.00	35.3
3	L2	386	9.0	465	9.0	0.397	9.1	LOS A	0.0	0.0	0.00	0.63	0.00	34.5
8	T1	192	8.0	231	8.0	0.397	4.8	LOS A	0.0	0.0	0.00	0.63	0.00	34.8
Approach		579	8.7	698	8.7	0.397	7.7	LOS A	0.0	0.0	0.00	0.63	0.00	34.6
East: US Highway 12 Westbound Ramp														
1	L2	69	9.0	83	9.0	0.146	13.5	LOS B	0.7	18.8	0.65	0.82	0.65	29.1
16	R2	6	17.0	7	17.0	0.146	9.9	LOS A	0.7	18.8	0.65	0.82	0.65	28.5
Approach		75	9.6	90	9.6	0.146	13.2	LOS B	0.7	18.8	0.65	0.82	0.65	29.1
North: SR 124														
4	T1	89	6.0	107	6.0	0.118	7.6	LOS A	0.6	15.6	0.57	0.66	0.57	34.8
14	R2	144	5.0	173	5.0	0.177	6.9	LOS A	0.9	22.6	0.53	0.68	0.53	34.5
Approach		233	5.4	281	5.4	0.177	7.2	LOS A	0.9	22.6	0.54	0.67	0.54	34.6
All Vehicles		887	7.9	1069	7.9	0.397	8.0	LOS A	0.9	22.6	0.20	0.66	0.20	34.1

Site Level of Service (LOS) Method: Delay & Degree of Saturation (SIDRA). Site LOS Method is specified in the Parameter Settings dialog (Site tab).
Roundabout LOS Method: Same as Signalised Intersections.
Vehicle movement LOS values are based on average delay and v/c ratio (degree of saturation) per movement.
Intersection and Approach LOS values are based on average delay for all movements (v/c not used).
Roundabout Capacity Model: SIDRA Standard.
Delay Model: SIDRA Standard (Geometric Delay is included).
Queue Model: HCM Queue Formula.
Gap-Acceptance Capacity: SIDRA Standard (Akçelik M3D).
HV (%) values are calculated for All Movement Classes of All Heavy Vehicle Model Designation.

MOVEMENT SUMMARY

Site: 1 [2. SR 124 and 5th Avenue / Gateway Road and US Highway 12 Eastbound Ramp (2025-AM-With-Project(Hunts (Site Folder: 2025-AM-With-Project(Huntsman))]

SR 124 and 5th Avenue / Gateway Road and US Highway 12 Eastbound Ramp
Site Category: (None)
Roundabout

Vehicle Movement Performance

Mov ID	Turn	INPUT VOLUMES [Total veh/h	HV] %	DEMAND FLOWS [Total veh/h	HV] %	Deg. Satn v/c	Aver. Delay sec	Level of Service	95% BACK OF QUEUE [Veh. veh	Dist] ft	Prop. Que	Effective Stop Rate	Aver. No. Cycles	Aver. Speed mph
South: 5th Avenue														
3	L2	7	2.0	8	2.0	0.439	6.3	LOS A	2.8	74.0	0.38	0.36	0.38	24.8
8	T1	361	3.0	425	3.0	0.439	2.3	LOS A	2.8	74.0	0.38	0.36	0.38	24.7
18	R2	26	33.0	31	33.0	0.439	4.5	LOS A	2.8	74.0	0.38	0.36	0.38	24.9
Approach		394	5.0	464	5.0	0.439	2.5	LOS A	2.8	74.0	0.38	0.36	0.38	24.7
East: US Highway 12 Westbound Ramp														
1	L2	325	2.0	382	2.0	0.492	10.9	LOS B	3.2	80.9	0.64	0.82	0.69	30.4
6	T1	78	2.0	92	2.0	0.492	6.6	LOS A	3.2	80.9	0.64	0.82	0.69	30.5
16	R2	153	10.0	180	10.0	0.492	4.1	LOS A	3.2	80.9	0.11	0.53	0.11	32.1
Approach		556	4.2	654	4.2	0.492	8.4	LOS A	3.2	80.9	0.50	0.74	0.53	30.9
North: SR 124														
7	L2	7	2.0	8	2.0	0.249	11.1	LOS B	1.2	32.5	0.57	0.71	0.57	34.7
4	T1	135	7.0	159	7.0	0.249	7.1	LOS A	1.2	32.5	0.57	0.71	0.57	34.7
14	R2	17	50.0	20	50.0	0.249	9.1	LOS A	1.2	32.5	0.57	0.71	0.57	32.5
Approach		159	11.4	187	11.4	0.249	7.5	LOS A	1.2	32.5	0.57	0.71	0.57	34.4
West: Gateway Road														
5	L2	65	20.0	76	20.0	0.159	9.5	LOS A	0.7	22.2	0.62	0.76	0.62	23.3
2	T1	6	100.0	7	100.0	0.159	10.2	LOS B	0.7	22.2	0.62	0.76	0.62	23.2
12	R2	6	17.0	7	17.0	0.159	5.8	LOS A	0.7	22.2	0.62	0.76	0.62	22.8
Approach		77	26.0	91	26.0	0.159	9.3	LOS A	0.7	22.2	0.62	0.76	0.62	23.2
All Vehicles		1186	6.8	1395	6.8	0.492	6.4	LOS A	3.2	80.9	0.47	0.61	0.49	28.3

Site Level of Service (LOS) Method: Delay & Degree of Saturation (SIDRA). Site LOS Method is specified in the Parameter Settings dialog (Site tab).
Roundabout LOS Method: Same as Signalised Intersections.
Vehicle movement LOS values are based on average delay and v/c ratio (degree of saturation) per movement.
Intersection and Approach LOS values are based on average delay for all movements (v/c not used).
Roundabout Capacity Model: SIDRA Standard.
Delay Model: SIDRA Standard (Geometric Delay is included).
Queue Model: HCM Queue Formula.
Gap-Acceptance Capacity: SIDRA Standard (Akçelik M3D).
HV (%) values are calculated for All Movement Classes of All Heavy Vehicle Model Designation.

Intersection	
Int Delay, s/veh	6.8

Movement	EBL	EBT	EBR	WBL	WBT	WBR	NBL	NBT	NBR	SBL	SBT	SBR
Lane Configurations												
Traffic Vol, veh/h	2	0	0	5	1	268	1	136	12	271	183	13
Future Vol, veh/h	2	0	0	5	1	268	1	136	12	271	183	13
Conflicting Peds, #/hr	0	0	0	0	0	0	0	0	0	0	0	0
Sign Control	Stop	Stop	Stop	Stop	Stop	Stop	Free	Free	Free	Free	Free	Free
RT Channelized	-	-	None	-	-	None	-	-	None	-	-	None
Storage Length	-	-	-	-	-	-	-	-	-	-	-	-
Veh in Median Storage, #	-	0	-	-	0	-	-	0	-	-	0	-
Grade, %	-	0	-	-	0	-	-	0	-	-	0	-
Peak Hour Factor	81	81	81	81	81	81	81	81	81	81	81	81
Heavy Vehicles, %	2	2	2	2	2	8	2	2	2	6	2	2
Mvmt Flow	2	0	0	6	1	331	1	168	15	335	226	16

Major/Minor	Minor2			Minor1			Major1			Major2		
Conflicting Flow All	1248	1089	234	1082	1090	176	242	0	0	183	0	0
Stage 1	904	904	-	178	178	-	-	-	-	-	-	-
Stage 2	344	185	-	904	912	-	-	-	-	-	-	-
Critical Hdwy	7.12	6.52	6.22	7.12	6.52	6.28	4.12	-	-	4.16	-	-
Critical Hdwy Stg 1	6.12	5.52	-	6.12	5.52	-	-	-	-	-	-	-
Critical Hdwy Stg 2	6.12	5.52	-	6.12	5.52	-	-	-	-	-	-	-
Follow-up Hdwy	3.518	4.018	3.318	3.518	4.018	3.372	2.218	-	-	2.254	-	-
Pot Cap-1 Maneuver	150	215	805	195	215	852	1324	-	-	1368	-	-
Stage 1	331	356	-	824	752	-	-	-	-	-	-	-
Stage 2	671	747	-	331	353	-	-	-	-	-	-	-
Platoon blocked, %								-	-		-	-
Mov Cap-1 Maneuver	71	154	805	152	154	852	1324	-	-	1368	-	-
Mov Cap-2 Maneuver	71	154	-	152	154	-	-	-	-	-	-	-
Stage 1	331	255	-	823	751	-	-	-	-	-	-	-
Stage 2	409	746	-	237	253	-	-	-	-	-	-	-

Approach	EB	WB	NB	SB
HCM Control Delay, s	57.5	13.2	0.1	4.9
HCM LOS	F	B		

Minor Lane/Major Mvmt	NBL	NBT	NBR	EBLn1	WBLn1	SBL	SBT	SBR
Capacity (veh/h)	1324	-	-	71	774	1368	-	-
HCM Lane V/C Ratio	0.001	-	-	0.035	0.437	0.245	-	-
HCM Control Delay (s)	7.7	0	-	57.5	13.2	8.5	0	-
HCM Lane LOS	A	A	-	F	B	A	A	-
HCM 95th %tile Q(veh)	0	-	-	0.1	2.2	1	-	-

Intersection	
Int Delay, s/veh	10.4

Movement	EBL	EBT	EBR	WBL	WBT	WBR	NBL	NBT	NBR	SBL	SBT	SBR
Lane Configurations												
Traffic Vol, veh/h	28	2	2	4	3	68	2	192	2	22	68	9
Future Vol, veh/h	28	2	2	4	3	68	2	192	2	22	68	9
Conflicting Peds, #/hr	0	0	0	0	0	0	0	0	0	0	0	0
Sign Control	Free	Free	Free	Free	Free	Free	Stop	Stop	Stop	Stop	Stop	Stop
RT Channelized	-	-	None	-	-	None	-	-	None	-	-	None
Storage Length	-	-	-	-	-	-	-	-	-	-	-	-
Veh in Median Storage, #	-	0	-	-	0	-	-	0	-	-	0	-
Grade, %	-	0	-	-	0	-	-	0	-	-	0	-
Peak Hour Factor	72	72	72	72	72	72	72	72	72	72	72	72
Heavy Vehicles, %	6	2	2	2	2	5	100	7	2	2	2	2
Mvmt Flow	39	3	3	6	4	94	3	267	3	31	94	13

Major/Minor	Major1			Major2			Minor1			Minor2		
Conflicting Flow All	98	0	0	6	0	0	200	193	5	281	147	51
Stage 1	-	-	-	-	-	-	83	83	-	63	63	-
Stage 2	-	-	-	-	-	-	117	110	-	218	84	-
Critical Hdwy	4.16	-	-	4.12	-	-	8.1	6.57	6.22	7.12	6.52	6.22
Critical Hdwy Stg 1	-	-	-	-	-	-	7.1	5.57	-	6.12	5.52	-
Critical Hdwy Stg 2	-	-	-	-	-	-	7.1	5.57	-	6.12	5.52	-
Follow-up Hdwy	2.254	-	-	2.218	-	-	4.4	4.063	3.318	3.518	4.018	3.318
Pot Cap-1 Maneuver	1470	-	-	1615	-	-	588	693	1078	671	744	1017
Stage 1	-	-	-	-	-	-	730	816	-	948	842	-
Stage 2	-	-	-	-	-	-	697	795	-	784	825	-
Platoon blocked, %		-	-		-	-						
Mov Cap-1 Maneuver	1470	-	-	1615	-	-	510	672	1078	452	721	1017
Mov Cap-2 Maneuver	-	-	-	-	-	-	510	672	-	452	721	-
Stage 1	-	-	-	-	-	-	710	794	-	922	839	-
Stage 2	-	-	-	-	-	-	608	792	-	505	803	-

Approach	EB	WB	NB	SB
HCM Control Delay, s	6.6	0.4	14	12
HCM LOS			B	B

Minor Lane/Major Mvmt	NBLn1	EBL	EBT	EBR	WBL	WBT	WBR	SBLn1
Capacity (veh/h)	672	1470	-	-	1615	-	-	652
HCM Lane V/C Ratio	0.405	0.026	-	-	0.003	-	-	0.211
HCM Control Delay (s)	14	7.5	0	-	7.2	0	-	12
HCM Lane LOS	B	A	A	-	A	A	-	B
HCM 95th %tile Q(veh)	2	0.1	-	-	0	-	-	0.8

Intersection	
Int Delay, s/veh	5.2

Movement	EBL	EBT	EBR	WBL	WBT	WBR	NBL	NBT	NBR	SBL	SBT	SBR
Lane Configurations												
Traffic Vol, veh/h	4	12	0	1	3	7	0	2	8	14	3	1
Future Vol, veh/h	4	12	0	1	3	7	0	2	8	14	3	1
Conflicting Peds, #/hr	0	0	0	0	0	0	0	0	0	0	0	0
Sign Control	Free	Free	Free	Free	Free	Free	Stop	Stop	Stop	Stop	Stop	Stop
RT Channelized	-	-	None	-	-	None	-	-	None	-	-	None
Storage Length	-	-	-	-	-	-	-	-	-	-	-	-
Veh in Median Storage, #	-	0	-	-	0	-	-	0	-	-	0	-
Grade, %	-	0	-	-	0	-	-	0	-	-	0	-
Peak Hour Factor	77	77	77	77	77	77	77	77	77	77	77	77
Heavy Vehicles, %	2	2	2	100	33	20	2	50	2	2	2	2
Mvmt Flow	5	16	0	1	4	9	0	3	10	18	4	1

Major/Minor	Major1			Major2			Minor1			Minor2		
Conflicting Flow All	13	0	0	16	0	0	39	41	16	44	37	9
Stage 1	-	-	-	-	-	-	26	26	-	11	11	-
Stage 2	-	-	-	-	-	-	13	15	-	33	26	-
Critical Hdwy	4.12	-	-	5.1	-	-	7.12	7	6.22	7.12	6.52	6.22
Critical Hdwy Stg 1	-	-	-	-	-	-	6.12	6	-	6.12	5.52	-
Critical Hdwy Stg 2	-	-	-	-	-	-	6.12	6	-	6.12	5.52	-
Follow-up Hdwy	2.218	-	-	3.1	-	-	3.518	4.45	3.318	3.518	4.018	3.318
Pot Cap-1 Maneuver	1606	-	-	1143	-	-	966	766	1063	958	855	1073
Stage 1	-	-	-	-	-	-	992	787	-	1010	886	-
Stage 2	-	-	-	-	-	-	1007	796	-	983	874	-
Platoon blocked, %		-	-		-	-						
Mov Cap-1 Maneuver	1606	-	-	1143	-	-	958	763	1063	944	852	1073
Mov Cap-2 Maneuver	-	-	-	-	-	-	958	763	-	944	852	-
Stage 1	-	-	-	-	-	-	989	785	-	1007	885	-
Stage 2	-	-	-	-	-	-	1000	795	-	967	871	-

Approach	EB	WB	NB	SB
HCM Control Delay, s	1.8	0.7	8.7	9
HCM LOS			A	A

Minor Lane/Major Mvmt	NBLn1	EBL	EBT	EBR	WBL	WBT	WBR	SBLn1
Capacity (veh/h)	986	1606	-	-	1143	-	-	933
HCM Lane V/C Ratio	0.013	0.003	-	-	0.001	-	-	0.025
HCM Control Delay (s)	8.7	7.2	0	-	8.2	0	-	9
HCM Lane LOS	A	A	A	-	A	A	-	A
HCM 95th %tile Q(veh)	0	0	-	-	0	-	-	0.1

Intersection	
Int Delay, s/veh	0.6

Movement	EBL	EBT	EBR	WBL	WBT	WBR	NBL	NBT	NBR	SBL	SBT	SBR
Lane Configurations												
Traffic Vol, veh/h	16	0	12	1	0	4	8	367	0	5	377	4
Future Vol, veh/h	16	0	12	1	0	4	8	367	0	5	377	4
Conflicting Peds, #/hr	0	0	0	0	0	0	0	0	0	0	0	0
Sign Control	Stop	Stop	Stop	Stop	Stop	Stop	Free	Free	Free	Free	Free	Free
RT Channelized	-	-	Stop	-	-	Stop	-	-	None	-	-	None
Storage Length	-	-	-	-	-	-	610	-	600	565	-	550
Veh in Median Storage, #	-	0	-	-	0	-	-	0	-	-	0	-
Grade, %	-	0	-	-	0	-	-	0	-	-	0	-
Peak Hour Factor	90	90	90	90	90	90	90	90	90	90	90	90
Heavy Vehicles, %	7	2	2	2	2	2	33	13	2	2	15	25
Mvmt Flow	18	0	13	1	0	4	9	408	0	6	419	4

Major/Minor	Minor2			Minor1			Major1			Major2		
Conflicting Flow All	653	857	210	648	861	204	423	0	0	408	0	0
Stage 1	431	431	-	426	426	-	-	-	-	-	-	-
Stage 2	222	426	-	222	435	-	-	-	-	-	-	-
Critical Hdwy	7.64	6.54	6.94	7.54	6.54	6.94	4.76	-	-	4.14	-	-
Critical Hdwy Stg 1	6.64	5.54	-	6.54	5.54	-	-	-	-	-	-	-
Critical Hdwy Stg 2	6.64	5.54	-	6.54	5.54	-	-	-	-	-	-	-
Follow-up Hdwy	3.57	4.02	3.32	3.52	4.02	3.32	2.53	-	-	2.22	-	-
Pot Cap-1 Maneuver	343	293	796	355	292	803	940	-	-	1147	-	-
Stage 1	560	581	-	577	584	-	-	-	-	-	-	-
Stage 2	746	584	-	760	579	-	-	-	-	-	-	-
Platoon blocked, %								-	-		-	-
Mov Cap-1 Maneuver	337	289	796	345	288	803	940	-	-	1147	-	-
Mov Cap-2 Maneuver	337	289	-	345	288	-	-	-	-	-	-	-
Stage 1	554	578	-	571	578	-	-	-	-	-	-	-
Stage 2	735	578	-	743	576	-	-	-	-	-	-	-

Approach	EB	WB	NB	SB
HCM Control Delay, s	11.4	8.6	0.2	0.1
HCM LOS	B	A		

Minor Lane/Major Mvmt	NBL	NBT	NBR	EBLn1	WBLn1	SBL	SBT	SBR
Capacity (veh/h)	940	-	-	590	1004	1147	-	-
HCM Lane V/C Ratio	0.009	-	-	0.053	0.006	0.005	-	-
HCM Control Delay (s)	8.9	-	-	11.4	8.6	8.2	-	-
HCM Lane LOS	A	-	-	B	A	A	-	-
HCM 95th %tile Q(veh)	0	-	-	0.2	0	0	-	-

Intersection	
Int Delay, s/veh	5.3

Movement	EBL	EBR	NBL	NBT	SBT	SBR
Lane Configurations						
Traffic Vol, veh/h	95	5	2	35	16	33
Future Vol, veh/h	95	5	2	35	16	33
Conflicting Peds, #/hr	0	0	0	0	0	0
Sign Control	Stop	Stop	Free	Free	Free	Free
RT Channelized	-	None	-	None	-	None
Storage Length	0	-	-	-	-	-
Veh in Median Storage, #	0	-	-	0	0	-
Grade, %	0	-	-	0	0	-
Peak Hour Factor	69	69	69	69	69	69
Heavy Vehicles, %	2	2	2	19	2	2
Mvmt Flow	138	7	3	51	23	48

Major/Minor	Minor2		Major1		Major2	
Conflicting Flow All	104	47	71	0	-	0
Stage 1	47	-	-	-	-	-
Stage 2	57	-	-	-	-	-
Critical Hdwy	6.42	6.22	4.12	-	-	-
Critical Hdwy Stg 1	5.42	-	-	-	-	-
Critical Hdwy Stg 2	5.42	-	-	-	-	-
Follow-up Hdwy	3.518	3.318	2.218	-	-	-
Pot Cap-1 Maneuver	894	1022	1529	-	-	-
Stage 1	975	-	-	-	-	-
Stage 2	966	-	-	-	-	-
Platoon blocked, %				-	-	-
Mov Cap-1 Maneuver	892	1022	1529	-	-	-
Mov Cap-2 Maneuver	892	-	-	-	-	-
Stage 1	973	-	-	-	-	-
Stage 2	966	-	-	-	-	-

Approach	EB	NB	SB
HCM Control Delay, s	9.8	0.4	0
HCM LOS	A		

Minor Lane/Major Mvmt	NBL	NBT	EBLn1	SBT	SBR
Capacity (veh/h)	1529	-	898	-	-
HCM Lane V/C Ratio	0.002	-	0.161	-	-
HCM Control Delay (s)	7.4	0	9.8	-	-
HCM Lane LOS	A	A	A	-	-
HCM 95th %tile Q(veh)	0	-	0.6	-	-

Intersection	
Int Delay, s/veh	2.9

Movement	EBL	EBR	NBL	NBT	SBT	SBR
Lane Configurations						
Traffic Vol, veh/h	18	1	0	19	15	6
Future Vol, veh/h	18	1	0	19	15	6
Conflicting Peds, #/hr	0	0	0	0	0	0
Sign Control	Stop	Stop	Free	Free	Free	Free
RT Channelized	-	None	-	None	-	None
Storage Length	0	-	-	-	-	-
Veh in Median Storage, #	0	-	-	0	0	-
Grade, %	0	-	-	0	0	-
Peak Hour Factor	69	69	69	69	69	69
Heavy Vehicles, %	2	2	2	16	2	2
Mvmt Flow	26	1	0	28	22	9

Major/Minor	Minor2		Major1		Major2	
Conflicting Flow All	55	27	31	0	-	0
Stage 1	27	-	-	-	-	-
Stage 2	28	-	-	-	-	-
Critical Hdwy	6.42	6.22	4.12	-	-	-
Critical Hdwy Stg 1	5.42	-	-	-	-	-
Critical Hdwy Stg 2	5.42	-	-	-	-	-
Follow-up Hdwy	3.518	3.318	2.218	-	-	-
Pot Cap-1 Maneuver	953	1048	1582	-	-	-
Stage 1	996	-	-	-	-	-
Stage 2	995	-	-	-	-	-
Platoon blocked, %				-	-	-
Mov Cap-1 Maneuver	953	1048	1582	-	-	-
Mov Cap-2 Maneuver	953	-	-	-	-	-
Stage 1	996	-	-	-	-	-
Stage 2	995	-	-	-	-	-

Approach	EB	NB	SB
HCM Control Delay, s	8.9	0	0
HCM LOS	A		

Minor Lane/Major Mvmt	NBL	NBT	EBLn1	SBT	SBR
Capacity (veh/h)	1582	-	958	-	-
HCM Lane V/C Ratio	-	-	0.029	-	-
HCM Control Delay (s)	0	-	8.9	-	-
HCM Lane LOS	A	-	A	-	-
HCM 95th %tile Q(veh)	0	-	0.1	-	-

MOVEMENT SUMMARY

Site: 1 [1. SR 124 / US Highway 12 Westbound Ramp (2025-PM-With-Project(Huntsman)) (Site Folder: 2025-PM-With-Project (Huntsman))]

SR 124 / US Highway 12 Westbound Ramp
Site Category: (None)
Roundabout

Vehicle Movement Performance

Mov ID	Turn	INPUT VOLUMES [Total veh/h	HV] %	DEMAND FLOWS [Total veh/h	HV] %	Deg. Satn v/c	Aver. Delay sec	Level of Service	95% BACK OF QUEUE [Veh. veh	Dist] ft	Prop. Que	Effective Stop Rate	Aver. No. Cycles	Aver. Speed mph
South: SR 124														
3u	U	3	6.0	3	6.0	0.440	11.1	LOS B	0.0	0.0	0.00	0.62	0.00	35.3
3	L2	427	4.0	497	4.0	0.440	9.1	LOS A	0.0	0.0	0.00	0.62	0.00	34.8
8	T1	271	2.0	315	2.0	0.440	4.8	LOS A	0.0	0.0	0.00	0.62	0.00	35.1
Approach		701	3.2	815	3.2	0.440	7.4	LOS A	0.0	0.0	0.00	0.62	0.00	34.9
East: US Highway 12 Westbound Ramp														
1	L2	57	11.0	66	11.0	0.126	14.6	LOS B	0.6	16.5	0.68	0.83	0.68	28.7
16	R2	5	2.0	6	2.0	0.126	9.5	LOS A	0.6	16.5	0.68	0.83	0.68	28.4
Approach		62	10.3	72	10.3	0.126	14.2	LOS B	0.6	16.5	0.68	0.83	0.68	28.7
North: SR 124														
4	T1	52	11.0	60	11.0	0.071	7.7	LOS A	0.3	9.2	0.55	0.63	0.55	34.7
14	R2	514	3.0	598	3.0	0.597	9.4	LOS A	5.1	130.5	0.73	0.87	0.88	33.2
Approach		566	3.7	658	3.7	0.597	9.3	LOS A	5.1	130.5	0.71	0.84	0.85	33.3
All Vehicles		1329	3.8	1545	3.8	0.597	8.5	LOS A	5.1	130.5	0.33	0.73	0.39	33.9

Site Level of Service (LOS) Method: Delay & Degree of Saturation (SIDRA). Site LOS Method is specified in the Parameter Settings dialog (Site tab).
Roundabout LOS Method: Same as Signalised Intersections.
Vehicle movement LOS values are based on average delay and v/c ratio (degree of saturation) per movement.
Intersection and Approach LOS values are based on average delay for all movements (v/c not used).
Roundabout Capacity Model: SIDRA Standard.
Delay Model: SIDRA Standard (Geometric Delay is included).
Queue Model: HCM Queue Formula.
Gap-Acceptance Capacity: SIDRA Standard (Akçelik M3D).
HV (%) values are calculated for All Movement Classes of All Heavy Vehicle Model Designation.

MOVEMENT SUMMARY

Site: 1 [2. SR 124 and 5th Avenue / Gateway Road and US Highway 12 Eastbound Ramp (2025-PM-With-Project(Hunts (Site Folder: 2025-PM-With-Project(Huntsman))]

SR 124 and 5th Avenue / Gateway Road and US Highway 12 Eastbound Ramp
Site Category: (None)
Roundabout

Vehicle Movement Performance

Mov ID	Turn	INPUT VOLUMES [Total veh/h	HV] %	DEMAND FLOWS [Total veh/h	HV] %	Deg. Satn v/c	Aver. Delay sec	Level of Service	95% BACK OF QUEUE [Veh. veh	Dist] ft	Prop. Que	Effective Stop Rate	Aver. No. Cycles	Aver. Speed mph
South: 5th Avenue														
3	L2	3	2.0	3	2.0	0.464	6.4	LOS A	3.1	79.6	0.40	0.37	0.40	24.7
8	T1	385	2.0	410	2.0	0.464	2.4	LOS A	3.1	79.6	0.40	0.37	0.40	24.6
18	R2	85	2.0	90	2.0	0.464	2.9	LOS A	3.1	79.6	0.40	0.37	0.40	24.2
Approach		473	2.0	503	2.0	0.464	2.5	LOS A	3.1	79.6	0.40	0.37	0.40	24.5
East: US Highway 12 Westbound Ramp														
1	L2	409	2.0	435	2.0	0.541	11.2	LOS B	3.8	97.6	0.66	0.84	0.74	30.3
6	T1	60	7.0	64	7.0	0.541	7.1	LOS A	3.8	97.6	0.66	0.84	0.74	30.3
16	R2	215	6.0	229	6.0	0.541	4.3	LOS A	3.8	97.6	0.17	0.57	0.19	31.9
Approach		684	3.7	728	3.7	0.541	8.7	LOS A	3.8	97.6	0.51	0.75	0.56	30.8
North: SR 124														
7	L2	4	25.0	4	25.0	0.160	12.1	LOS B	0.8	19.7	0.55	0.68	0.55	33.9
4	T1	103	4.0	110	4.0	0.160	6.9	LOS A	0.8	19.7	0.55	0.68	0.55	34.9
14	R2	11	17.0	12	17.0	0.160	7.3	LOS A	0.8	19.7	0.55	0.68	0.55	33.7
Approach		118	5.9	126	5.9	0.160	7.1	LOS A	0.8	19.7	0.55	0.68	0.55	34.7
West: Gateway Road														
5	L2	90	4.0	96	4.0	0.161	8.6	LOS A	0.8	21.2	0.61	0.73	0.61	23.6
2	T1	15	2.0	16	2.0	0.161	4.6	LOS A	0.8	21.2	0.61	0.73	0.61	23.5
12	R2	7	2.0	7	2.0	0.161	5.1	LOS A	0.8	21.2	0.61	0.73	0.61	23.1
Approach		112	3.6	119	3.6	0.161	7.9	LOS A	0.8	21.2	0.61	0.73	0.61	23.6
All Vehicles		1387	3.3	1476	3.3	0.541	6.4	LOS A	3.8	97.6	0.48	0.61	0.51	27.9

Site Level of Service (LOS) Method: Delay & Degree of Saturation (SIDRA). Site LOS Method is specified in the Parameter Settings dialog (Site tab).
Roundabout LOS Method: Same as Signalised Intersections.
Vehicle movement LOS values are based on average delay and v/c ratio (degree of saturation) per movement.
Intersection and Approach LOS values are based on average delay for all movements (v/c not used).
Roundabout Capacity Model: SIDRA Standard.
Delay Model: SIDRA Standard (Geometric Delay is included).
Queue Model: HCM Queue Formula.
Gap-Acceptance Capacity: SIDRA Standard (Akçelik M3D).
HV (%) values are calculated for All Movement Classes of All Heavy Vehicle Model Designation.

Intersection	
Int Delay, s/veh	10.9

Movement	EBL	EBT	EBR	WBL	WBT	WBR	NBL	NBT	NBR	SBL	SBT	SBR
Lane Configurations												
Traffic Vol, veh/h	15	1	1	21	0	354	1	102	12	372	146	7
Future Vol, veh/h	15	1	1	21	0	354	1	102	12	372	146	7
Conflicting Peds, #/hr	0	0	0	0	0	0	0	0	0	0	0	0
Sign Control	Stop	Stop	Stop	Stop	Stop	Stop	Free	Free	Free	Free	Free	Free
RT Channelized	-	-	None	-	-	None	-	-	None	-	-	None
Storage Length	-	-	-	-	-	-	-	-	-	-	-	-
Veh in Median Storage, #	-	0	-	-	0	-	-	0	-	-	0	-
Grade, %	-	0	-	-	0	-	-	0	-	-	0	-
Peak Hour Factor	89	89	89	89	89	89	89	89	89	89	89	89
Heavy Vehicles, %	2	2	2	2	2	3	2	2	2	2	3	2
Mvmt Flow	17	1	1	24	0	398	1	115	13	418	164	8

Major/Minor	Minor2			Minor1			Major1			Major2		
Conflicting Flow All	1327	1134	168	1129	1132	122	172	0	0	128	0	0
Stage 1	1004	1004	-	124	124	-	-	-	-	-	-	-
Stage 2	323	130	-	1005	1008	-	-	-	-	-	-	-
Critical Hdwy	7.12	6.52	6.22	7.12	6.52	6.23	4.12	-	-	4.12	-	-
Critical Hdwy Stg 1	6.12	5.52	-	6.12	5.52	-	-	-	-	-	-	-
Critical Hdwy Stg 2	6.12	5.52	-	6.12	5.52	-	-	-	-	-	-	-
Follow-up Hdwy	3.518	4.018	3.318	3.518	4.018	3.327	2.218	-	-	2.218	-	-
Pot Cap-1 Maneuver	132	203	876	181	203	926	1405	-	-	1458	-	-
Stage 1	291	320	-	880	793	-	-	-	-	-	-	-
Stage 2	689	789	-	291	318	-	-	-	-	-	-	-
Platoon blocked, %								-	-		-	-
Mov Cap-1 Maneuver	57	138	876	135	138	926	1405	-	-	1458	-	-
Mov Cap-2 Maneuver	57	138	-	135	138	-	-	-	-	-	-	-
Stage 1	291	219	-	879	792	-	-	-	-	-	-	-
Stage 2	393	788	-	197	217	-	-	-	-	-	-	-

Approach	EB	WB	NB	SB
HCM Control Delay, s	85.3	17.7	0.1	6
HCM LOS	F	C		

Minor Lane/Major Mvmt	NBL	NBT	NBR	EBLn1	WBLn1	SBL	SBT	SBR
Capacity (veh/h)	1405	-	-	63	697	1458	-	-
HCM Lane V/C Ratio	0.001	-	-	0.303	0.605	0.287	-	-
HCM Control Delay (s)	7.6	0	-	85.3	17.7	8.5	0	-
HCM Lane LOS	A	A	-	F	C	A	A	-
HCM 95th %tile Q(veh)	0	-	-	1.1	4.1	1.2	-	-

Intersection	
Int Delay, s/veh	10.6

Movement	EBL	EBT	EBR	WBL	WBT	WBR	NBL	NBT	NBR	SBL	SBT	SBR
Lane Configurations												
Traffic Vol, veh/h	7	3	7	8	4	29	2	114	3	53	211	17
Future Vol, veh/h	7	3	7	8	4	29	2	114	3	53	211	17
Conflicting Peds, #/hr	0	0	0	0	0	0	0	0	0	0	0	0
Sign Control	Free	Free	Free	Free	Free	Free	Stop	Stop	Stop	Stop	Stop	Stop
RT Channelized	-	-	None	-	-	None	-	-	None	-	-	None
Storage Length	-	-	-	-	-	-	-	-	-	-	-	-
Veh in Median Storage, #	-	0	-	-	0	-	-	0	-	-	0	-
Grade, %	-	0	-	-	0	-	-	0	-	-	0	-
Peak Hour Factor	85	85	85	85	85	85	85	85	85	85	85	85
Heavy Vehicles, %	2	2	2	14	2	2	2	2	2	2	2	2
Mvmt Flow	8	4	8	9	5	34	2	134	4	62	248	20

Major/Minor	Major1			Major2			Minor1			Minor2		
Conflicting Flow All	39	0	0	12	0	0	198	81	8	133	68	22
Stage 1	-	-	-	-	-	-	24	24	-	40	40	-
Stage 2	-	-	-	-	-	-	174	57	-	93	28	-
Critical Hdwy	4.12	-	-	4.24	-	-	7.12	6.52	6.22	7.12	6.52	6.22
Critical Hdwy Stg 1	-	-	-	-	-	-	6.12	5.52	-	6.12	5.52	-
Critical Hdwy Stg 2	-	-	-	-	-	-	6.12	5.52	-	6.12	5.52	-
Follow-up Hdwy	2.218	-	-	2.326	-	-	3.518	4.018	3.318	3.518	4.018	3.318
Pot Cap-1 Maneuver	1571	-	-	1532	-	-	761	809	1074	839	823	1055
Stage 1	-	-	-	-	-	-	994	875	-	975	862	-
Stage 2	-	-	-	-	-	-	828	847	-	914	872	-
Platoon blocked, %		-	-		-	-						
Mov Cap-1 Maneuver	1571	-	-	1532	-	-	565	800	1074	722	814	1055
Mov Cap-2 Maneuver	-	-	-	-	-	-	565	800	-	722	814	-
Stage 1	-	-	-	-	-	-	989	871	-	970	857	-
Stage 2	-	-	-	-	-	-	574	842	-	767	868	-

Approach	EB	WB	NB	SB
HCM Control Delay, s	3	1.4	10.5	12.5
HCM LOS			B	B

Minor Lane/Major Mvmt	NBLn1	EBL	EBT	EBR	WBL	WBT	WBR	SBLn1
Capacity (veh/h)	800	1571	-	-	1532	-	-	806
HCM Lane V/C Ratio	0.175	0.005	-	-	0.006	-	-	0.41
HCM Control Delay (s)	10.5	7.3	0	-	7.4	0	-	12.5
HCM Lane LOS	B	A	A	-	A	A	-	B
HCM 95th %tile Q(veh)	0.6	0	-	-	0	-	-	2

Intersection	
Int Delay, s/veh	3.6

Movement	EBL	EBT	EBR	WBL	WBT	WBR	NBL	NBT	NBR	SBL	SBT	SBR
Lane Configurations												
Traffic Vol, veh/h	1	10	0	14	21	23	0	2	3	14	5	1
Future Vol, veh/h	1	10	0	14	21	23	0	2	3	14	5	1
Conflicting Peds, #/hr	0	0	0	0	0	0	0	0	0	0	0	0
Sign Control	Free	Free	Free	Free	Free	Free	Stop	Stop	Stop	Stop	Stop	Stop
RT Channelized	-	-	None	-	-	None	-	-	None	-	-	None
Storage Length	-	-	-	-	-	-	-	-	-	-	-	-
Veh in Median Storage, #	-	0	-	-	0	-	-	0	-	-	0	-
Grade, %	-	0	-	-	0	-	-	0	-	-	0	-
Peak Hour Factor	86	86	86	86	86	86	86	86	86	86	86	86
Heavy Vehicles, %	2	11	2	2	5	2	2	2	2	2	2	2
Mvmt Flow	1	12	0	16	24	27	0	2	3	16	6	1

Major/Minor	Major1			Major2			Minor1			Minor2		
Conflicting Flow All	51	0	0	12	0	0	87	97	12	87	84	38
Stage 1	-	-	-	-	-	-	14	14	-	70	70	-
Stage 2	-	-	-	-	-	-	73	83	-	17	14	-
Critical Hdwy	4.12	-	-	4.12	-	-	7.12	6.52	6.22	7.12	6.52	6.22
Critical Hdwy Stg 1	-	-	-	-	-	-	6.12	5.52	-	6.12	5.52	-
Critical Hdwy Stg 2	-	-	-	-	-	-	6.12	5.52	-	6.12	5.52	-
Follow-up Hdwy	2.218	-	-	2.218	-	-	3.518	4.018	3.318	3.518	4.018	3.318
Pot Cap-1 Maneuver	1555	-	-	1607	-	-	899	793	1069	899	806	1034
Stage 1	-	-	-	-	-	-	1006	884	-	940	837	-
Stage 2	-	-	-	-	-	-	937	826	-	1002	884	-
Platoon blocked, %		-	-		-	-						
Mov Cap-1 Maneuver	1555	-	-	1607	-	-	886	784	1069	886	797	1034
Mov Cap-2 Maneuver	-	-	-	-	-	-	886	784	-	886	797	-
Stage 1	-	-	-	-	-	-	1005	883	-	939	829	-
Stage 2	-	-	-	-	-	-	920	818	-	995	883	-

Approach	EB	WB	NB	SB
HCM Control Delay, s	0.7	1.8	8.9	9.3
HCM LOS			A	A

Minor Lane/Major Mvmt	NBLn1	EBL	EBT	EBR	WBL	WBT	WBR	SBLn1
Capacity (veh/h)	933	1555	-	-	1607	-	-	868
HCM Lane V/C Ratio	0.006	0.001	-	-	0.01	-	-	0.027
HCM Control Delay (s)	8.9	7.3	0	-	7.3	0	-	9.3
HCM Lane LOS	A	A	A	-	A	A	-	A
HCM 95th %tile Q(veh)	0	0	-	-	0	-	-	0.1

Intersection	
Int Delay, s/veh	0.8

Movement	EBL	EBT	EBR	WBL	WBT	WBR	NBL	NBT	NBR	SBL	SBT	SBR
Lane Configurations												
Traffic Vol, veh/h	14	2	11	3	0	4	14	1035	1	6	433	36
Future Vol, veh/h	14	2	11	3	0	4	14	1035	1	6	433	36
Conflicting Peds, #/hr	0	0	0	0	0	0	0	0	0	0	0	0
Sign Control	Stop	Stop	Stop	Stop	Stop	Stop	Free	Free	Free	Free	Free	Free
RT Channelized	-	-	Stop	-	-	Stop	-	-	None	-	-	None
Storage Length	-	-	-	-	-	-	610	-	600	565	-	550
Veh in Median Storage, #	-	0	-	-	0	-	-	0	-	-	0	-
Grade, %	-	0	-	-	0	-	-	0	-	-	0	-
Peak Hour Factor	79	79	79	79	79	79	79	79	79	79	79	79
Heavy Vehicles, %	2	2	2	2	2	2	14	6	2	17	19	6
Mvmt Flow	18	3	14	4	0	5	18	1310	1	8	548	46

Major/Minor	Minor2			Minor1			Major1			Major2		
Conflicting Flow All	1255	1911	274	1638	1956	655	594	0	0	1311	0	0
Stage 1	564	564	-	1346	1346	-	-	-	-	-	-	-
Stage 2	691	1347	-	292	610	-	-	-	-	-	-	-
Critical Hdwy	7.54	6.54	6.94	7.54	6.54	6.94	4.38	-	-	4.44	-	-
Critical Hdwy Stg 1	6.54	5.54	-	6.54	5.54	-	-	-	-	-	-	-
Critical Hdwy Stg 2	6.54	5.54	-	6.54	5.54	-	-	-	-	-	-	-
Follow-up Hdwy	3.52	4.02	3.32	3.52	4.02	3.32	2.34	-	-	2.37	-	-
Pot Cap-1 Maneuver	128	67	724	66	63	409	900	-	-	450	-	-
Stage 1	478	507	-	159	218	-	-	-	-	-	-	-
Stage 2	401	218	-	692	483	-	-	-	-	-	-	-
Platoon blocked, %								-	-		-	-
Mov Cap-1 Maneuver	123	64	724	61	61	409	900	-	-	450	-	-
Mov Cap-2 Maneuver	123	64	-	61	61	-	-	-	-	-	-	-
Stage 1	468	498	-	156	214	-	-	-	-	-	-	-
Stage 2	388	214	-	663	474	-	-	-	-	-	-	-

Approach	EB	WB	NB	SB
HCM Control Delay, s	28.7	32	0.1	0.2
HCM LOS	D	D		

Minor Lane/Major Mvmt	NBL	NBT	NBR	EBLn1	WBLn1	SBL	SBT	SBR
Capacity (veh/h)	900	-	-	186	142	450	-	-
HCM Lane V/C Ratio	0.02	-	-	0.184	0.062	0.017	-	-
HCM Control Delay (s)	9.1	-	-	28.7	32	13.1	-	-
HCM Lane LOS	A	-	-	D	D	B	-	-
HCM 95th %tile Q(veh)	0.1	-	-	0.7	0.2	0.1	-	-

Intersection	
Int Delay, s/veh	3.1

Movement	EBL	EBR	NBL	NBT	SBT	SBR
Lane Configurations						
Traffic Vol, veh/h	66	3	6	25	35	112
Future Vol, veh/h	66	3	6	25	35	112
Conflicting Peds, #/hr	0	0	0	0	0	0
Sign Control	Stop	Stop	Free	Free	Free	Free
RT Channelized	-	None	-	None	-	None
Storage Length	0	-	-	-	-	-
Veh in Median Storage, #	0	-	-	0	0	-
Grade, %	0	-	-	0	0	-
Peak Hour Factor	64	64	64	64	64	64
Heavy Vehicles, %	2	2	2	2	2	2
Mvmt Flow	103	5	9	39	55	175

Major/Minor	Minor2		Major1		Major2	
Conflicting Flow All	200	143	230	0	-	0
Stage 1	143	-	-	-	-	-
Stage 2	57	-	-	-	-	-
Critical Hdwy	6.42	6.22	4.12	-	-	-
Critical Hdwy Stg 1	5.42	-	-	-	-	-
Critical Hdwy Stg 2	5.42	-	-	-	-	-
Follow-up Hdwy	3.518	3.318	2.218	-	-	-
Pot Cap-1 Maneuver	789	905	1338	-	-	-
Stage 1	884	-	-	-	-	-
Stage 2	966	-	-	-	-	-
Platoon blocked, %				-	-	-
Mov Cap-1 Maneuver	783	905	1338	-	-	-
Mov Cap-2 Maneuver	783	-	-	-	-	-
Stage 1	878	-	-	-	-	-
Stage 2	966	-	-	-	-	-

Approach	EB	NB	SB
HCM Control Delay, s	10.3	1.5	0
HCM LOS	B		

Minor Lane/Major Mvmt	NBL	NBT	EBLn1	SBT	SBR
Capacity (veh/h)	1338	-	788	-	-
HCM Lane V/C Ratio	0.007	-	0.137	-	-
HCM Control Delay (s)	7.7	0	10.3	-	-
HCM Lane LOS	A	A	B	-	-
HCM 95th %tile Q(veh)	0	-	0.5	-	-

Intersection	
Int Delay, s/veh	1.9

Movement	EBL	EBR	NBL	NBT	SBT	SBR
Lane Configurations						
Traffic Vol, veh/h	13	1	1	18	16	22
Future Vol, veh/h	13	1	1	18	16	22
Conflicting Peds, #/hr	0	0	0	0	0	0
Sign Control	Stop	Stop	Free	Free	Free	Free
RT Channelized	-	None	-	None	-	None
Storage Length	0	-	-	-	-	-
Veh in Median Storage, #	0	-	-	0	0	-
Grade, %	0	-	-	0	0	-
Peak Hour Factor	64	64	64	64	64	64
Heavy Vehicles, %	2	2	2	2	2	2
Mvmt Flow	20	2	2	28	25	34

Major/Minor	Minor2		Major1		Major2	
Conflicting Flow All	74	42	59	0	-	0
Stage 1	42	-	-	-	-	-
Stage 2	32	-	-	-	-	-
Critical Hdwy	6.42	6.22	4.12	-	-	-
Critical Hdwy Stg 1	5.42	-	-	-	-	-
Critical Hdwy Stg 2	5.42	-	-	-	-	-
Follow-up Hdwy	3.518	3.318	2.218	-	-	-
Pot Cap-1 Maneuver	930	1029	1545	-	-	-
Stage 1	980	-	-	-	-	-
Stage 2	991	-	-	-	-	-
Platoon blocked, %				-	-	-
Mov Cap-1 Maneuver	929	1029	1545	-	-	-
Mov Cap-2 Maneuver	929	-	-	-	-	-
Stage 1	979	-	-	-	-	-
Stage 2	991	-	-	-	-	-

Approach	EB	NB	SB
HCM Control Delay, s	8.9	0.4	0
HCM LOS	A		

Minor Lane/Major Mvmt	NBL	NBT	EBLn1	SBT	SBR
Capacity (veh/h)	1545	-	935	-	-
HCM Lane V/C Ratio	0.001	-	0.023	-	-
HCM Control Delay (s)	7.3	0	8.9	-	-
HCM Lane LOS	A	A	A	-	-
HCM 95th %tile Q(veh)	0	-	0.1	-	-

MOVEMENT SUMMARY

Site: 1 [1. SR 124 / US Highway 12 Westbound Ramp (2025-AM-With_Both_Projects) (Site Folder: 2025-AM-With_Both_Projects)]

SR 124 / US Highway 12 Westbound Ramp
Site Category: (None)
Roundabout

Vehicle Movement Performance

Mov ID	Turn	INPUT VOLUMES [Total veh/h	HV] %	DEMAND FLOWS [Total veh/h	HV] %	Deg. Satn v/c	Aver. Delay sec	Level of Service	95% BACK OF QUEUE [Veh. veh	Dist] ft	Prop. Que	Effective Stop Rate	Aver. No. Cycles	Aver. Speed mph
South: SR 124														
3u	U	1	2.0	1	2.0	0.463	11.0	LOS B	0.0	0.0	0.00	0.64	0.00	35.2
3	L2	477	9.0	575	9.0	0.463	9.2	LOS A	0.0	0.0	0.00	0.64	0.00	34.4
8	T1	197	8.0	237	8.0	0.463	4.9	LOS A	0.0	0.0	0.00	0.64	0.00	34.7
Approach		675	8.7	813	8.7	0.463	7.9	LOS A	0.0	0.0	0.00	0.64	0.00	34.5
East: US Highway 12 Westbound Ramp														
1	L2	69	9.0	83	9.0	0.162	15.1	LOS B	0.8	21.9	0.71	0.86	0.71	28.5
16	R2	6	17.0	7	17.0	0.162	11.7	LOS B	0.8	21.9	0.71	0.86	0.71	27.9
Approach		75	9.6	90	9.6	0.162	14.9	LOS B	0.8	21.9	0.71	0.86	0.71	28.4
North: SR 124														
4	T1	91	6.0	110	6.0	0.132	8.5	LOS A	0.7	18.2	0.63	0.70	0.63	34.4
14	R2	144	5.0	173	5.0	0.191	7.7	LOS A	1.0	25.5	0.59	0.72	0.59	34.0
Approach		235	5.4	283	5.4	0.191	8.0	LOS A	1.0	25.5	0.61	0.71	0.61	34.2
All Vehicles		985	8.0	1187	8.0	0.463	8.5	LOS A	1.0	25.5	0.20	0.67	0.20	33.9

Site Level of Service (LOS) Method: Delay & Degree of Saturation (SIDRA). Site LOS Method is specified in the Parameter Settings dialog (Site tab).
Roundabout LOS Method: Same as Signalised Intersections.
Vehicle movement LOS values are based on average delay and v/c ratio (degree of saturation) per movement.
Intersection and Approach LOS values are based on average delay for all movements (v/c not used).
Roundabout Capacity Model: SIDRA Standard.
Delay Model: SIDRA Standard (Geometric Delay is included).
Queue Model: HCM Queue Formula.
Gap-Acceptance Capacity: SIDRA Standard (Akçelik M3D).
HV (%) values are calculated for All Movement Classes of All Heavy Vehicle Model Designation.

MOVEMENT SUMMARY

Site: 1 [2. SR 124 and 5th Avenue / Gateway Road and US Highway 12 Eastbound Ramp (2025-AM-With_Both_Projects (Site Folder: 2025-AM-With_Both_Projects)]

SR 124 and 5th Avenue / Gateway Road and US Highway 12 Eastbound Ramp
Site Category: (None)
Roundabout

Vehicle Movement Performance

Mov ID	Turn	INPUT VOLUMES [Total veh/h	HV] %	DEMAND FLOWS [Total veh/h	HV] %	Deg. Satn v/c	Aver. Delay sec	Level of Service	95% BACK OF QUEUE [Veh. veh	Dist] ft	Prop. Que	Effective Stop Rate	Aver. No. Cycles	Aver. Speed mph
South: 5th Avenue														
3	L2	7	2.0	8	2.0	0.544	6.5	LOS A	4.1	107.1	0.44	0.38	0.44	24.7
8	T1	457	3.0	538	3.0	0.544	2.5	LOS A	4.1	107.1	0.44	0.38	0.44	24.6
18	R2	26	33.0	31	33.0	0.544	4.7	LOS A	4.1	107.1	0.44	0.38	0.44	24.8
Approach		490	4.6	576	4.6	0.544	2.7	LOS A	4.1	107.1	0.44	0.38	0.44	24.6
East: US Highway 12 Westbound Ramp														
1	L2	357	2.0	420	2.0	0.557	12.5	LOS B	4.4	111.4	0.76	0.93	0.89	29.7
6	T1	78	2.0	92	2.0	0.557	8.3	LOS A	4.4	111.4	0.76	0.93	0.89	29.8
16	R2	153	10.0	180	10.0	0.557	3.8	LOS A	4.4	111.4	0.04	0.50	0.05	32.4
Approach		588	4.1	692	4.1	0.557	9.7	LOS A	4.4	111.4	0.57	0.82	0.67	30.4
North: SR 124														
7	L2	7	2.0	8	2.0	0.265	11.3	LOS B	1.3	36.3	0.61	0.74	0.61	34.5
4	T1	137	7.0	161	7.0	0.265	7.3	LOS A	1.3	36.3	0.61	0.74	0.61	34.6
14	R2	17	50.0	20	50.0	0.265	9.5	LOS A	1.3	36.3	0.61	0.74	0.61	32.4
Approach		161	11.3	189	11.3	0.265	7.7	LOS A	1.3	36.3	0.61	0.74	0.61	34.3
West: Gateway Road														
5	L2	65	20.0	76	20.0	0.168	9.9	LOS A	0.8	24.3	0.65	0.79	0.65	23.2
2	T1	6	100.0	7	100.0	0.168	11.0	LOS B	0.8	24.3	0.65	0.79	0.65	23.1
12	R2	6	17.0	7	17.0	0.168	6.2	LOS A	0.8	24.3	0.65	0.79	0.65	22.7
Approach		77	26.0	91	26.0	0.168	9.7	LOS A	0.8	24.3	0.65	0.79	0.65	23.1
All Vehicles		1316	6.4	1548	6.4	0.557	6.8	LOS A	4.4	111.4	0.53	0.64	0.58	27.8

Site Level of Service (LOS) Method: Delay & Degree of Saturation (SIDRA). Site LOS Method is specified in the Parameter Settings dialog (Site tab).
Roundabout LOS Method: Same as Signalised Intersections.
Vehicle movement LOS values are based on average delay and v/c ratio (degree of saturation) per movement.
Intersection and Approach LOS values are based on average delay for all movements (v/c not used).
Roundabout Capacity Model: SIDRA Standard.
Delay Model: SIDRA Standard (Geometric Delay is included).
Queue Model: HCM Queue Formula.
Gap-Acceptance Capacity: SIDRA Standard (Akçelik M3D).
HV (%) values are calculated for All Movement Classes of All Heavy Vehicle Model Designation.

Intersection	
Int Delay, s/veh	8.6

Movement	EBL	EBT	EBR	WBL	WBT	WBR	NBL	NBT	NBR	SBL	SBT	SBR
Lane Configurations												
Traffic Vol, veh/h	2	0	0	5	1	364	1	136	12	305	183	13
Future Vol, veh/h	2	0	0	5	1	364	1	136	12	305	183	13
Conflicting Peds, #/hr	0	0	0	0	0	0	0	0	0	0	0	0
Sign Control	Stop	Stop	Stop	Stop	Stop	Stop	Free	Free	Free	Free	Free	Free
RT Channelized	-	-	None	-	-	None	-	-	None	-	-	None
Storage Length	-	-	-	-	-	-	-	-	-	-	-	-
Veh in Median Storage, #	-	0	-	-	0	-	-	0	-	-	0	-
Grade, %	-	0	-	-	0	-	-	0	-	-	0	-
Peak Hour Factor	81	81	81	81	81	81	81	81	81	81	81	81
Heavy Vehicles, %	2	2	2	2	2	8	2	2	2	6	2	2
Mvmt Flow	2	0	0	6	1	449	1	168	15	377	226	16

Major/Minor	Minor2			Minor1			Major1			Major2		
Conflicting Flow All	1391	1173	234	1166	1174	176	242	0	0	183	0	0
Stage 1	988	988	-	178	178	-	-	-	-	-	-	-
Stage 2	403	185	-	988	996	-	-	-	-	-	-	-
Critical Hdwy	7.12	6.52	6.22	7.12	6.52	6.28	4.12	-	-	4.16	-	-
Critical Hdwy Stg 1	6.12	5.52	-	6.12	5.52	-	-	-	-	-	-	-
Critical Hdwy Stg 2	6.12	5.52	-	6.12	5.52	-	-	-	-	-	-	-
Follow-up Hdwy	3.518	4.018	3.318	3.518	4.018	3.372	2.218	-	-	2.254	-	-
Pot Cap-1 Maneuver	120	192	805	171	192	852	1324	-	-	1368	-	-
Stage 1	297	325	-	824	752	-	-	-	-	-	-	-
Stage 2	624	747	-	297	322	-	-	-	-	-	-	-
Platoon blocked, %								-	-		-	-
Mov Cap-1 Maneuver	42	131	805	129	131	852	1324	-	-	1368	-	-
Mov Cap-2 Maneuver	42	131	-	129	131	-	-	-	-	-	-	-
Stage 1	297	221	-	823	751	-	-	-	-	-	-	-
Stage 2	294	746	-	202	219	-	-	-	-	-	-	-

Approach	EB	WB	NB	SB
HCM Control Delay, s	96	15.9	0.1	5.3
HCM LOS	F	C		

Minor Lane/Major Mvmt	NBL	NBT	NBR	EBLn1	WBLn1	SBL	SBT	SBR
Capacity (veh/h)	1324	-	-	42	781	1368	-	-
HCM Lane V/C Ratio	0.001	-	-	0.059	0.585	0.275	-	-
HCM Control Delay (s)	7.7	0	-	96	15.9	8.6	0	-
HCM Lane LOS	A	A	-	F	C	A	A	-
HCM 95th %tile Q(veh)	0	-	-	0.2	3.9	1.1	-	-

Intersection	
Int Delay, s/veh	14.1

Movement	EBL	EBT	EBR	WBL	WBT	WBR	NBL	NBT	NBR	SBL	SBT	SBR
Lane Configurations												
Traffic Vol, veh/h	28	2	2	4	3	68	2	294	2	22	104	9
Future Vol, veh/h	28	2	2	4	3	68	2	294	2	22	104	9
Conflicting Peds, #/hr	0	0	0	0	0	0	0	0	0	0	0	0
Sign Control	Free	Free	Free	Free	Free	Free	Stop	Stop	Stop	Stop	Stop	Stop
RT Channelized	-	-	None	-	-	None	-	-	None	-	-	None
Storage Length	-	-	-	-	-	-	-	-	-	-	-	-
Veh in Median Storage, #	-	0	-	-	0	-	-	0	-	-	0	-
Grade, %	-	0	-	-	0	-	-	0	-	-	0	-
Peak Hour Factor	72	72	72	72	72	72	72	72	72	72	72	72
Heavy Vehicles, %	6	2	2	2	2	5	100	7	2	2	2	2
Mvmt Flow	39	3	3	6	4	94	3	408	3	31	144	13

Major/Minor	Major1			Major2			Minor1			Minor2		
Conflicting Flow All	98	0	0	6	0	0	225	193	5	351	147	51
Stage 1	-	-	-	-	-	-	83	83	-	63	63	-
Stage 2	-	-	-	-	-	-	142	110	-	288	84	-
Critical Hdwy	4.16	-	-	4.12	-	-	8.1	6.57	6.22	7.12	6.52	6.22
Critical Hdwy Stg 1	-	-	-	-	-	-	7.1	5.57	-	6.12	5.52	-
Critical Hdwy Stg 2	-	-	-	-	-	-	7.1	5.57	-	6.12	5.52	-
Follow-up Hdwy	2.254	-	-	2.218	-	-	4.4	4.063	3.318	3.518	4.018	3.318
Pot Cap-1 Maneuver	1470	-	-	1615	-	-	564	693	1078	604	744	1017
Stage 1	-	-	-	-	-	-	730	816	-	948	842	-
Stage 2	-	-	-	-	-	-	674	795	-	720	825	-
Platoon blocked, %		-	-		-	-						
Mov Cap-1 Maneuver	1470	-	-	1615	-	-	460	672	1078	304	721	1017
Mov Cap-2 Maneuver	-	-	-	-	-	-	460	672	-	304	721	-
Stage 1	-	-	-	-	-	-	710	794	-	922	839	-
Stage 2	-	-	-	-	-	-	549	792	-	339	803	-

Approach	EB	WB	NB	SB
HCM Control Delay, s	6.6	0.4	18.6	13.7
HCM LOS			C	B

Minor Lane/Major Mvmt	NBLn1	EBL	EBT	EBR	WBL	WBT	WBR	SBLn1
Capacity (veh/h)	672	1470	-	-	1615	-	-	599
HCM Lane V/C Ratio	0.616	0.026	-	-	0.003	-	-	0.313
HCM Control Delay (s)	18.6	7.5	0	-	7.2	0	-	13.7
HCM Lane LOS	C	A	A	-	A	A	-	B
HCM 95th %tile Q(veh)	4.3	0.1	-	-	0	-	-	1.3

Intersection	
Int Delay, s/veh	5.3

Movement	EBL	EBT	EBR	WBL	WBT	WBR	NBL	NBT	NBR	SBL	SBT	SBR
Lane Configurations												
Traffic Vol, veh/h	4	12	0	1	3	9	0	2	8	19	3	1
Future Vol, veh/h	4	12	0	1	3	9	0	2	8	19	3	1
Conflicting Peds, #/hr	0	0	0	0	0	0	0	0	0	0	0	0
Sign Control	Free	Free	Free	Free	Free	Free	Stop	Stop	Stop	Stop	Stop	Stop
RT Channelized	-	-	None	-	-	None	-	-	None	-	-	None
Storage Length	-	-	-	-	-	-	-	-	-	-	-	-
Veh in Median Storage, #	-	0	-	-	0	-	-	0	-	-	0	-
Grade, %	-	0	-	-	0	-	-	0	-	-	0	-
Peak Hour Factor	77	77	77	77	77	77	77	77	77	77	77	77
Heavy Vehicles, %	2	2	2	100	33	20	2	50	2	2	2	2
Mvmt Flow	5	16	0	1	4	12	0	3	10	25	4	1

Major/Minor	Major1			Major2			Minor1			Minor2		
Conflicting Flow All	16	0	0	16	0	0	41	44	16	45	38	10
Stage 1	-	-	-	-	-	-	26	26	-	12	12	-
Stage 2	-	-	-	-	-	-	15	18	-	33	26	-
Critical Hdwy	4.12	-	-	5.1	-	-	7.12	7	6.22	7.12	6.52	6.22
Critical Hdwy Stg 1	-	-	-	-	-	-	6.12	6	-	6.12	5.52	-
Critical Hdwy Stg 2	-	-	-	-	-	-	6.12	6	-	6.12	5.52	-
Follow-up Hdwy	2.218	-	-	3.1	-	-	3.518	4.45	3.318	3.518	4.018	3.318
Pot Cap-1 Maneuver	1602	-	-	1143	-	-	963	763	1063	957	854	1071
Stage 1	-	-	-	-	-	-	992	787	-	1009	886	-
Stage 2	-	-	-	-	-	-	1005	794	-	983	874	-
Platoon blocked, %		-	-		-	-						
Mov Cap-1 Maneuver	1602	-	-	1143	-	-	955	760	1063	943	851	1071
Mov Cap-2 Maneuver	-	-	-	-	-	-	955	760	-	943	851	-
Stage 1	-	-	-	-	-	-	989	785	-	1006	885	-
Stage 2	-	-	-	-	-	-	998	793	-	967	871	-

Approach	EB	WB	NB	SB
HCM Control Delay, s	1.8	0.6	8.7	9
HCM LOS			A	A

Minor Lane/Major Mvmt	NBLn1	EBL	EBT	EBR	WBL	WBT	WBR	SBLn1
Capacity (veh/h)	984	1602	-	-	1143	-	-	935
HCM Lane V/C Ratio	0.013	0.003	-	-	0.001	-	-	0.032
HCM Control Delay (s)	8.7	7.3	0	-	8.2	0	-	9
HCM Lane LOS	A	A	A	-	A	A	-	A
HCM 95th %tile Q(veh)	0	0	-	-	0	-	-	0.1

Intersection	
Int Delay, s/veh	0.6

Movement	EBL	EBT	EBR	WBL	WBT	WBR	NBL	NBT	NBR	SBL	SBT	SBR
Lane Configurations												
Traffic Vol, veh/h	16	0	17	1	0	4	10	367	0	5	377	4
Future Vol, veh/h	16	0	17	1	0	4	10	367	0	5	377	4
Conflicting Peds, #/hr	0	0	0	0	0	0	0	0	0	0	0	0
Sign Control	Stop	Stop	Stop	Stop	Stop	Stop	Free	Free	Free	Free	Free	Free
RT Channelized	-	-	Stop	-	-	Stop	-	-	None	-	-	None
Storage Length	-	-	-	-	-	-	610	-	600	565	-	550
Veh in Median Storage, #	-	0	-	-	0	-	-	0	-	-	0	-
Grade, %	-	0	-	-	0	-	-	0	-	-	0	-
Peak Hour Factor	90	90	90	90	90	90	90	90	90	90	90	90
Heavy Vehicles, %	7	2	2	2	2	2	33	13	2	2	15	25
Mvmt Flow	18	0	19	1	0	4	11	408	0	6	419	4

Major/Minor	Minor2			Minor1			Major1			Major2		
Conflicting Flow All	657	861	210	652	865	204	423	0	0	408	0	0
Stage 1	431	431	-	430	430	-	-	-	-	-	-	-
Stage 2	226	430	-	222	435	-	-	-	-	-	-	-
Critical Hdwy	7.64	6.54	6.94	7.54	6.54	6.94	4.76	-	-	4.14	-	-
Critical Hdwy Stg 1	6.64	5.54	-	6.54	5.54	-	-	-	-	-	-	-
Critical Hdwy Stg 2	6.64	5.54	-	6.54	5.54	-	-	-	-	-	-	-
Follow-up Hdwy	3.57	4.02	3.32	3.52	4.02	3.32	2.53	-	-	2.22	-	-
Pot Cap-1 Maneuver	340	292	796	353	290	803	940	-	-	1147	-	-
Stage 1	560	581	-	574	582	-	-	-	-	-	-	-
Stage 2	742	582	-	760	579	-	-	-	-	-	-	-
Platoon blocked, %								-	-		-	-
Mov Cap-1 Maneuver	334	287	796	340	285	803	940	-	-	1147	-	-
Mov Cap-2 Maneuver	334	287	-	340	285	-	-	-	-	-	-	-
Stage 1	553	578	-	567	575	-	-	-	-	-	-	-
Stage 2	729	575	-	738	576	-	-	-	-	-	-	-

Approach	EB	WB	NB	SB
HCM Control Delay, s	10.5	8.6	0.2	0.1
HCM LOS	B	A		

Minor Lane/Major Mvmt	NBL	NBT	NBR	EBLn1	WBLn1	SBL	SBT	SBR
Capacity (veh/h)	940	-	-	689	1004	1147	-	-
HCM Lane V/C Ratio	0.012	-	-	0.053	0.006	0.005	-	-
HCM Control Delay (s)	8.9	-	-	10.5	8.6	8.2	-	-
HCM Lane LOS	A	-	-	B	A	A	-	-
HCM 95th %tile Q(veh)	0	-	-	0.2	0	0	-	-

Intersection	
Int Delay, s/veh	5.2

Movement	EBL	EBR	NBL	NBT	SBT	SBR
Lane Configurations						
Traffic Vol, veh/h	95	5	2	37	21	33
Future Vol, veh/h	95	5	2	37	21	33
Conflicting Peds, #/hr	0	0	0	0	0	0
Sign Control	Stop	Stop	Free	Free	Free	Free
RT Channelized	-	None	-	None	-	None
Storage Length	0	-	-	-	-	-
Veh in Median Storage, #	0	-	-	0	0	-
Grade, %	0	-	-	0	0	-
Peak Hour Factor	69	69	69	69	69	69
Heavy Vehicles, %	2	2	2	19	2	2
Mvmt Flow	138	7	3	54	30	48

Major/Minor	Minor2		Major1		Major2	
Conflicting Flow All	114	54	78	0	-	0
Stage 1	54	-	-	-	-	-
Stage 2	60	-	-	-	-	-
Critical Hdwy	6.42	6.22	4.12	-	-	-
Critical Hdwy Stg 1	5.42	-	-	-	-	-
Critical Hdwy Stg 2	5.42	-	-	-	-	-
Follow-up Hdwy	3.518	3.318	2.218	-	-	-
Pot Cap-1 Maneuver	882	1013	1520	-	-	-
Stage 1	969	-	-	-	-	-
Stage 2	963	-	-	-	-	-
Platoon blocked, %				-	-	-
Mov Cap-1 Maneuver	880	1013	1520	-	-	-
Mov Cap-2 Maneuver	880	-	-	-	-	-
Stage 1	967	-	-	-	-	-
Stage 2	963	-	-	-	-	-

Approach	EB	NB	SB
HCM Control Delay, s	9.9	0.4	0
HCM LOS	A		

Minor Lane/Major Mvmt	NBL	NBT	EBLn1	SBT	SBR
Capacity (veh/h)	1520	-	886	-	-
HCM Lane V/C Ratio	0.002	-	0.164	-	-
HCM Control Delay (s)	7.4	0	9.9	-	-
HCM Lane LOS	A	A	A	-	-
HCM 95th %tile Q(veh)	0	-	0.6	-	-

Intersection	
Int Delay, s/veh	2.9

Movement	EBL	EBR	NBL	NBT	SBT	SBR
Lane Configurations						
Traffic Vol, veh/h	18	1	0	19	15	6
Future Vol, veh/h	18	1	0	19	15	6
Conflicting Peds, #/hr	0	0	0	0	0	0
Sign Control	Stop	Stop	Free	Free	Free	Free
RT Channelized	-	None	-	None	-	None
Storage Length	0	-	-	-	-	-
Veh in Median Storage, #	0	-	-	0	0	-
Grade, %	0	-	-	0	0	-
Peak Hour Factor	69	69	69	69	69	69
Heavy Vehicles, %	2	2	2	16	2	2
Mvmt Flow	26	1	0	28	22	9

Major/Minor	Minor2		Major1		Major2	
Conflicting Flow All	55	27	31	0	-	0
Stage 1	27	-	-	-	-	-
Stage 2	28	-	-	-	-	-
Critical Hdwy	6.42	6.22	4.12	-	-	-
Critical Hdwy Stg 1	5.42	-	-	-	-	-
Critical Hdwy Stg 2	5.42	-	-	-	-	-
Follow-up Hdwy	3.518	3.318	2.218	-	-	-
Pot Cap-1 Maneuver	953	1048	1582	-	-	-
Stage 1	996	-	-	-	-	-
Stage 2	995	-	-	-	-	-
Platoon blocked, %				-	-	-
Mov Cap-1 Maneuver	953	1048	1582	-	-	-
Mov Cap-2 Maneuver	953	-	-	-	-	-
Stage 1	996	-	-	-	-	-
Stage 2	995	-	-	-	-	-

Approach	EB	NB	SB
HCM Control Delay, s	8.9	0	0
HCM LOS	A		

Minor Lane/Major Mvmt	NBL	NBT	EBLn1	SBT	SBR
Capacity (veh/h)	1582	-	958	-	-
HCM Lane V/C Ratio	-	-	0.029	-	-
HCM Control Delay (s)	0	-	8.9	-	-
HCM Lane LOS	A	-	A	-	-
HCM 95th %tile Q(veh)	0	-	0.1	-	-

MOVEMENT SUMMARY

Site: 1 [1. SR 124 / US Highway 12 Westbound Ramp (2025-PM-With_Both_Projects) (Site Folder: 2025-PM-With_Both_Projects)]

SR 124 / US Highway 12 Westbound Ramp
Site Category: (None)
Roundabout

Vehicle Movement Performance

Mov ID	Turn	INPUT VOLUMES [Total veh/h	HV] %	DEMAND FLOWS [Total veh/h	HV] %	Deg. Satn v/c	Aver. Delay sec	Level of Service	95% BACK OF QUEUE [Veh. veh	Dist] ft	Prop. Que	Effective Stop Rate	Aver. No. Cycles	Aver. Speed mph
South: SR 124														
3u	U	3	6.0	3	6.0	0.483	11.1	LOS B	0.0	0.0	0.00	0.63	0.00	35.2
3	L2	491	4.0	571	4.0	0.483	9.1	LOS A	0.0	0.0	0.00	0.63	0.00	34.7
8	T1	275	2.0	320	2.0	0.483	4.8	LOS A	0.0	0.0	0.00	0.63	0.00	35.0
Approach		769	3.3	894	3.3	0.483	7.6	LOS A	0.0	0.0	0.00	0.63	0.00	34.8
East: US Highway 12 Westbound Ramp														
1	L2	57	11.0	66	11.0	0.135	15.8	LOS B	0.7	18.3	0.71	0.86	0.71	28.3
16	R2	5	2.0	6	2.0	0.135	10.7	LOS B	0.7	18.3	0.71	0.86	0.71	28.0
Approach		62	10.3	72	10.3	0.135	15.4	LOS B	0.7	18.3	0.71	0.86	0.71	28.3
North: SR 124														
4	T1	58	11.0	67	11.0	0.083	8.3	LOS A	0.4	11.2	0.60	0.67	0.60	34.4
14	R2	514	3.0	598	3.0	0.627	10.9	LOS B	5.8	149.7	0.78	0.94	1.01	32.5
Approach		572	3.8	665	3.8	0.627	10.6	LOS B	5.8	149.7	0.76	0.91	0.97	32.7
All Vehicles		1403	3.8	1631	3.8	0.627	9.2	LOS A	5.8	149.7	0.34	0.75	0.43	33.6

Site Level of Service (LOS) Method: Delay & Degree of Saturation (SIDRA). Site LOS Method is specified in the Parameter Settings dialog (Site tab).
Roundabout LOS Method: Same as Signalised Intersections.
Vehicle movement LOS values are based on average delay and v/c ratio (degree of saturation) per movement.
Intersection and Approach LOS values are based on average delay for all movements (v/c not used).
Roundabout Capacity Model: SIDRA Standard.
Delay Model: SIDRA Standard (Geometric Delay is included).
Queue Model: HCM Queue Formula.
Gap-Acceptance Capacity: SIDRA Standard (Akçelik M3D).
HV (%) values are calculated for All Movement Classes of All Heavy Vehicle Model Designation.

MOVEMENT SUMMARY

Site: 1 [2. SR 124 and 5th Avenue / Gateway Road and US Highway 12 Eastbound Ramp (2025-PM-With_Both_Projects (Site Folder: 2025-PM-With_Both_Projects)]

SR 124 and 5th Avenue / Gateway Road and US Highway 12 Eastbound Ramp
Site Category: (None)
Roundabout

Vehicle Movement Performance

Mov ID	Turn	INPUT VOLUMES [Total veh/h	HV] %	DEMAND FLOWS [Total veh/h	HV] %	Deg. Satn v/c	Aver. Delay sec	Level of Service	95% BACK OF QUEUE [Veh. veh	Dist] ft	Prop. Que	Effective Stop Rate	Aver. No. Cycles	Aver. Speed mph
South: 5th Avenue														
3	L2	3	2.0	3	2.0	0.533	6.5	LOS A	4.0	102.6	0.45	0.38	0.45	24.7
8	T1	453	2.0	482	2.0	0.533	2.5	LOS A	4.0	102.6	0.45	0.38	0.45	24.5
18	R2	85	2.0	90	2.0	0.533	3.1	LOS A	4.0	102.6	0.45	0.38	0.45	24.1
Approach		541	2.0	576	2.0	0.533	2.6	LOS A	4.0	102.6	0.45	0.38	0.45	24.5
East: US Highway 12 Westbound Ramp														
1	L2	517	2.0	550	2.0	0.654	13.2	LOS B	6.0	153.2	0.78	0.97	0.99	29.4
6	T1	60	7.0	64	7.0	0.654	9.2	LOS A	6.0	153.2	0.78	0.97	0.99	29.4
16	R2	215	6.0	229	6.0	0.654	4.0	LOS A	6.0	153.2	0.08	0.52	0.10	32.2
Approach		792	3.5	843	3.5	0.654	10.4	LOS B	6.0	153.2	0.59	0.85	0.74	30.1
North: SR 124														
7	L2	4	25.0	4	25.0	0.193	13.0	LOS B	1.0	26.1	0.65	0.75	0.65	33.6
4	T1	109	4.0	116	4.0	0.193	7.7	LOS A	1.0	26.1	0.65	0.75	0.65	34.6
14	R2	11	17.0	12	17.0	0.193	8.2	LOS A	1.0	26.1	0.65	0.75	0.65	33.4
Approach		124	5.8	132	5.8	0.193	7.9	LOS A	1.0	26.1	0.65	0.75	0.65	34.4
West: Gateway Road														
5	L2	90	4.0	96	4.0	0.188	9.6	LOS A	1.0	26.7	0.70	0.79	0.70	23.4
2	T1	15	2.0	16	2.0	0.188	5.6	LOS A	1.0	26.7	0.70	0.79	0.70	23.3
12	R2	7	2.0	7	2.0	0.188	6.0	LOS A	1.0	26.7	0.70	0.79	0.70	22.9
Approach		112	3.6	119	3.6	0.188	8.9	LOS A	1.0	26.7	0.70	0.79	0.70	23.3
All Vehicles		1569	3.2	1669	3.2	0.654	7.4	LOS A	6.0	153.2	0.56	0.67	0.63	27.6

Site Level of Service (LOS) Method: Delay & Degree of Saturation (SIDRA). Site LOS Method is specified in the Parameter Settings dialog (Site tab).
Roundabout LOS Method: Same as Signalised Intersections.
Vehicle movement LOS values are based on average delay and v/c ratio (degree of saturation) per movement.
Intersection and Approach LOS values are based on average delay for all movements (v/c not used).
Roundabout Capacity Model: SIDRA Standard.
Delay Model: SIDRA Standard (Geometric Delay is included).
Queue Model: HCM Queue Formula.
Gap-Acceptance Capacity: SIDRA Standard (Akçelik M3D).
HV (%) values are calculated for All Movement Classes of All Heavy Vehicle Model Designation.

Intersection	
Int Delay, s/veh	18.1

Movement	EBL	EBT	EBR	WBL	WBT	WBR	NBL	NBT	NBR	SBL	SBT	SBR
Lane Configurations												
Traffic Vol, veh/h	15	1	1	21	0	422	1	102	12	486	146	7
Future Vol, veh/h	15	1	1	21	0	422	1	102	12	486	146	7
Conflicting Peds, #/hr	0	0	0	0	0	0	0	0	0	0	0	0
Sign Control	Stop	Stop	Stop	Stop	Stop	Stop	Free	Free	Free	Free	Free	Free
RT Channelized	-	-	None	-	-	None	-	-	None	-	-	None
Storage Length	-	-	-	-	-	-	-	-	-	-	-	-
Veh in Median Storage, #	-	0	-	-	0	-	-	0	-	-	0	-
Grade, %	-	0	-	-	0	-	-	0	-	-	0	-
Peak Hour Factor	89	89	89	89	89	89	89	89	89	89	89	89
Heavy Vehicles, %	2	2	2	2	2	3	2	2	2	2	3	2
Mvmt Flow	17	1	1	24	0	474	1	115	13	546	164	8

Major/Minor	Minor2			Minor1			Major1			Major2		
Conflicting Flow All	1621	1390	168	1385	1388	122	172	0	0	128	0	0
Stage 1	1260	1260	-	124	124	-	-	-	-	-	-	-
Stage 2	361	130	-	1261	1264	-	-	-	-	-	-	-
Critical Hdwy	7.12	6.52	6.22	7.12	6.52	6.23	4.12	-	-	4.12	-	-
Critical Hdwy Stg 1	6.12	5.52	-	6.12	5.52	-	-	-	-	-	-	-
Critical Hdwy Stg 2	6.12	5.52	-	6.12	5.52	-	-	-	-	-	-	-
Follow-up Hdwy	3.518	4.018	3.318	3.518	4.018	3.327	2.218	-	-	2.218	-	-
Pot Cap-1 Maneuver	83	142	876	121	143	926	1405	-	-	1458	-	-
Stage 1	209	242	-	880	793	-	-	-	-	-	-	-
Stage 2	657	789	-	209	241	-	-	-	-	-	-	-
Platoon blocked, %								-	-		-	-
Mov Cap-1 Maneuver	27	83	876	81	84	926	1405	-	-	1458	-	-
Mov Cap-2 Maneuver	27	83	-	81	84	-	-	-	-	-	-	-
Stage 1	209	142	-	879	792	-	-	-	-	-	-	-
Stage 2	320	788	-	121	141	-	-	-	-	-	-	-

Approach	EB	WB	NB	SB
HCM Control Delay, s	245.9	30.2	0.1	6.8
HCM LOS	F	D		

Minor Lane/Major Mvmt	NBL	NBT	NBR	EBLn1	WBLn1	SBL	SBT	SBR
Capacity (veh/h)	1405	-	-	30	620	1458	-	-
HCM Lane V/C Ratio	0.001	-	-	0.637	0.803	0.375	-	-
HCM Control Delay (s)	7.6	0	-	245.9	30.2	8.9	0	-
HCM Lane LOS	A	A	-	F	D	A	A	-
HCM 95th %tile Q(veh)	0	-	-	2.1	8	1.8	-	-

Intersection	
Int Delay, s/veh	13.5

Movement	EBL	EBT	EBR	WBL	WBT	WBR	NBL	NBT	NBR	SBL	SBT	SBR
Lane Configurations												
Traffic Vol, veh/h	7	3	7	8	4	29	2	185	3	53	332	17
Future Vol, veh/h	7	3	7	8	4	29	2	185	3	53	332	17
Conflicting Peds, #/hr	0	0	0	0	0	0	0	0	0	0	0	0
Sign Control	Free	Free	Free	Free	Free	Free	Stop	Stop	Stop	Stop	Stop	Stop
RT Channelized	-	-	None	-	-	None	-	-	None	-	-	None
Storage Length	-	-	-	-	-	-	-	-	-	-	-	-
Veh in Median Storage, #	-	0	-	-	0	-	-	0	-	-	0	-
Grade, %	-	0	-	-	0	-	-	0	-	-	0	-
Peak Hour Factor	85	85	85	85	85	85	85	85	85	85	85	85
Heavy Vehicles, %	2	2	2	14	2	2	2	2	2	2	2	2
Mvmt Flow	8	4	8	9	5	34	2	218	4	62	391	20

Major/Minor	Major1			Major2			Minor1			Minor2		
Conflicting Flow All	39	0	0	12	0	0	270	81	8	175	68	22
Stage 1	-	-	-	-	-	-	24	24	-	40	40	-
Stage 2	-	-	-	-	-	-	246	57	-	135	28	-
Critical Hdwy	4.12	-	-	4.24	-	-	7.12	6.52	6.22	7.12	6.52	6.22
Critical Hdwy Stg 1	-	-	-	-	-	-	6.12	5.52	-	6.12	5.52	-
Critical Hdwy Stg 2	-	-	-	-	-	-	6.12	5.52	-	6.12	5.52	-
Follow-up Hdwy	2.218	-	-	2.326	-	-	3.518	4.018	3.318	3.518	4.018	3.318
Pot Cap-1 Maneuver	1571	-	-	1532	-	-	683	809	1074	788	823	1055
Stage 1	-	-	-	-	-	-	994	875	-	975	862	-
Stage 2	-	-	-	-	-	-	758	847	-	868	872	-
Platoon blocked, %		-	-		-	-						
Mov Cap-1 Maneuver	1571	-	-	1532	-	-	415	800	1074	615	814	1055
Mov Cap-2 Maneuver	-	-	-	-	-	-	415	800	-	615	814	-
Stage 1	-	-	-	-	-	-	989	871	-	970	857	-
Stage 2	-	-	-	-	-	-	402	842	-	646	868	-

Approach	EB	WB	NB	SB
HCM Control Delay, s	3	1.4	11.3	16.2
HCM LOS			B	C

Minor Lane/Major Mvmt	NBLn1	EBL	EBT	EBR	WBL	WBT	WBR	SBLn1
Capacity (veh/h)	795	1571	-	-	1532	-	-	788
HCM Lane V/C Ratio	0.281	0.005	-	-	0.006	-	-	0.6
HCM Control Delay (s)	11.3	7.3	0	-	7.4	0	-	16.2
HCM Lane LOS	B	A	A	-	A	A	-	C
HCM 95th %tile Q(veh)	1.2	0	-	-	0	-	-	4.1

Intersection	
Int Delay, s/veh	3.6

Movement	EBL	EBT	EBR	WBL	WBT	WBR	NBL	NBT	NBR	SBL	SBT	SBR
Lane Configurations												
Traffic Vol, veh/h	1	10	0	14	21	29	0	2	3	18	5	1
Future Vol, veh/h	1	10	0	14	21	29	0	2	3	18	5	1
Conflicting Peds, #/hr	0	0	0	0	0	0	0	0	0	0	0	0
Sign Control	Free	Free	Free	Free	Free	Free	Stop	Stop	Stop	Stop	Stop	Stop
RT Channelized	-	-	None	-	-	None	-	-	None	-	-	None
Storage Length	-	-	-	-	-	-	-	-	-	-	-	-
Veh in Median Storage, #	-	0	-	-	0	-	-	0	-	-	0	-
Grade, %	-	0	-	-	0	-	-	0	-	-	0	-
Peak Hour Factor	86	86	86	86	86	86	86	86	86	86	86	86
Heavy Vehicles, %	2	11	2	2	5	2	2	2	2	2	2	2
Mvmt Flow	1	12	0	16	24	34	0	2	3	21	6	1

Major/Minor	Major1			Major2			Minor1			Minor2		
Conflicting Flow All	58	0	0	12	0	0	91	104	12	90	87	41
Stage 1	-	-	-	-	-	-	14	14	-	73	73	-
Stage 2	-	-	-	-	-	-	77	90	-	17	14	-
Critical Hdwy	4.12	-	-	4.12	-	-	7.12	6.52	6.22	7.12	6.52	6.22
Critical Hdwy Stg 1	-	-	-	-	-	-	6.12	5.52	-	6.12	5.52	-
Critical Hdwy Stg 2	-	-	-	-	-	-	6.12	5.52	-	6.12	5.52	-
Follow-up Hdwy	2.218	-	-	2.218	-	-	3.518	4.018	3.318	3.518	4.018	3.318
Pot Cap-1 Maneuver	1546	-	-	1607	-	-	893	786	1069	895	803	1030
Stage 1	-	-	-	-	-	-	1006	884	-	937	834	-
Stage 2	-	-	-	-	-	-	932	820	-	1002	884	-
Platoon blocked, %		-	-		-	-						
Mov Cap-1 Maneuver	1546	-	-	1607	-	-	880	777	1069	882	794	1030
Mov Cap-2 Maneuver	-	-	-	-	-	-	880	777	-	882	794	-
Stage 1	-	-	-	-	-	-	1005	883	-	936	826	-
Stage 2	-	-	-	-	-	-	915	812	-	995	883	-

Approach	EB	WB	NB	SB
HCM Control Delay, s	0.7	1.6	8.9	9.3
HCM LOS			A	A

Minor Lane/Major Mvmt	NBLn1	EBL	EBT	EBR	WBL	WBT	WBR	SBLn1
Capacity (veh/h)	929	1546	-	-	1607	-	-	867
HCM Lane V/C Ratio	0.006	0.001	-	-	0.01	-	-	0.032
HCM Control Delay (s)	8.9	7.3	0	-	7.3	0	-	9.3
HCM Lane LOS	A	A	A	-	A	A	-	A
HCM 95th %tile Q(veh)	0	0	-	-	0	-	-	0.1

Intersection	
Int Delay, s/veh	0.9

Movement	EBL	EBT	EBR	WBL	WBT	WBR	NBL	NBT	NBR	SBL	SBT	SBR
Lane Configurations												
Traffic Vol, veh/h	14	2	15	3	0	4	20	1035	1	6	433	36
Future Vol, veh/h	14	2	15	3	0	4	20	1035	1	6	433	36
Conflicting Peds, #/hr	0	0	0	0	0	0	0	0	0	0	0	0
Sign Control	Stop	Stop	Stop	Stop	Stop	Stop	Free	Free	Free	Free	Free	Free
RT Channelized	-	-	Stop	-	-	Stop	-	-	None	-	-	None
Storage Length	-	-	-	-	-	-	610	-	600	565	-	550
Veh in Median Storage, #	-	0	-	-	0	-	-	0	-	-	0	-
Grade, %	-	0	-	-	0	-	-	0	-	-	0	-
Peak Hour Factor	79	79	79	79	79	79	79	79	79	79	79	79
Heavy Vehicles, %	2	2	2	2	2	2	14	6	2	17	19	6
Mvmt Flow	18	3	19	4	0	5	25	1310	1	8	548	46

Major/Minor	Minor2			Minor1			Major1			Major2		
Conflicting Flow All	1269	1925	274	1652	1970	655	594	0	0	1311	0	0
Stage 1	564	564	-	1360	1360	-	-	-	-	-	-	-
Stage 2	705	1361	-	292	610	-	-	-	-	-	-	-
Critical Hdwy	7.54	6.54	6.94	7.54	6.54	6.94	4.38	-	-	4.44	-	-
Critical Hdwy Stg 1	6.54	5.54	-	6.54	5.54	-	-	-	-	-	-	-
Critical Hdwy Stg 2	6.54	5.54	-	6.54	5.54	-	-	-	-	-	-	-
Follow-up Hdwy	3.52	4.02	3.32	3.52	4.02	3.32	2.34	-	-	2.37	-	-
Pot Cap-1 Maneuver	125	66	724	65	62	409	900	-	-	450	-	-
Stage 1	478	507	-	156	215	-	-	-	-	-	-	-
Stage 2	393	215	-	692	483	-	-	-	-	-	-	-
Platoon blocked, %								-	-		-	-
Mov Cap-1 Maneuver	119	63	724	59	59	409	900	-	-	450	-	-
Mov Cap-2 Maneuver	119	63	-	59	59	-	-	-	-	-	-	-
Stage 1	465	498	-	152	209	-	-	-	-	-	-	-
Stage 2	377	209	-	659	474	-	-	-	-	-	-	-

Approach	EB	WB	NB	SB
HCM Control Delay, s	26.3	32.9	0.2	0.2
HCM LOS	D	D		

Minor Lane/Major Mvmt	NBL	NBT	NBR	EBLn1	WBLn1	SBL	SBT	SBR
Capacity (veh/h)	900	-	-	208	138	450	-	-
HCM Lane V/C Ratio	0.028	-	-	0.189	0.064	0.017	-	-
HCM Control Delay (s)	9.1	-	-	26.3	32.9	13.1	-	-
HCM Lane LOS	A	-	-	D	D	B	-	-
HCM 95th %tile Q(veh)	0.1	-	-	0.7	0.2	0.1	-	-

Intersection	
Int Delay, s/veh	3.1

Movement	EBL	EBR	NBL	NBT	SBT	SBR
Lane Configurations						
Traffic Vol, veh/h	66	3	6	25	35	112
Future Vol, veh/h	66	3	6	25	35	112
Conflicting Peds, #/hr	0	0	0	0	0	0
Sign Control	Stop	Stop	Free	Free	Free	Free
RT Channelized	-	None	-	None	-	None
Storage Length	0	-	-	-	-	-
Veh in Median Storage, #	0	-	-	0	0	-
Grade, %	0	-	-	0	0	-
Peak Hour Factor	64	64	64	64	64	64
Heavy Vehicles, %	2	2	2	2	2	2
Mvmt Flow	103	5	9	39	55	175

Major/Minor	Minor2		Major1		Major2	
Conflicting Flow All	200	143	230	0	-	0
Stage 1	143	-	-	-	-	-
Stage 2	57	-	-	-	-	-
Critical Hdwy	6.42	6.22	4.12	-	-	-
Critical Hdwy Stg 1	5.42	-	-	-	-	-
Critical Hdwy Stg 2	5.42	-	-	-	-	-
Follow-up Hdwy	3.518	3.318	2.218	-	-	-
Pot Cap-1 Maneuver	789	905	1338	-	-	-
Stage 1	884	-	-	-	-	-
Stage 2	966	-	-	-	-	-
Platoon blocked, %				-	-	-
Mov Cap-1 Maneuver	783	905	1338	-	-	-
Mov Cap-2 Maneuver	783	-	-	-	-	-
Stage 1	878	-	-	-	-	-
Stage 2	966	-	-	-	-	-

Approach	EB	NB	SB
HCM Control Delay, s	10.3	1.5	0
HCM LOS	B		

Minor Lane/Major Mvmt	NBL	NBT	EBLn1	SBT	SBR
Capacity (veh/h)	1338	-	788	-	-
HCM Lane V/C Ratio	0.007	-	0.137	-	-
HCM Control Delay (s)	7.7	0	10.3	-	-
HCM Lane LOS	A	A	B	-	-
HCM 95th %tile Q(veh)	0	-	0.5	-	-

Intersection	
Int Delay, s/veh	1.9

Movement	EBL	EBR	NBL	NBT	SBT	SBR
Lane Configurations						
Traffic Vol, veh/h	13	1	1	18	16	22
Future Vol, veh/h	13	1	1	18	16	22
Conflicting Peds, #/hr	0	0	0	0	0	0
Sign Control	Stop	Stop	Free	Free	Free	Free
RT Channelized	-	None	-	None	-	None
Storage Length	0	-	-	-	-	-
Veh in Median Storage, #	0	-	-	0	0	-
Grade, %	0	-	-	0	0	-
Peak Hour Factor	64	64	64	64	64	64
Heavy Vehicles, %	2	2	2	2	2	2
Mvmt Flow	20	2	2	28	25	34

Major/Minor	Minor2		Major1		Major2	
Conflicting Flow All	74	42	59	0	-	0
Stage 1	42	-	-	-	-	-
Stage 2	32	-	-	-	-	-
Critical Hdwy	6.42	6.22	4.12	-	-	-
Critical Hdwy Stg 1	5.42	-	-	-	-	-
Critical Hdwy Stg 2	5.42	-	-	-	-	-
Follow-up Hdwy	3.518	3.318	2.218	-	-	-
Pot Cap-1 Maneuver	930	1029	1545	-	-	-
Stage 1	980	-	-	-	-	-
Stage 2	991	-	-	-	-	-
Platoon blocked, %				-	-	-
Mov Cap-1 Maneuver	929	1029	1545	-	-	-
Mov Cap-2 Maneuver	929	-	-	-	-	-
Stage 1	979	-	-	-	-	-
Stage 2	991	-	-	-	-	-

Approach	EB	NB	SB
HCM Control Delay, s	8.9	0.4	0
HCM LOS	A		

Minor Lane/Major Mvmt	NBL	NBT	EBLn1	SBT	SBR
Capacity (veh/h)	1545	-	935	-	-
HCM Lane V/C Ratio	0.001	-	0.023	-	-
HCM Control Delay (s)	7.3	0	8.9	-	-
HCM Lane LOS	A	A	A	-	-
HCM 95th %tile Q(veh)	0	-	0.1	-	-

MOVEMENT SUMMARY

Site: 1 [1. SR 124 / US Highway 12 Westbound Ramp (2028-AM-Without-Project) (Site Folder: 2028-AM-Without-Project)]

SR 124 / US Highway 12 Westbound Ramp
Site Category: (None)
Roundabout

Vehicle Movement Performance

Mov ID	Turn	INPUT VOLUMES [Total veh/h	HV] %	DEMAND FLOWS [Total veh/h	HV] %	Deg. Satn v/c	Aver. Delay sec	Level of Service	95% BACK OF QUEUE [Veh. veh	Dist] ft	Prop. Que	Effective Stop Rate	Aver. No. Cycles	Aver. Speed mph
South: SR 124														
3u	U	1	2.0	1	2.0	0.368	11.0	LOS B	0.0	0.0	0.00	0.62	0.00	35.4
3	L2	338	9.0	407	9.0	0.368	9.1	LOS A	0.0	0.0	0.00	0.62	0.00	34.6
8	T1	199	8.0	240	8.0	0.368	4.8	LOS A	0.0	0.0	0.00	0.62	0.00	34.9
Approach		538	8.6	648	8.6	0.368	7.5	LOS A	0.0	0.0	0.00	0.62	0.00	34.7
East: US Highway 12 Westbound Ramp														
1	L2	127	9.0	153	9.0	0.249	13.3	LOS B	1.2	33.4	0.66	0.85	0.66	29.1
16	R2	7	17.0	8	17.0	0.249	9.7	LOS A	1.2	33.4	0.66	0.85	0.66	28.6
Approach		134	9.4	161	9.4	0.249	13.1	LOS B	1.2	33.4	0.66	0.85	0.66	29.1
North: SR 124														
4	T1	103	6.0	124	6.0	0.140	7.7	LOS A	0.7	19.3	0.60	0.67	0.60	34.7
14	R2	153	5.0	184	5.0	0.181	6.5	LOS A	0.9	22.8	0.49	0.66	0.49	34.7
Approach		256	5.4	308	5.4	0.181	7.0	LOS A	0.9	22.8	0.54	0.66	0.54	34.7
All Vehicles		928	7.8	1118	7.8	0.368	8.2	LOS A	1.2	33.4	0.24	0.67	0.24	33.8

Site Level of Service (LOS) Method: Delay & Degree of Saturation (SIDRA). Site LOS Method is specified in the Parameter Settings dialog (Site tab).
Roundabout LOS Method: Same as Signalised Intersections.
Vehicle movement LOS values are based on average delay and v/c ratio (degree of saturation) per movement.
Intersection and Approach LOS values are based on average delay for all movements (v/c not used).
Roundabout Capacity Model: SIDRA Standard.
Delay Model: SIDRA Standard (Geometric Delay is included).
Queue Model: HCM Queue Formula.
Gap-Acceptance Capacity: SIDRA Standard (Akçelik M3D).
HV (%) values are calculated for All Movement Classes of All Heavy Vehicle Model Designation.

MOVEMENT SUMMARY

Site: 1 [2. SR 124 and 5th Avenue / Gateway Road and US Highway 12 Eastbound Ramp (2028-AM-Without-Project) (Site Folder: 2028-AM-Without-Project)]

SR 124 and 5th Avenue / Gateway Road and US Highway 12 Eastbound Ramp
Site Category: (None)
Roundabout

Vehicle Movement Performance

Mov ID	Turn	INPUT VOLUMES [Total veh/h	HV] %	DEMAND FLOWS [Total veh/h	HV] %	Deg. Satn v/c	Aver. Delay sec	Level of Service	95% BACK OF QUEUE [Veh. veh	Dist] ft	Prop. Que	Effective Stop Rate	Aver. No. Cycles	Aver. Speed mph
South: 5th Avenue														
3	L2	10	2.0	12	2.0	0.408	6.5	LOS A	2.6	67.6	0.42	0.39	0.42	24.8
8	T1	299	3.0	352	3.0	0.408	2.4	LOS A	2.6	67.6	0.42	0.39	0.42	24.7
18	R2	41	33.0	48	33.0	0.408	4.7	LOS A	2.6	67.6	0.42	0.39	0.42	24.9
Approach		350	6.5	412	6.5	0.408	2.8	LOS A	2.6	67.6	0.42	0.39	0.42	24.7
East: US Highway 12 Westbound Ramp														
1	L2	451	2.0	531	2.0	0.635	11.8	LOS B	5.3	135.3	0.70	0.87	0.83	30.1
6	T1	123	2.0	145	2.0	0.635	7.5	LOS A	5.3	135.3	0.70	0.87	0.83	30.2
16	R2	162	10.0	191	10.0	0.125	3.5	LOS A	0.0	0.0	0.00	0.48	0.00	32.6
Approach		736	3.8	866	3.8	0.635	9.2	LOS A	5.3	135.3	0.55	0.78	0.64	30.6
North: SR 124														
7	L2	8	2.0	9	2.0	0.457	13.8	LOS B	2.9	79.3	0.77	0.92	0.87	33.4
4	T1	191	7.0	225	7.0	0.457	9.9	LOS A	2.9	79.3	0.77	0.92	0.87	33.4
14	R2	32	50.0	38	50.0	0.457	12.9	LOS B	2.9	79.3	0.77	0.92	0.87	31.4
Approach		231	12.8	272	12.8	0.457	10.4	LOS B	2.9	79.3	0.77	0.92	0.87	33.1
West: Gateway Road														
5	L2	77	20.0	91	20.0	0.253	12.0	LOS B	1.3	39.0	0.75	0.88	0.75	22.7
2	T1	9	100.0	11	100.0	0.253	15.6	LOS B	1.3	39.0	0.75	0.88	0.75	22.5
12	R2	8	17.0	9	17.0	0.253	8.3	LOS A	1.3	39.0	0.75	0.88	0.75	22.2
Approach		94	27.4	111	27.4	0.253	12.0	LOS B	1.3	39.0	0.75	0.88	0.75	22.6
All Vehicles		1411	7.5	1660	7.5	0.635	8.0	LOS A	5.3	135.3	0.56	0.72	0.63	28.6

Site Level of Service (LOS) Method: Delay & Degree of Saturation (SIDRA). Site LOS Method is specified in the Parameter Settings dialog (Site tab).
Roundabout LOS Method: Same as Signalised Intersections.
Vehicle movement LOS values are based on average delay and v/c ratio (degree of saturation) per movement.
Intersection and Approach LOS values are based on average delay for all movements (v/c not used).
Roundabout Capacity Model: SIDRA Standard.
Delay Model: SIDRA Standard (Geometric Delay is included).
Queue Model: HCM Queue Formula.
Gap-Acceptance Capacity: SIDRA Standard (Akçelik M3D).
HV (%) values are calculated for All Movement Classes of All Heavy Vehicle Model Designation.

Intersection	
Int Delay, s/veh	8

Movement	EBL	EBT	EBR	WBL	WBT	WBR	NBL	NBT	NBR	SBL	SBT	SBR
Lane Configurations												
Traffic Vol, veh/h	6	1	1	7	2	208	2	150	13	405	219	28
Future Vol, veh/h	6	1	1	7	2	208	2	150	13	405	219	28
Conflicting Peds, #/hr	0	0	0	0	0	0	0	0	0	0	0	0
Sign Control	Stop	Stop	Stop	Stop	Stop	Stop	Free	Free	Free	Free	Free	Free
RT Channelized	-	-	None	-	-	None	-	-	None	-	-	None
Storage Length	-	-	-	-	-	-	-	-	-	-	-	-
Veh in Median Storage, #	-	0	-	-	0	-	-	0	-	-	0	-
Grade, %	-	0	-	-	0	-	-	0	-	-	0	-
Peak Hour Factor	81	81	81	81	81	81	81	81	81	81	81	81
Heavy Vehicles, %	2	2	2	2	2	8	2	2	2	6	2	2
Mvmt Flow	7	1	1	9	2	257	2	185	16	500	270	35

Major/Minor	Minor2			Minor1			Major1			Major2		
Conflicting Flow All	1615	1493	288	1486	1502	193	305	0	0	201	0	0
Stage 1	1288	1288	-	197	197	-	-	-	-	-	-	-
Stage 2	327	205	-	1289	1305	-	-	-	-	-	-	-
Critical Hdwy	7.12	6.52	6.22	7.12	6.52	6.28	4.12	-	-	4.16	-	-
Critical Hdwy Stg 1	6.12	5.52	-	6.12	5.52	-	-	-	-	-	-	-
Critical Hdwy Stg 2	6.12	5.52	-	6.12	5.52	-	-	-	-	-	-	-
Follow-up Hdwy	3.518	4.018	3.318	3.518	4.018	3.372	2.218	-	-	2.254	-	-
Pot Cap-1 Maneuver	83	123	751	103	122	833	1256	-	-	1347	-	-
Stage 1	201	234	-	805	738	-	-	-	-	-	-	-
Stage 2	686	732	-	201	230	-	-	-	-	-	-	-
Platoon blocked, %								-	-		-	-
Mov Cap-1 Maneuver	36	68	751	66	67	833	1256	-	-	1347	-	-
Mov Cap-2 Maneuver	36	68	-	66	67	-	-	-	-	-	-	-
Stage 1	201	129	-	803	737	-	-	-	-	-	-	-
Stage 2	472	731	-	110	127	-	-	-	-	-	-	-

Approach	EB	WB	NB	SB
HCM Control Delay, s	109.1	17.1	0.1	5.7
HCM LOS	F	C		

Minor Lane/Major Mvmt	NBL	NBT	NBR	EBLn1	WBLn1	SBL	SBT	SBR
Capacity (veh/h)	1256	-	-	44	563	1347	-	-
HCM Lane V/C Ratio	0.002	-	-	0.224	0.476	0.371	-	-
HCM Control Delay (s)	7.9	0	-	109.1	17.1	9.2	0	-
HCM Lane LOS	A	A	-	F	C	A	A	-
HCM 95th %tile Q(veh)	0	-	-	0.7	2.5	1.7	-	-

Intersection	
Int Delay, s/veh	7.7

Movement	EBL	EBT	EBR	WBL	WBT	WBR	NBL	NBT	NBR	SBL	SBT	SBR
Lane Configurations												
Traffic Vol, veh/h	38	2	2	5	3	74	2	88	2	25	31	11
Future Vol, veh/h	38	2	2	5	3	74	2	88	2	25	31	11
Conflicting Peds, #/hr	0	0	0	0	0	0	0	0	0	0	0	0
Sign Control	Free	Free	Free	Free	Free	Free	Stop	Stop	Stop	Stop	Stop	Stop
RT Channelized	-	-	None	-	-	None	-	-	None	-	-	None
Storage Length	-	-	-	-	-	-	-	-	-	-	-	-
Veh in Median Storage, #	-	0	-	-	0	-	-	0	-	-	0	-
Grade, %	-	0	-	-	0	-	-	0	-	-	0	-
Peak Hour Factor	72	72	72	72	72	72	72	72	72	72	72	72
Heavy Vehicles, %	6	2	2	2	2	5	100	7	2	2	2	2
Mvmt Flow	53	3	3	7	4	103	3	122	3	35	43	15

Major/Minor	Major1			Major2			Minor1			Minor2		
Conflicting Flow All	107	0	0	6	0	0	210	232	5	243	182	56
Stage 1	-	-	-	-	-	-	111	111	-	70	70	-
Stage 2	-	-	-	-	-	-	99	121	-	173	112	-
Critical Hdwy	4.16	-	-	4.12	-	-	8.1	6.57	6.22	7.12	6.52	6.22
Critical Hdwy Stg 1	-	-	-	-	-	-	7.1	5.57	-	6.12	5.52	-
Critical Hdwy Stg 2	-	-	-	-	-	-	7.1	5.57	-	6.12	5.52	-
Follow-up Hdwy	2.254	-	-	2.218	-	-	4.4	4.063	3.318	3.518	4.018	3.318
Pot Cap-1 Maneuver	1459	-	-	1615	-	-	578	659	1078	711	712	1011
Stage 1	-	-	-	-	-	-	703	794	-	940	837	-
Stage 2	-	-	-	-	-	-	715	786	-	829	803	-
Platoon blocked, %		-	-		-	-						
Mov Cap-1 Maneuver	1459	-	-	1615	-	-	525	632	1078	586	683	1011
Mov Cap-2 Maneuver	-	-	-	-	-	-	525	632	-	586	683	-
Stage 1	-	-	-	-	-	-	678	765	-	906	833	-
Stage 2	-	-	-	-	-	-	664	782	-	670	774	-

Approach	EB	WB	NB	SB
HCM Control Delay, s	6.8	0.4	12.1	11.2
HCM LOS			B	B

Minor Lane/Major Mvmt	NBLn1	EBL	EBT	EBR	WBL	WBT	WBR	SBLn1
Capacity (veh/h)	635	1459	-	-	1615	-	-	677
HCM Lane V/C Ratio	0.201	0.036	-	-	0.004	-	-	0.137
HCM Control Delay (s)	12.1	7.6	0	-	7.2	0	-	11.2
HCM Lane LOS	B	A	A	-	A	A	-	B
HCM 95th %tile Q(veh)	0.7	0.1	-	-	0	-	-	0.5

Intersection	
Int Delay, s/veh	5

Movement	EBL	EBT	EBR	WBL	WBT	WBR	NBL	NBT	NBR	SBL	SBT	SBR
Lane Configurations												
Traffic Vol, veh/h	5	12	0	1	3	6	0	2	8	9	3	1
Future Vol, veh/h	5	12	0	1	3	6	0	2	8	9	3	1
Conflicting Peds, #/hr	0	0	0	0	0	0	0	0	0	0	0	0
Sign Control	Free	Free	Free	Free	Free	Free	Stop	Stop	Stop	Stop	Stop	Stop
RT Channelized	-	-	None	-	-	None	-	-	None	-	-	None
Storage Length	-	-	-	-	-	-	-	-	-	-	-	-
Veh in Median Storage, #	-	0	-	-	0	-	-	0	-	-	0	-
Grade, %	-	0	-	-	0	-	-	0	-	-	0	-
Peak Hour Factor	77	77	77	77	77	77	77	77	77	77	77	77
Heavy Vehicles, %	2	2	2	100	33	20	2	50	2	2	2	2
Mvmt Flow	6	16	0	1	4	8	0	3	10	12	4	1

Major/Minor	Major1			Major2			Minor1			Minor2		
Conflicting Flow All	12	0	0	16	0	0	41	42	16	45	38	8
Stage 1	-	-	-	-	-	-	28	28	-	10	10	-
Stage 2	-	-	-	-	-	-	13	14	-	35	28	-
Critical Hdwy	4.12	-	-	5.1	-	-	7.12	7	6.22	7.12	6.52	6.22
Critical Hdwy Stg 1	-	-	-	-	-	-	6.12	6	-	6.12	5.52	-
Critical Hdwy Stg 2	-	-	-	-	-	-	6.12	6	-	6.12	5.52	-
Follow-up Hdwy	2.218	-	-	3.1	-	-	3.518	4.45	3.318	3.518	4.018	3.318
Pot Cap-1 Maneuver	1607	-	-	1143	-	-	963	765	1063	957	854	1074
Stage 1	-	-	-	-	-	-	989	786	-	1011	887	-
Stage 2	-	-	-	-	-	-	1007	797	-	981	872	-
Platoon blocked, %		-	-		-	-						
Mov Cap-1 Maneuver	1607	-	-	1143	-	-	955	761	1063	942	850	1074
Mov Cap-2 Maneuver	-	-	-	-	-	-	955	761	-	942	850	-
Stage 1	-	-	-	-	-	-	985	783	-	1007	886	-
Stage 2	-	-	-	-	-	-	1000	796	-	964	869	-

Approach	EB	WB	NB	SB
HCM Control Delay, s	2.1	0.8	8.7	9
HCM LOS			A	A

Minor Lane/Major Mvmt	NBLn1	EBL	EBT	EBR	WBL	WBT	WBR	SBLn1
Capacity (veh/h)	985	1607	-	-	1143	-	-	928
HCM Lane V/C Ratio	0.013	0.004	-	-	0.001	-	-	0.018
HCM Control Delay (s)	8.7	7.2	0	-	8.2	0	-	9
HCM Lane LOS	A	A	A	-	A	A	-	A
HCM 95th %tile Q(veh)	0	0	-	-	0	-	-	0.1

Intersection	
Int Delay, s/veh	0.5

Movement	EBL	EBT	EBR	WBL	WBT	WBR	NBL	NBT	NBR	SBL	SBT	SBR
Lane Configurations												
Traffic Vol, veh/h	17	0	7	1	0	5	7	441	0	6	413	5
Future Vol, veh/h	17	0	7	1	0	5	7	441	0	6	413	5
Conflicting Peds, #/hr	0	0	0	0	0	0	0	0	0	0	0	0
Sign Control	Stop	Stop	Stop	Stop	Stop	Stop	Free	Free	Free	Free	Free	Free
RT Channelized	-	-	Stop	-	-	Stop	-	-	None	-	-	None
Storage Length	-	-	-	-	-	-	610	-	600	565	-	550
Veh in Median Storage, #	-	0	-	-	0	-	-	0	-	-	0	-
Grade, %	-	0	-	-	0	-	-	0	-	-	0	-
Peak Hour Factor	90	90	90	90	90	90	90	90	90	90	90	90
Heavy Vehicles, %	7	2	2	2	2	2	33	13	2	2	15	25
Mvmt Flow	19	0	8	1	0	6	8	490	0	7	459	6

Major/Minor	Minor2			Minor1			Major1			Major2		
Conflicting Flow All	734	979	230	750	985	245	465	0	0	490	0	0
Stage 1	473	473	-	506	506	-	-	-	-	-	-	-
Stage 2	261	506	-	244	479	-	-	-	-	-	-	-
Critical Hdwy	7.64	6.54	6.94	7.54	6.54	6.94	4.76	-	-	4.14	-	-
Critical Hdwy Stg 1	6.64	5.54	-	6.54	5.54	-	-	-	-	-	-	-
Critical Hdwy Stg 2	6.64	5.54	-	6.54	5.54	-	-	-	-	-	-	-
Follow-up Hdwy	3.57	4.02	3.32	3.52	4.02	3.32	2.53	-	-	2.22	-	-
Pot Cap-1 Maneuver	299	249	772	300	247	755	902	-	-	1070	-	-
Stage 1	528	557	-	517	538	-	-	-	-	-	-	-
Stage 2	707	538	-	738	553	-	-	-	-	-	-	-
Platoon blocked, %								-	-		-	-
Mov Cap-1 Maneuver	293	245	772	293	243	755	902	-	-	1070	-	-
Mov Cap-2 Maneuver	293	245	-	293	243	-	-	-	-	-	-	-
Stage 1	523	553	-	512	533	-	-	-	-	-	-	-
Stage 2	696	533	-	726	549	-	-	-	-	-	-	-

Approach	EB	WB	NB	SB
HCM Control Delay, s	14.3	9	0.1	0.1
HCM LOS	B	A		

Minor Lane/Major Mvmt	NBL	NBT	NBR	EBLn1	WBLn1	SBL	SBT	SBR
Capacity (veh/h)	902	-	-	414	906	1070	-	-
HCM Lane V/C Ratio	0.009	-	-	0.064	0.007	0.006	-	-
HCM Control Delay (s)	9	-	-	14.3	9	8.4	-	-
HCM Lane LOS	A	-	-	B	A	A	-	-
HCM 95th %tile Q(veh)	0	-	-	0.2	0	0	-	-

MOVEMENT SUMMARY

Site: 1 [1. SR 124 / US Highway 12 Westbound Ramp (2028-PM-Without-Project) (Site Folder: 2028-PM-Without-Project)]

SR 124 / US Highway 12 Westbound Ramp
Site Category: (None)
Roundabout

Vehicle Movement Performance

Mov ID	Turn	INPUT VOLUMES [Total veh/h	HV] %	DEMAND FLOWS [Total veh/h	HV] %	Deg. Satn v/c	Aver. Delay sec	Level of Service	95% BACK OF QUEUE [Veh. veh	Dist] ft	Prop. Que	Effective Stop Rate	Aver. No. Cycles	Aver. Speed mph
South: SR 124														
3u	U	3	6.0	3	6.0	0.543	11.1	LOS B	0.0	0.0	0.00	0.63	0.00	35.1
3	L2	567	4.0	659	4.0	0.543	9.1	LOS A	0.0	0.0	0.00	0.63	0.00	34.7
8	T1	293	2.0	341	2.0	0.543	4.9	LOS A	0.0	0.0	0.00	0.63	0.00	34.9
Approach		863	3.3	1003	3.3	0.543	7.7	LOS A	0.0	0.0	0.00	0.63	0.00	34.8
East: US Highway 12 Westbound Ramp														
1	L2	104	11.0	121	11.0	0.271	18.6	LOS B	1.5	39.7	0.80	0.93	0.80	27.3
16	R2	6	2.0	7	2.0	0.271	13.2	LOS B	1.5	39.7	0.80	0.93	0.80	27.0
Approach		110	10.5	128	10.5	0.271	18.3	LOS B	1.5	39.7	0.80	0.93	0.80	27.3
North: SR 124														
4	T1	54	11.0	63	11.0	0.088	9.6	LOS A	0.5	12.8	0.68	0.72	0.68	33.7
14	R2	545	3.0	634	3.0	0.706	14.1	LOS B	8.1	206.7	0.87	1.09	1.29	31.0
Approach		599	3.7	697	3.7	0.706	13.7	LOS B	8.1	206.7	0.85	1.05	1.24	31.2
All Vehicles		1572	4.0	1828	4.0	0.706	10.7	LOS B	8.1	206.7	0.38	0.81	0.53	32.7

Site Level of Service (LOS) Method: Delay & Degree of Saturation (SIDRA). Site LOS Method is specified in the Parameter Settings dialog (Site tab).
Roundabout LOS Method: Same as Signalised Intersections.
Vehicle movement LOS values are based on average delay and v/c ratio (degree of saturation) per movement.
Intersection and Approach LOS values are based on average delay for all movements (v/c not used).
Roundabout Capacity Model: SIDRA Standard.
Delay Model: SIDRA Standard (Geometric Delay is included).
Queue Model: HCM Queue Formula.
Gap-Acceptance Capacity: SIDRA Standard (Akçelik M3D).
HV (%) values are calculated for All Movement Classes of All Heavy Vehicle Model Designation.

MOVEMENT SUMMARY

Site: 1 [2. SR 124 and 5th Avenue / Gateway Road and US Highway 12 Eastbound Ramp (2028-PM-Without-Project) (Site Folder: 2028-PM-Without-Project)]

SR 124 and 5th Avenue / Gateway Road and US Highway 12 Eastbound Ramp
Site Category: (None)
Roundabout

Vehicle Movement Performance

Mov ID	Turn	INPUT VOLUMES [Total veh/h	HV] %	DEMAND FLOWS [Total veh/h	HV] %	Deg. Satn v/c	Aver. Delay sec	Level of Service	95% BACK OF QUEUE [Veh. veh	Dist] ft	Prop. Que	Effective Stop Rate	Aver. No. Cycles	Aver. Speed mph
South: 5th Avenue														
3	L2	3	2.0	3	2.0	0.671	7.6	LOS A	6.3	158.8	0.65	0.55	0.67	24.4
8	T1	490	2.0	521	2.0	0.671	3.6	LOS A	6.3	158.8	0.65	0.55	0.67	24.3
18	R2	153	2.0	163	2.0	0.671	4.2	LOS A	6.3	158.8	0.65	0.55	0.67	23.9
Approach		646	2.0	687	2.0	0.671	3.8	LOS A	6.3	158.8	0.65	0.55	0.67	24.2
East: US Highway 12 Westbound Ramp														
1	L2	391	2.0	416	2.0	0.619	13.7	LOS B	5.6	143.0	0.83	1.00	1.03	29.3
6	T1	77	7.0	82	7.0	0.619	9.7	LOS A	5.6	143.0	0.83	1.00	1.03	29.4
16	R2	229	6.0	244	6.0	0.619	4.7	LOS A	5.6	143.0	0.16	0.58	0.20	31.8
Approach		697	3.9	741	3.9	0.619	10.3	LOS B	5.6	143.0	0.61	0.86	0.76	30.1
North: SR 124														
7	L2	5	25.0	5	25.0	0.232	12.3	LOS B	1.2	31.1	0.60	0.71	0.60	33.8
4	T1	146	4.0	155	4.0	0.232	7.0	LOS A	1.2	31.1	0.60	0.71	0.60	34.8
14	R2	16	17.0	17	17.0	0.232	7.5	LOS A	1.2	31.1	0.60	0.71	0.60	33.5
Approach		167	5.9	178	5.9	0.232	7.2	LOS A	1.2	31.1	0.60	0.71	0.60	34.6
West: Gateway Road														
5	L2	132	4.0	140	4.0	0.256	9.1	LOS A	1.4	36.4	0.67	0.78	0.67	23.6
2	T1	30	2.0	32	2.0	0.256	5.0	LOS A	1.4	36.4	0.67	0.78	0.67	23.4
12	R2	9	2.0	10	2.0	0.256	5.5	LOS A	1.4	36.4	0.67	0.78	0.67	23.0
Approach		171	3.5	182	3.5	0.256	8.2	LOS A	1.4	36.4	0.67	0.78	0.67	23.5
All Vehicles		1681	3.3	1788	3.3	0.671	7.3	LOS A	6.3	158.8	0.63	0.72	0.70	27.1

Site Level of Service (LOS) Method: Delay & Degree of Saturation (SIDRA). Site LOS Method is specified in the Parameter Settings dialog (Site tab).
Roundabout LOS Method: Same as Signalised Intersections.
Vehicle movement LOS values are based on average delay and v/c ratio (degree of saturation) per movement.
Intersection and Approach LOS values are based on average delay for all movements (v/c not used).
Roundabout Capacity Model: SIDRA Standard.
Delay Model: SIDRA Standard (Geometric Delay is included).
Queue Model: HCM Queue Formula.
Gap-Acceptance Capacity: SIDRA Standard (Akçelik M3D).
HV (%) values are calculated for All Movement Classes of All Heavy Vehicle Model Designation.

Intersection	
Int Delay, s/veh	25.7

Movement	EBL	EBT	EBR	WBL	WBT	WBR	NBL	NBT	NBR	SBL	SBT	SBR
Lane Configurations												
Traffic Vol, veh/h	29	2	2	23	1	488	1	127	13	376	164	12
Future Vol, veh/h	29	2	2	23	1	488	1	127	13	376	164	12
Conflicting Peds, #/hr	0	0	0	0	0	0	0	0	0	0	0	0
Sign Control	Stop	Stop	Stop	Stop	Stop	Stop	Free	Free	Free	Free	Free	Free
RT Channelized	-	-	None	-	-	None	-	-	None	-	-	None
Storage Length	-	-	-	-	-	-	-	-	-	-	-	-
Veh in Median Storage, #	-	0	-	-	0	-	-	0	-	-	0	-
Grade, %	-	0	-	-	0	-	-	0	-	-	0	-
Peak Hour Factor	89	89	89	89	89	89	89	89	89	89	89	89
Heavy Vehicles, %	2	2	2	2	2	3	2	2	2	2	3	2
Mvmt Flow	33	2	2	26	1	548	1	143	15	422	184	13

Major/Minor	Minor2			Minor1			Major1			Major2		
Conflicting Flow All	1462	1195	191	1190	1194	151	197	0	0	158	0	0
Stage 1	1035	1035	-	153	153	-	-	-	-	-	-	-
Stage 2	427	160	-	1037	1041	-	-	-	-	-	-	-
Critical Hdwy	7.12	6.52	6.22	7.12	6.52	6.23	4.12	-	-	4.12	-	-
Critical Hdwy Stg 1	6.12	5.52	-	6.12	5.52	-	-	-	-	-	-	-
Critical Hdwy Stg 2	6.12	5.52	-	6.12	5.52	-	-	-	-	-	-	-
Follow-up Hdwy	3.518	4.018	3.318	3.518	4.018	3.327	2.218	-	-	2.218	-	-
Pot Cap-1 Maneuver	107	186	851	165	187	893	1376	-	-	1422	-	-
Stage 1	280	309	-	849	771	-	-	-	-	-	-	-
Stage 2	606	766	-	279	307	-	-	-	-	-	-	-
Platoon blocked, %								-	-		-	-
Mov Cap-1 Maneuver	~ 30	124	851	120	124	893	1376	-	-	1422	-	-
Mov Cap-2 Maneuver	~ 30	124	-	120	124	-	-	-	-	-	-	-
Stage 1	280	206	-	848	770	-	-	-	-	-	-	-
Stage 2	233	765	-	183	204	-	-	-	-	-	-	-

Approach	EB	WB	NB	SB
HCM Control Delay, s	$ 378.4	31.4	0.1	5.9
HCM LOS	F	D		

Minor Lane/Major Mvmt	NBL	NBT	NBR	EBLn1	WBLn1	SBL	SBT	SBR
Capacity (veh/h)	1376	-	-	33	686	1422	-	-
HCM Lane V/C Ratio	0.001	-	-	1.124	0.839	0.297	-	-
HCM Control Delay (s)	7.6	0	-	$ 378.4	31.4	8.6	0	-
HCM Lane LOS	A	A	-	F	D	A	A	-
HCM 95th %tile Q(veh)	0	-	-	4	9.3	1.3	-	-

Notes

~: Volume exceeds capacity $: Delay exceeds 300s +: Computation Not Defined *: All major volume in platoon

Intersection	
Int Delay, s/veh	8.5

Movement	EBL	EBT	EBR	WBL	WBT	WBR	NBL	NBT	NBR	SBL	SBT	SBR
Lane Configurations												
Traffic Vol, veh/h	11	3	8	10	5	31	3	39	3	59	87	21
Future Vol, veh/h	11	3	8	10	5	31	3	39	3	59	87	21
Conflicting Peds, #/hr	0	0	0	0	0	0	0	0	0	0	0	0
Sign Control	Free	Free	Free	Free	Free	Free	Stop	Stop	Stop	Stop	Stop	Stop
RT Channelized	-	-	None	-	-	None	-	-	None	-	-	None
Storage Length	-	-	-	-	-	-	-	-	-	-	-	-
Veh in Median Storage, #	-	0	-	-	0	-	-	0	-	-	0	-
Grade, %	-	0	-	-	0	-	-	0	-	-	0	-
Peak Hour Factor	85	85	85	85	85	85	85	85	85	85	85	85
Heavy Vehicles, %	2	2	2	14	2	2	2	2	2	2	2	2
Mvmt Flow	13	4	9	12	6	36	4	46	4	69	102	25

Major/Minor	Major1			Major2			Minor1			Minor2		
Conflicting Flow All	42	0	0	13	0	0	147	101	9	108	87	24
Stage 1	-	-	-	-	-	-	35	35	-	48	48	-
Stage 2	-	-	-	-	-	-	112	66	-	60	39	-
Critical Hdwy	4.12	-	-	4.24	-	-	7.12	6.52	6.22	7.12	6.52	6.22
Critical Hdwy Stg 1	-	-	-	-	-	-	6.12	5.52	-	6.12	5.52	-
Critical Hdwy Stg 2	-	-	-	-	-	-	6.12	5.52	-	6.12	5.52	-
Follow-up Hdwy	2.218	-	-	2.326	-	-	3.518	4.018	3.318	3.518	4.018	3.318
Pot Cap-1 Maneuver	1567	-	-	1531	-	-	821	789	1073	871	803	1052
Stage 1	-	-	-	-	-	-	981	866	-	965	855	-
Stage 2	-	-	-	-	-	-	893	840	-	951	862	-
Platoon blocked, %		-	-		-	-						
Mov Cap-1 Maneuver	1567	-	-	1531	-	-	713	776	1073	819	790	1052
Mov Cap-2 Maneuver	-	-	-	-	-	-	713	776	-	819	790	-
Stage 1	-	-	-	-	-	-	973	859	-	957	848	-
Stage 2	-	-	-	-	-	-	761	833	-	890	855	-

Approach	EB	WB	NB	SB
HCM Control Delay, s	3.7	1.6	9.9	10.7
HCM LOS			A	B

Minor Lane/Major Mvmt	NBLn1	EBL	EBT	EBR	WBL	WBT	WBR	SBLn1
Capacity (veh/h)	786	1567	-	-	1531	-	-	826
HCM Lane V/C Ratio	0.067	0.008	-	-	0.008	-	-	0.238
HCM Control Delay (s)	9.9	7.3	0	-	7.4	0	-	10.7
HCM Lane LOS	A	A	A	-	A	A	-	B
HCM 95th %tile Q(veh)	0.2	0	-	-	0	-	-	0.9

Intersection	
Int Delay, s/veh	3.5

Movement	EBL	EBT	EBR	WBL	WBT	WBR	NBL	NBT	NBR	SBL	SBT	SBR
Lane Configurations												
Traffic Vol, veh/h	1	10	0	14	23	17	0	2	3	10	5	1
Future Vol, veh/h	1	10	0	14	23	17	0	2	3	10	5	1
Conflicting Peds, #/hr	0	0	0	0	0	0	0	0	0	0	0	0
Sign Control	Free	Free	Free	Free	Free	Free	Stop	Stop	Stop	Stop	Stop	Stop
RT Channelized	-	-	None	-	-	None	-	-	None	-	-	None
Storage Length	-	-	-	-	-	-	-	-	-	-	-	-
Veh in Median Storage, #	-	0	-	-	0	-	-	0	-	-	0	-
Grade, %	-	0	-	-	0	-	-	0	-	-	0	-
Peak Hour Factor	86	86	86	86	86	86	86	86	86	86	86	86
Heavy Vehicles, %	2	11	2	2	5	2	2	2	2	2	2	2
Mvmt Flow	1	12	0	16	27	20	0	2	3	12	6	1

Major/Minor	Major1			Major2			Minor1			Minor2		
Conflicting Flow All	47	0	0	12	0	0	87	93	12	86	83	37
Stage 1	-	-	-	-	-	-	14	14	-	69	69	-
Stage 2	-	-	-	-	-	-	73	79	-	17	14	-
Critical Hdwy	4.12	-	-	4.12	-	-	7.12	6.52	6.22	7.12	6.52	6.22
Critical Hdwy Stg 1	-	-	-	-	-	-	6.12	5.52	-	6.12	5.52	-
Critical Hdwy Stg 2	-	-	-	-	-	-	6.12	5.52	-	6.12	5.52	-
Follow-up Hdwy	2.218	-	-	2.218	-	-	3.518	4.018	3.318	3.518	4.018	3.318
Pot Cap-1 Maneuver	1560	-	-	1607	-	-	899	797	1069	900	807	1035
Stage 1	-	-	-	-	-	-	1006	884	-	941	837	-
Stage 2	-	-	-	-	-	-	937	829	-	1002	884	-
Platoon blocked, %		-	-		-	-						
Mov Cap-1 Maneuver	1560	-	-	1607	-	-	886	788	1069	887	798	1035
Mov Cap-2 Maneuver	-	-	-	-	-	-	886	788	-	887	798	-
Stage 1	-	-	-	-	-	-	1005	883	-	940	829	-
Stage 2	-	-	-	-	-	-	920	821	-	995	883	-

Approach	EB	WB	NB	SB
HCM Control Delay, s	0.7	1.9	8.9	9.3
HCM LOS			A	A

Minor Lane/Major Mvmt	NBLn1	EBL	EBT	EBR	WBL	WBT	WBR	SBLn1
Capacity (veh/h)	936	1560	-	-	1607	-	-	865
HCM Lane V/C Ratio	0.006	0.001	-	-	0.01	-	-	0.022
HCM Control Delay (s)	8.9	7.3	0	-	7.3	0	-	9.3
HCM Lane LOS	A	A	A	-	A	A	-	A
HCM 95th %tile Q(veh)	0	0	-	-	0	-	-	0.1

Intersection	
Int Delay, s/veh	0.9

Movement	EBL	EBT	EBR	WBL	WBT	WBR	NBL	NBT	NBR	SBL	SBT	SBR
Lane Configurations												
Traffic Vol, veh/h	15	2	8	3	0	5	8	1123	1	7	525	38
Future Vol, veh/h	15	2	8	3	0	5	8	1123	1	7	525	38
Conflicting Peds, #/hr	0	0	0	0	0	0	0	0	0	0	0	0
Sign Control	Stop	Stop	Stop	Stop	Stop	Stop	Free	Free	Free	Free	Free	Free
RT Channelized	-	-	Stop	-	-	Stop	-	-	None	-	-	None
Storage Length	-	-	-	-	-	-	610	-	600	565	-	550
Veh in Median Storage, #	-	0	-	-	0	-	-	0	-	-	0	-
Grade, %	-	0	-	-	0	-	-	0	-	-	0	-
Peak Hour Factor	79	79	79	79	79	79	79	79	79	79	79	79
Heavy Vehicles, %	2	2	2	2	2	2	14	6	2	17	19	6
Mvmt Flow	19	3	10	4	0	6	10	1422	1	9	665	48

Major/Minor	Minor2			Minor1			Major1			Major2		
Conflicting Flow All	1414	2126	333	1794	2173	711	713	0	0	1423	0	0
Stage 1	683	683	-	1442	1442	-	-	-	-	-	-	-
Stage 2	731	1443	-	352	731	-	-	-	-	-	-	-
Critical Hdwy	7.54	6.54	6.94	7.54	6.54	6.94	4.38	-	-	4.44	-	-
Critical Hdwy Stg 1	6.54	5.54	-	6.54	5.54	-	-	-	-	-	-	-
Critical Hdwy Stg 2	6.54	5.54	-	6.54	5.54	-	-	-	-	-	-	-
Follow-up Hdwy	3.52	4.02	3.32	3.52	4.02	3.32	2.34	-	-	2.37	-	-
Pot Cap-1 Maneuver	98	49	663	51	46	375	807	-	-	405	-	-
Stage 1	405	447	-	139	196	-	-	-	-	-	-	-
Stage 2	379	196	-	638	425	-	-	-	-	-	-	-
Platoon blocked, %								-	-		-	-
Mov Cap-1 Maneuver	94	47	663	47	44	375	807	-	-	405	-	-
Mov Cap-2 Maneuver	94	47	-	47	44	-	-	-	-	-	-	-
Stage 1	400	437	-	137	194	-	-	-	-	-	-	-
Stage 2	368	194	-	611	416	-	-	-	-	-	-	-

Approach	EB	WB	NB	SB
HCM Control Delay, s	43.7	36.3	0.1	0.2
HCM LOS	E	E		

Minor Lane/Major Mvmt	NBL	NBT	NBR	EBLn1	WBLn1	SBL	SBT	SBR
Capacity (veh/h)	807	-	-	124	125	405	-	-
HCM Lane V/C Ratio	0.013	-	-	0.255	0.081	0.022	-	-
HCM Control Delay (s)	9.5	-	-	43.7	36.3	14.1	-	-
HCM Lane LOS	A	-	-	E	E	B	-	-
HCM 95th %tile Q(veh)	0	-	-	0.9	0.3	0.1	-	-

MOVEMENT SUMMARY

Site: 1 [1. SR 124 / US Highway 12 Westbound Ramp (2028-AM-With-Project(Huntsman)) (Site Folder: 2028-AM-With-Project (Huntsman))]

SR 124 / US Highway 12 Westbound Ramp
Site Category: (None)
Roundabout

Vehicle Movement Performance

Mov ID	Turn	INPUT VOLUMES [Total veh/h	HV] %	DEMAND FLOWS [Total veh/h	HV] %	Deg. Satn v/c	Aver. Delay sec	Level of Service	95% BACK OF QUEUE [Veh. veh	Dist] ft	Prop. Que	Effective Stop Rate	Aver. No. Cycles	Aver. Speed mph
South: SR 124														
3u	U	1	2.0	1	2.0	0.513	11.1	LOS B	0.0	0.0	0.00	0.64	0.00	35.1
3	L2	535	9.0	645	9.0	0.513	9.2	LOS A	0.0	0.0	0.00	0.64	0.00	34.4
8	T1	211	8.0	254	8.0	0.513	4.9	LOS A	0.0	0.0	0.00	0.64	0.00	34.7
Approach		747	8.7	900	8.7	0.513	8.0	LOS A	0.0	0.0	0.00	0.64	0.00	34.4
East: US Highway 12 Westbound Ramp														
1	L2	127	9.0	153	9.0	0.316	17.4	LOS B	1.7	46.5	0.79	0.92	0.79	27.7
16	R2	7	17.0	8	17.0	0.316	14.1	LOS B	1.7	46.5	0.79	0.92	0.79	27.2
Approach		134	9.4	161	9.4	0.316	17.3	LOS B	1.7	46.5	0.79	0.92	0.79	27.6
North: SR 124														
4	T1	107	6.0	129	6.0	0.179	10.2	LOS B	1.0	27.2	0.73	0.78	0.73	33.6
14	R2	153	5.0	184	5.0	0.213	8.4	LOS A	1.1	29.6	0.64	0.75	0.64	33.7
Approach		260	5.4	313	5.4	0.213	9.1	LOS A	1.1	29.6	0.68	0.76	0.68	33.6
All Vehicles		1141	8.0	1375	8.0	0.513	9.3	LOS A	1.7	46.5	0.25	0.70	0.25	33.3

Site Level of Service (LOS) Method: Delay & Degree of Saturation (SIDRA). Site LOS Method is specified in the Parameter Settings dialog (Site tab).
Roundabout LOS Method: Same as Signalised Intersections.
Vehicle movement LOS values are based on average delay and v/c ratio (degree of saturation) per movement.
Intersection and Approach LOS values are based on average delay for all movements (v/c not used).
Roundabout Capacity Model: SIDRA Standard.
Delay Model: SIDRA Standard (Geometric Delay is included).
Queue Model: HCM Queue Formula.
Gap-Acceptance Capacity: SIDRA Standard (Akçelik M3D).
HV (%) values are calculated for All Movement Classes of All Heavy Vehicle Model Designation.

MOVEMENT SUMMARY

Site: 1 [2. SR 124 and 5th Avenue / Gateway Road and US Highway 12 Eastbound Ramp (2028-AM-With-Project(Hunts (Site Folder: 2028-AM-With-Project(Huntsman))]

SR 124 and 5th Avenue / Gateway Road and US Highway 12 Eastbound Ramp
Site Category: (None)
Roundabout

Vehicle Movement Performance

Mov ID	Turn	INPUT VOLUMES [Total veh/h	HV] %	DEMAND FLOWS [Total veh/h	HV] %	Deg. Satn v/c	Aver. Delay sec	Level of Service	95% BACK OF QUEUE [Veh. veh	Dist] ft	Prop. Que	Effective Stop Rate	Aver. No. Cycles	Aver. Speed mph
South: 5th Avenue														
3	L2	10	2.0	12	2.0	0.644	6.9	LOS A	5.8	150.6	0.58	0.44	0.58	24.5
8	T1	508	3.0	598	3.0	0.644	2.9	LOS A	5.8	150.6	0.58	0.44	0.58	24.4
18	R2	41	33.0	48	33.0	0.644	5.4	LOS A	5.8	150.6	0.58	0.44	0.58	24.6
Approach		559	5.2	658	5.2	0.644	3.1	LOS A	5.8	150.6	0.58	0.44	0.58	24.4
East: US Highway 12 Westbound Ramp														
1	L2	520	2.0	612	2.0	0.892	24.8	LOS D	16.0	406.7	1.00	1.42	1.95	25.6
6	T1	123	2.0	145	2.0	0.892	20.5	LOS D	16.0	406.7	1.00	1.42	1.95	25.7
16	R2	162	10.0	191	10.0	0.125	3.5	LOS A	0.0	0.0	0.00	0.48	0.00	32.6
Approach		805	3.6	947	3.6	0.892	19.9	LOS B	16.0	406.7	0.80	1.23	1.56	26.8
North: SR 124														
7	L2	8	2.0	9	2.0	0.566	16.3	LOS B	4.3	117.3	0.90	1.02	1.09	32.1
4	T1	195	7.0	229	7.0	0.566	12.4	LOS B	4.3	117.3	0.90	1.02	1.09	32.2
14	R2	32	50.0	38	50.0	0.566	15.8	LOS B	4.3	117.3	0.90	1.02	1.09	30.3
Approach		235	12.7	276	12.7	0.566	13.0	LOS B	4.3	117.3	0.90	1.02	1.09	31.9
West: Gateway Road														
5	L2	77	20.0	91	20.0	0.309	13.3	LOS B	1.7	51.2	0.83	0.92	0.83	22.3
2	T1	9	100.0	11	100.0	0.309	18.2	LOS B	1.7	51.2	0.83	0.92	0.83	22.2
12	R2	8	17.0	9	17.0	0.309	9.5	LOS A	1.7	51.2	0.83	0.92	0.83	21.9
Approach		94	27.4	111	27.4	0.309	13.4	LOS B	1.7	51.2	0.83	0.92	0.83	22.3
All Vehicles		1693	6.7	1992	6.7	0.892	13.0	LOS B	16.0	406.7	0.74	0.92	1.13	26.2

Site Level of Service (LOS) Method: Delay & Degree of Saturation (SIDRA). Site LOS Method is specified in the Parameter Settings dialog (Site tab).
Roundabout LOS Method: Same as Signalised Intersections.
Vehicle movement LOS values are based on average delay and v/c ratio (degree of saturation) per movement.
Intersection and Approach LOS values are based on average delay for all movements (v/c not used).
Roundabout Capacity Model: SIDRA Standard.
Delay Model: SIDRA Standard (Geometric Delay is included).
Queue Model: HCM Queue Formula.
Gap-Acceptance Capacity: SIDRA Standard (Akçelik M3D).
HV (%) values are calculated for All Movement Classes of All Heavy Vehicle Model Designation.

Intersection	
Int Delay, s/veh	18.8

Movement	EBL	EBT	EBR	WBL	WBT	WBR	NBL	NBT	NBR	SBL	SBT	SBR
Lane Configurations												
Traffic Vol, veh/h	6	1	1	7	2	417	2	150	13	478	219	28
Future Vol, veh/h	6	1	1	7	2	417	2	150	13	478	219	28
Conflicting Peds, #/hr	0	0	0	0	0	0	0	0	0	0	0	0
Sign Control	Stop	Stop	Stop	Stop	Stop	Stop	Free	Free	Free	Free	Free	Free
RT Channelized	-	-	None	-	-	None	-	-	None	-	-	None
Storage Length	-	-	-	-	-	-	-	-	-	-	-	-
Veh in Median Storage, #	-	0	-	-	0	-	-	0	-	-	0	-
Grade, %	-	0	-	-	0	-	-	0	-	-	0	-
Peak Hour Factor	81	81	81	81	81	81	81	81	81	81	81	81
Heavy Vehicles, %	2	2	2	2	2	8	2	2	2	6	2	2
Mvmt Flow	7	1	1	9	2	515	2	185	16	590	270	35

Major/Minor	Minor2			Minor1			Major1			Major2		
Conflicting Flow All	1924	1673	288	1666	1682	193	305	0	0	201	0	0
Stage 1	1468	1468	-	197	197	-	-	-	-	-	-	-
Stage 2	456	205	-	1469	1485	-	-	-	-	-	-	-
Critical Hdwy	7.12	6.52	6.22	7.12	6.52	6.28	4.12	-	-	4.16	-	-
Critical Hdwy Stg 1	6.12	5.52	-	6.12	5.52	-	-	-	-	-	-	-
Critical Hdwy Stg 2	6.12	5.52	-	6.12	5.52	-	-	-	-	-	-	-
Follow-up Hdwy	3.518	4.018	3.318	3.518	4.018	3.372	2.218	-	-	2.254	-	-
Pot Cap-1 Maneuver	51	96	751	77	94	833	1256	-	-	1347	-	-
Stage 1	159	192	-	805	738	-	-	-	-	-	-	-
Stage 2	584	732	-	159	188	-	-	-	-	-	-	-
Platoon blocked, %								-	-		-	-
Mov Cap-1 Maneuver	11	45	751	44	44	833	1256	-	-	1347	-	-
Mov Cap-2 Maneuver	11	45	-	44	44	-	-	-	-	-	-	-
Stage 1	159	90	-	803	737	-	-	-	-	-	-	-
Stage 2	222	731	-	74	88	-	-	-	-	-	-	-

Approach	EB	WB	NB	SB
HCM Control Delay, s$	489.2	38.3	0.1	6.4
HCM LOS	F	E		

Minor Lane/Major Mvmt	NBL	NBT	NBR	EBLn1	WBLn1	SBL	SBT	SBR
Capacity (veh/h)	1256	-	-	14	604	1347	-	-
HCM Lane V/C Ratio	0.002	-	-	0.705	0.871	0.438	-	-
HCM Control Delay (s)	7.9	0	-$	489.2	38.3	9.7	0	-
HCM Lane LOS	A	A	-	F	E	A	A	-
HCM 95th %tile Q(veh)	0	-	-	1.7	10	2.3	-	-

Notes

~: Volume exceeds capacity $: Delay exceeds 300s +: Computation Not Defined *: All major volume in platoon

Intersection	
Int Delay, s/veh	16.4

Movement	EBL	EBT	EBR	WBL	WBT	WBR	NBL	NBT	NBR	SBL	SBT	SBR
Lane Configurations												
Traffic Vol, veh/h	38	2	2	5	3	74	2	308	2	25	108	11
Future Vol, veh/h	38	2	2	5	3	74	2	308	2	25	108	11
Conflicting Peds, #/hr	0	0	0	0	0	0	0	0	0	0	0	0
Sign Control	Free	Free	Free	Free	Free	Free	Stop	Stop	Stop	Stop	Stop	Stop
RT Channelized	-	-	None	-	-	None	-	-	None	-	-	None
Storage Length	-	-	-	-	-	-	-	-	-	-	-	-
Veh in Median Storage, #	-	0	-	-	0	-	-	0	-	-	0	-
Grade, %	-	0	-	-	0	-	-	0	-	-	0	-
Peak Hour Factor	72	72	72	72	72	72	72	72	72	72	72	72
Heavy Vehicles, %	6	2	2	2	2	5	100	7	2	2	2	2
Mvmt Flow	53	3	3	7	4	103	3	428	3	35	150	15

Major/Minor	Major1			Major2			Minor1			Minor2		
Conflicting Flow All	107	0	0	6	0	0	263	232	5	396	182	56
Stage 1	-	-	-	-	-	-	111	111	-	70	70	-
Stage 2	-	-	-	-	-	-	152	121	-	326	112	-
Critical Hdwy	4.16	-	-	4.12	-	-	8.1	6.57	6.22	7.12	6.52	6.22
Critical Hdwy Stg 1	-	-	-	-	-	-	7.1	5.57	-	6.12	5.52	-
Critical Hdwy Stg 2	-	-	-	-	-	-	7.1	5.57	-	6.12	5.52	-
Follow-up Hdwy	2.254	-	-	2.218	-	-	4.4	4.063	3.318	3.518	4.018	3.318
Pot Cap-1 Maneuver	1459	-	-	1615	-	-	529	659	1078	564	712	1011
Stage 1	-	-	-	-	-	-	703	794	-	940	837	-
Stage 2	-	-	-	-	-	-	664	786	-	687	803	-
Platoon blocked, %		-	-		-	-						
Mov Cap-1 Maneuver	1459	-	-	1615	-	-	420	632	1078	249	683	1011
Mov Cap-2 Maneuver	-	-	-	-	-	-	420	632	-	249	683	-
Stage 1	-	-	-	-	-	-	678	765	-	906	833	-
Stage 2	-	-	-	-	-	-	534	782	-	291	774	-

Approach	EB	WB	NB	SB
HCM Control Delay, s	6.8	0.4	22.2	15.7
HCM LOS			C	C

Minor Lane/Major Mvmt	NBLn1	EBL	EBT	EBR	WBL	WBT	WBR	SBLn1
Capacity (veh/h)	632	1459	-	-	1615	-	-	535
HCM Lane V/C Ratio	0.686	0.036	-	-	0.004	-	-	0.374
HCM Control Delay (s)	22.2	7.6	0	-	7.2	0	-	15.7
HCM Lane LOS	C	A	A	-	A	A	-	C
HCM 95th %tile Q(veh)	5.4	0.1	-	-	0	-	-	1.7

Intersection	
Int Delay, s/veh	5.4

Movement	EBL	EBT	EBR	WBL	WBT	WBR	NBL	NBT	NBR	SBL	SBT	SBR
Lane Configurations												
Traffic Vol, veh/h	5	12	0	1	3	10	0	2	8	21	3	1
Future Vol, veh/h	5	12	0	1	3	10	0	2	8	21	3	1
Conflicting Peds, #/hr	0	0	0	0	0	0	0	0	0	0	0	0
Sign Control	Free	Free	Free	Free	Free	Free	Stop	Stop	Stop	Stop	Stop	Stop
RT Channelized	-	-	None	-	-	None	-	-	None	-	-	None
Storage Length	-	-	-	-	-	-	-	-	-	-	-	-
Veh in Median Storage, #	-	0	-	-	0	-	-	0	-	-	0	-
Grade, %	-	0	-	-	0	-	-	0	-	-	0	-
Peak Hour Factor	77	77	77	77	77	77	77	77	77	77	77	77
Heavy Vehicles, %	2	2	2	100	33	20	2	50	2	2	2	2
Mvmt Flow	6	16	0	1	4	13	0	3	10	27	4	1

Major/Minor	Major1			Major2			Minor1			Minor2		
Conflicting Flow All	17	0	0	16	0	0	43	47	16	48	41	11
Stage 1	-	-	-	-	-	-	28	28	-	13	13	-
Stage 2	-	-	-	-	-	-	15	19	-	35	28	-
Critical Hdwy	4.12	-	-	5.1	-	-	7.12	7	6.22	7.12	6.52	6.22
Critical Hdwy Stg 1	-	-	-	-	-	-	6.12	6	-	6.12	5.52	-
Critical Hdwy Stg 2	-	-	-	-	-	-	6.12	6	-	6.12	5.52	-
Follow-up Hdwy	2.218	-	-	3.1	-	-	3.518	4.45	3.318	3.518	4.018	3.318
Pot Cap-1 Maneuver	1600	-	-	1143	-	-	960	760	1063	953	851	1070
Stage 1	-	-	-	-	-	-	989	786	-	1007	885	-
Stage 2	-	-	-	-	-	-	1005	793	-	981	872	-
Platoon blocked, %		-	-		-	-						
Mov Cap-1 Maneuver	1600	-	-	1143	-	-	951	756	1063	938	847	1070
Mov Cap-2 Maneuver	-	-	-	-	-	-	951	756	-	938	847	-
Stage 1	-	-	-	-	-	-	985	783	-	1003	884	-
Stage 2	-	-	-	-	-	-	998	792	-	964	869	-

Approach	EB	WB	NB	SB
HCM Control Delay, s	2.1	0.6	8.7	9
HCM LOS			A	A

Minor Lane/Major Mvmt	NBLn1	EBL	EBT	EBR	WBL	WBT	WBR	SBLn1
Capacity (veh/h)	983	1600	-	-	1143	-	-	931
HCM Lane V/C Ratio	0.013	0.004	-	-	0.001	-	-	0.035
HCM Control Delay (s)	8.7	7.3	0	-	8.2	0	-	9
HCM Lane LOS	A	A	A	-	A	A	-	A
HCM 95th %tile Q(veh)	0	0	-	-	0	-	-	0.1

Intersection	
Int Delay, s/veh	0.6

Movement	EBL	EBT	EBR	WBL	WBT	WBR	NBL	NBT	NBR	SBL	SBT	SBR
Lane Configurations												
Traffic Vol, veh/h	17	0	19	1	0	5	11	441	0	6	413	5
Future Vol, veh/h	17	0	19	1	0	5	11	441	0	6	413	5
Conflicting Peds, #/hr	0	0	0	0	0	0	0	0	0	0	0	0
Sign Control	Stop	Stop	Stop	Stop	Stop	Stop	Free	Free	Free	Free	Free	Free
RT Channelized	-	-	Stop	-	-	Stop	-	-	None	-	-	None
Storage Length	-	-	-	-	-	-	610	-	600	565	-	550
Veh in Median Storage, #	-	0	-	-	0	-	-	0	-	-	0	-
Grade, %	-	0	-	-	0	-	-	0	-	-	0	-
Peak Hour Factor	90	90	90	90	90	90	90	90	90	90	90	90
Heavy Vehicles, %	7	2	2	2	2	2	33	13	2	2	15	25
Mvmt Flow	19	0	21	1	0	6	12	490	0	7	459	6

Major/Minor	Minor2			Minor1			Major1			Major2		
Conflicting Flow All	742	987	230	758	993	245	465	0	0	490	0	0
Stage 1	473	473	-	514	514	-	-	-	-	-	-	-
Stage 2	269	514	-	244	479	-	-	-	-	-	-	-
Critical Hdwy	7.64	6.54	6.94	7.54	6.54	6.94	4.76	-	-	4.14	-	-
Critical Hdwy Stg 1	6.64	5.54	-	6.54	5.54	-	-	-	-	-	-	-
Critical Hdwy Stg 2	6.64	5.54	-	6.54	5.54	-	-	-	-	-	-	-
Follow-up Hdwy	3.57	4.02	3.32	3.52	4.02	3.32	2.53	-	-	2.22	-	-
Pot Cap-1 Maneuver	295	246	772	296	244	755	902	-	-	1070	-	-
Stage 1	528	557	-	511	534	-	-	-	-	-	-	-
Stage 2	700	534	-	738	553	-	-	-	-	-	-	-
Platoon blocked, %								-	-		-	-
Mov Cap-1 Maneuver	289	241	772	284	239	755	902	-	-	1070	-	-
Mov Cap-2 Maneuver	289	241	-	284	239	-	-	-	-	-	-	-
Stage 1	521	553	-	504	527	-	-	-	-	-	-	-
Stage 2	686	527	-	713	549	-	-	-	-	-	-	-

Approach	EB	WB	NB	SB
HCM Control Delay, s	11.3	9	0.2	0.1
HCM LOS	B	A		

Minor Lane/Major Mvmt	NBL	NBT	NBR	EBLn1	WBLn1	SBL	SBT	SBR
Capacity (veh/h)	902	-	-	612	906	1070	-	-
HCM Lane V/C Ratio	0.014	-	-	0.065	0.007	0.006	-	-
HCM Control Delay (s)	9	-	-	11.3	9	8.4	-	-
HCM Lane LOS	A	-	-	B	A	A	-	-
HCM 95th %tile Q(veh)	0	-	-	0.2	0	0	-	-

Intersection	
Int Delay, s/veh	6.5

Movement	EBL	EBR	NBL	NBT	SBT	SBR
Lane Configurations						
Traffic Vol, veh/h	182	6	2	56	23	64
Future Vol, veh/h	182	6	2	56	23	64
Conflicting Peds, #/hr	0	0	0	0	0	0
Sign Control	Stop	Stop	Free	Free	Free	Free
RT Channelized	-	None	-	None	-	None
Storage Length	0	-	-	-	-	-
Veh in Median Storage, #	0	-	-	0	0	-
Grade, %	0	-	-	0	0	-
Peak Hour Factor	69	69	69	69	69	69
Heavy Vehicles, %	2	2	2	19	2	2
Mvmt Flow	264	9	3	81	33	93

Major/Minor	Minor2		Major1		Major2	
Conflicting Flow All	167	80	126	0	-	0
Stage 1	80	-	-	-	-	-
Stage 2	87	-	-	-	-	-
Critical Hdwy	6.42	6.22	4.12	-	-	-
Critical Hdwy Stg 1	5.42	-	-	-	-	-
Critical Hdwy Stg 2	5.42	-	-	-	-	-
Follow-up Hdwy	3.518	3.318	2.218	-	-	-
Pot Cap-1 Maneuver	823	980	1460	-	-	-
Stage 1	943	-	-	-	-	-
Stage 2	936	-	-	-	-	-
Platoon blocked, %				-	-	-
Mov Cap-1 Maneuver	821	980	1460	-	-	-
Mov Cap-2 Maneuver	821	-	-	-	-	-
Stage 1	941	-	-	-	-	-
Stage 2	936	-	-	-	-	-

Approach	EB	NB	SB
HCM Control Delay, s	11.5	0.3	0
HCM LOS	B		

Minor Lane/Major Mvmt	NBL	NBT	EBLn1	SBT	SBR
Capacity (veh/h)	1460	-	825	-	-
HCM Lane V/C Ratio	0.002	-	0.33	-	-
HCM Control Delay (s)	7.5	0	11.5	-	-
HCM Lane LOS	A	A	B	-	-
HCM 95th %tile Q(veh)	0	-	1.4	-	-

Intersection	
Int Delay, s/veh	4.4

Movement	EBL	EBR	NBL	NBT	SBT	SBR
Lane Configurations						
Traffic Vol, veh/h	38	6	2	20	16	13
Future Vol, veh/h	38	6	2	20	16	13
Conflicting Peds, #/hr	0	0	0	0	0	0
Sign Control	Stop	Stop	Free	Free	Free	Free
RT Channelized	-	None	-	None	-	None
Storage Length	0	-	-	-	-	-
Veh in Median Storage, #	0	-	-	0	0	-
Grade, %	0	-	-	0	0	-
Peak Hour Factor	69	69	69	69	69	69
Heavy Vehicles, %	2	2	2	16	2	2
Mvmt Flow	55	9	3	29	23	19

Major/Minor	Minor2		Major1		Major2	
Conflicting Flow All	68	33	42	0	-	0
Stage 1	33	-	-	-	-	-
Stage 2	35	-	-	-	-	-
Critical Hdwy	6.42	6.22	4.12	-	-	-
Critical Hdwy Stg 1	5.42	-	-	-	-	-
Critical Hdwy Stg 2	5.42	-	-	-	-	-
Follow-up Hdwy	3.518	3.318	2.218	-	-	-
Pot Cap-1 Maneuver	937	1041	1567	-	-	-
Stage 1	989	-	-	-	-	-
Stage 2	987	-	-	-	-	-
Platoon blocked, %				-	-	-
Mov Cap-1 Maneuver	935	1041	1567	-	-	-
Mov Cap-2 Maneuver	935	-	-	-	-	-
Stage 1	987	-	-	-	-	-
Stage 2	987	-	-	-	-	-

Approach	EB	NB	SB
HCM Control Delay, s	9.1	0.7	0
HCM LOS	A		

Minor Lane/Major Mvmt	NBL	NBT	EBLn1	SBT	SBR
Capacity (veh/h)	1567	-	948	-	-
HCM Lane V/C Ratio	0.002	-	0.067	-	-
HCM Control Delay (s)	7.3	0	9.1	-	-
HCM Lane LOS	A	A	A	-	-
HCM 95th %tile Q(veh)	0	-	0.2	-	-

MOVEMENT SUMMARY

Site: 1 [1. SR 124 / US Highway 12 Westbound Ramp (2028-PM-With-Project(Huntsman)) (Site Folder: 2028-PM-With-Project (Huntsman))]

SR 124 / US Highway 12 Westbound Ramp
Site Category: (None)
Roundabout

Vehicle Movement Performance

Mov ID	Turn	INPUT VOLUMES [Total veh/h	HV] %	DEMAND FLOWS [Total veh/h	HV] %	Deg. Satn v/c	Aver. Delay sec	Level of Service	95% BACK OF QUEUE [Veh. veh	Dist] ft	Prop. Que	Effective Stop Rate	Aver. No. Cycles	Aver. Speed mph
South: SR 124														
3u	U	3	6.0	3	6.0	0.636	11.2	LOS B	0.0	0.0	0.00	0.64	0.00	34.9
3	L2	705	4.0	820	4.0	0.636	9.2	LOS A	0.0	0.0	0.00	0.64	0.00	34.5
8	T1	301	2.0	350	2.0	0.636	4.9	LOS A	0.0	0.0	0.00	0.64	0.00	34.7
Approach		1009	3.4	1173	3.4	0.636	8.0	LOS A	0.0	0.0	0.00	0.64	0.00	34.6
East: US Highway 12 Westbound Ramp														
1	L2	104	11.0	121	11.0	0.339	24.8	LOS C	2.0	55.1	0.88	0.98	0.95	25.4
16	R2	6	2.0	7	2.0	0.339	19.1	LOS B	2.0	55.1	0.88	0.98	0.95	25.1
Approach		110	10.5	128	10.5	0.339	24.5	LOS C	2.0	55.1	0.88	0.98	0.95	25.4
North: SR 124														
4	T1	68	11.0	79	11.0	0.130	12.0	LOS B	0.7	20.3	0.77	0.80	0.77	32.6
14	R2	545	3.0	634	3.0	0.798	22.3	LOS C	12.1	309.1	0.97	1.33	1.86	27.8
Approach		613	3.9	713	3.9	0.798	21.2	LOS C	12.1	309.1	0.95	1.27	1.74	28.3
All Vehicles		1732	4.0	2014	4.0	0.798	13.7	LOS B	12.1	309.1	0.39	0.88	0.68	31.4

Site Level of Service (LOS) Method: Delay & Degree of Saturation (SIDRA). Site LOS Method is specified in the Parameter Settings dialog (Site tab).
Roundabout LOS Method: Same as Signalised Intersections.
Vehicle movement LOS values are based on average delay and v/c ratio (degree of saturation) per movement.
Intersection and Approach LOS values are based on average delay for all movements (v/c not used).
Roundabout Capacity Model: SIDRA Standard.
Delay Model: SIDRA Standard (Geometric Delay is included).
Queue Model: HCM Queue Formula.
Gap-Acceptance Capacity: SIDRA Standard (Akçelik M3D).
HV (%) values are calculated for All Movement Classes of All Heavy Vehicle Model Designation.

MOVEMENT SUMMARY

Site: 1 [2. SR 124 and 5th Avenue / Gateway Road and US Highway 12 Eastbound Ramp (2028-PM-With-Project(Hunts (Site Folder: 2028-PM-With-Project(Huntsman))]

SR 124 and 5th Avenue / Gateway Road and US Highway 12 Eastbound Ramp
Site Category: (None)
Roundabout

Vehicle Movement Performance

Mov ID	Turn	INPUT VOLUMES [Total veh/h	HV] %	DEMAND FLOWS [Total veh/h	HV] %	Deg. Satn v/c	Aver. Delay sec	Level of Service	95% BACK OF QUEUE [Veh. veh	Dist] ft	Prop. Que	Effective Stop Rate	Aver. No. Cycles	Aver. Speed mph
South: 5th Avenue														
3	L2	3	2.0	3	2.0	0.832	10.4	LOS B	13.1	333.7	0.90	0.78	1.02	24.0
8	T1	636	2.0	677	2.0	0.832	6.3	LOS A	13.1	333.7	0.90	0.78	1.02	23.9
18	R2	153	2.0	163	2.0	0.832	6.9	LOS A	13.1	333.7	0.90	0.78	1.02	23.5
Approach		792	2.0	843	2.0	0.832	6.5	LOS A	13.1	333.7	0.90	0.78	1.02	23.8
East: US Highway 12 Westbound Ramp														
1	L2	625	2.0	665	2.0	1.074	68.1	LOS F	37.8	965.5	1.00	2.27	3.97	17.1
6	T1	77	7.0	82	7.0	1.074	64.2	LOS F	37.8	965.5	1.00	2.27	3.97	17.1
16	R2	229	6.0	244	6.0	0.154	3.5	LOS A	0.0	0.0	0.00	0.48	0.00	32.6
Approach		931	3.4	990	3.4	1.074	51.9	LOS D	37.8	965.5	0.75	1.83	2.99	19.3
North: SR 124														
7	L2	5	25.0	5	25.0	0.336	14.1	LOS B	2.0	52.1	0.78	0.86	0.78	33.2
4	T1	160	4.0	170	4.0	0.336	8.6	LOS A	2.0	52.1	0.78	0.86	0.78	34.2
14	R2	16	17.0	17	17.0	0.336	9.2	LOS A	2.0	52.1	0.78	0.86	0.78	33.0
Approach		181	5.7	193	5.7	0.336	8.8	LOS A	2.0	52.1	0.78	0.86	0.78	34.1
West: Gateway Road														
5	L2	132	4.0	140	4.0	0.356	11.5	LOS B	2.2	57.2	0.84	0.93	0.85	23.0
2	T1	30	2.0	32	2.0	0.356	7.3	LOS A	2.2	57.2	0.84	0.93	0.85	22.9
12	R2	9	2.0	10	2.0	0.356	7.8	LOS A	2.2	57.2	0.84	0.93	0.85	22.5
Approach		171	3.5	182	3.5	0.356	10.5	LOS B	2.2	57.2	0.84	0.93	0.85	22.9
All Vehicles		2075	3.1	2207	3.1	1.074	27.4	LOS C	37.8	965.5	0.82	1.27	1.87	22.0

Site Level of Service (LOS) Method: Delay & Degree of Saturation (SIDRA). Site LOS Method is specified in the Parameter Settings dialog (Site tab).
Roundabout LOS Method: Same as Signalised Intersections.
Vehicle movement LOS values are based on average delay and v/c ratio (degree of saturation) per movement.
Intersection and Approach LOS values are based on average delay for all movements (v/c not used).
Roundabout Capacity Model: SIDRA Standard.
Delay Model: SIDRA Standard (Geometric Delay is included).
Queue Model: HCM Queue Formula.
Gap-Acceptance Capacity: SIDRA Standard (Akçelik M3D).
HV (%) values are calculated for All Movement Classes of All Heavy Vehicle Model Designation.

Intersection	
Int Delay, s/veh	202.7

Movement	EBL	EBT	EBR	WBL	WBT	WBR	NBL	NBT	NBR	SBL	SBT	SBR
Lane Configurations												
Traffic Vol, veh/h	29	2	2	23	1	634	1	127	13	624	164	12
Future Vol, veh/h	29	2	2	23	1	634	1	127	13	624	164	12
Conflicting Peds, #/hr	0	0	0	0	0	0	0	0	0	0	0	0
Sign Control	Stop	Stop	Stop	Stop	Stop	Stop	Free	Free	Free	Free	Free	Free
RT Channelized	-	-	None	-	-	None	-	-	None	-	-	None
Storage Length	-	-	-	-	-	-	-	-	-	-	-	-
Veh in Median Storage, #	-	0	-	-	0	-	-	0	-	-	0	-
Grade, %	-	0	-	-	0	-	-	0	-	-	0	-
Peak Hour Factor	89	89	89	89	89	89	89	89	89	89	89	89
Heavy Vehicles, %	2	2	2	2	2	3	2	2	2	2	3	2
Mvmt Flow	33	2	2	26	1	712	1	143	15	701	184	13

Major/Minor	Minor2			Minor1			Major1			Major2		
Conflicting Flow All	2102	1753	191	1748	1752	151	197	0	0	158	0	0
Stage 1	1593	1593	-	153	153	-	-	-	-	-	-	-
Stage 2	509	160	-	1595	1599	-	-	-	-	-	-	-
Critical Hdwy	7.12	6.52	6.22	7.12	6.52	6.23	4.12	-	-	4.12	-	-
Critical Hdwy Stg 1	6.12	5.52	-	6.12	5.52	-	-	-	-	-	-	-
Critical Hdwy Stg 2	6.12	5.52	-	6.12	5.52	-	-	-	-	-	-	-
Follow-up Hdwy	3.518	4.018	3.318	3.518	4.018	3.327	2.218	-	-	2.218	-	-
Pot Cap-1 Maneuver	38	85	851	67	85	893	1376	-	-	1422	-	-
Stage 1	135	167	-	849	771	-	-	-	-	-	-	-
Stage 2	547	766	-	134	166	-	-	-	-	-	-	-
Platoon blocked, %								-	-		-	-
Mov Cap-1 Maneuver	~ 4	38	851	36	38	893	1376	-	-	1422	-	-
Mov Cap-2 Maneuver	~ 4	38	-	36	38	-	-	-	-	-	-	-
Stage 1	135	74	-	848	770	-	-	-	-	-	-	-
Stage 2	110	765	-	58	74	-	-	-	-	-	-	-

Approach	EB	WB	NB	SB
HCM Control Delay, $	4286.7	278.3	0.1	7.8
HCM LOS	F	F		

Minor Lane/Major Mvmt	NBL	NBT	NBR	EBLn1	WBLn1	SBL	SBT	SBR
Capacity (veh/h)	1376	-	-	5	478	1422	-	-
HCM Lane V/C Ratio	0.001	-	-	7.416	1.547	0.493	-	-
HCM Control Delay (s)	7.6	0	$	4286.7	278.3	10	0	-
HCM Lane LOS	A	A	-	F	F	A	A	-
HCM 95th %tile Q(veh)	0	-	-	6.2	39.7	2.8	-	-

Notes			
~: Volume exceeds capacity	$: Delay exceeds 300s	+: Computation Not Defined	*: All major volume in platoon

Intersection	
Int Delay, s/veh	15

Movement	EBL	EBT	EBR	WBL	WBT	WBR	NBL	NBT	NBR	SBL	SBT	SBR
Lane Configurations												
Traffic Vol, veh/h	11	3	8	10	5	31	3	193	3	59	349	21
Future Vol, veh/h	11	3	8	10	5	31	3	193	3	59	349	21
Conflicting Peds, #/hr	0	0	0	0	0	0	0	0	0	0	0	0
Sign Control	Free	Free	Free	Free	Free	Free	Stop	Stop	Stop	Stop	Stop	Stop
RT Channelized	-	-	None	-	-	None	-	-	None	-	-	None
Storage Length	-	-	-	-	-	-	-	-	-	-	-	-
Veh in Median Storage, #	-	0	-	-	0	-	-	0	-	-	0	-
Grade, %	-	0	-	-	0	-	-	0	-	-	0	-
Peak Hour Factor	85	85	85	85	85	85	85	85	85	85	85	85
Heavy Vehicles, %	2	2	2	14	2	2	2	2	2	2	2	2
Mvmt Flow	13	4	9	12	6	36	4	227	4	69	411	25

Major/Minor	Major1			Major2			Minor1			Minor2		
Conflicting Flow All	42	0	0	13	0	0	301	101	9	198	87	24
Stage 1	-	-	-	-	-	-	35	35	-	48	48	-
Stage 2	-	-	-	-	-	-	266	66	-	150	39	-
Critical Hdwy	4.12	-	-	4.24	-	-	7.12	6.52	6.22	7.12	6.52	6.22
Critical Hdwy Stg 1	-	-	-	-	-	-	6.12	5.52	-	6.12	5.52	-
Critical Hdwy Stg 2	-	-	-	-	-	-	6.12	5.52	-	6.12	5.52	-
Follow-up Hdwy	2.218	-	-	2.326	-	-	3.518	4.018	3.318	3.518	4.018	3.318
Pot Cap-1 Maneuver	1567	-	-	1531	-	-	651	789	1073	761	803	1052
Stage 1	-	-	-	-	-	-	981	866	-	965	855	-
Stage 2	-	-	-	-	-	-	739	840	-	853	862	-
Platoon blocked, %		-	-		-	-						
Mov Cap-1 Maneuver	1567	-	-	1531	-	-	371	776	1073	580	790	1052
Mov Cap-2 Maneuver	-	-	-	-	-	-	371	776	-	580	790	-
Stage 1	-	-	-	-	-	-	973	859	-	957	848	-
Stage 2	-	-	-	-	-	-	369	833	-	620	855	-

Approach	EB	WB	NB	SB
HCM Control Delay, s	3.7	1.6	11.7	18.5
HCM LOS			B	C

Minor Lane/Major Mvmt	NBLn1	EBL	EBT	EBR	WBL	WBT	WBR	SBLn1
Capacity (veh/h)	767	1567	-	-	1531	-	-	761
HCM Lane V/C Ratio	0.305	0.008	-	-	0.008	-	-	0.663
HCM Control Delay (s)	11.7	7.3	0	-	7.4	0	-	18.5
HCM Lane LOS	B	A	A	-	A	A	-	C
HCM 95th %tile Q(veh)	1.3	0	-	-	0	-	-	5.1

Intersection	
Int Delay, s/veh	3.5

Movement	EBL	EBT	EBR	WBL	WBT	WBR	NBL	NBT	NBR	SBL	SBT	SBR
Lane Configurations												
Traffic Vol, veh/h	1	10	0	14	23	31	0	2	3	18	5	1
Future Vol, veh/h	1	10	0	14	23	31	0	2	3	18	5	1
Conflicting Peds, #/hr	0	0	0	0	0	0	0	0	0	0	0	0
Sign Control	Free	Free	Free	Free	Free	Free	Stop	Stop	Stop	Stop	Stop	Stop
RT Channelized	-	-	None	-	-	None	-	-	None	-	-	None
Storage Length	-	-	-	-	-	-	-	-	-	-	-	-
Veh in Median Storage, #	-	0	-	-	0	-	-	0	-	-	0	-
Grade, %	-	0	-	-	0	-	-	0	-	-	0	-
Peak Hour Factor	86	86	86	86	86	86	86	86	86	86	86	86
Heavy Vehicles, %	2	11	2	2	5	2	2	2	2	2	2	2
Mvmt Flow	1	12	0	16	27	36	0	2	3	21	6	1

Major/Minor	Major1			Major2			Minor1			Minor2		
Conflicting Flow All	63	0	0	12	0	0	95	109	12	94	91	45
Stage 1	-	-	-	-	-	-	14	14	-	77	77	-
Stage 2	-	-	-	-	-	-	81	95	-	17	14	-
Critical Hdwy	4.12	-	-	4.12	-	-	7.12	6.52	6.22	7.12	6.52	6.22
Critical Hdwy Stg 1	-	-	-	-	-	-	6.12	5.52	-	6.12	5.52	-
Critical Hdwy Stg 2	-	-	-	-	-	-	6.12	5.52	-	6.12	5.52	-
Follow-up Hdwy	2.218	-	-	2.218	-	-	3.518	4.018	3.318	3.518	4.018	3.318
Pot Cap-1 Maneuver	1540	-	-	1607	-	-	888	781	1069	889	799	1025
Stage 1	-	-	-	-	-	-	1006	884	-	932	831	-
Stage 2	-	-	-	-	-	-	927	816	-	1002	884	-
Platoon blocked, %		-	-		-	-						
Mov Cap-1 Maneuver	1540	-	-	1607	-	-	875	772	1069	877	790	1025
Mov Cap-2 Maneuver	-	-	-	-	-	-	875	772	-	877	790	-
Stage 1	-	-	-	-	-	-	1005	883	-	931	823	-
Stage 2	-	-	-	-	-	-	910	808	-	995	883	-

Approach	EB	WB	NB	SB
HCM Control Delay, s	0.7	1.5	8.9	9.3
HCM LOS			A	A

Minor Lane/Major Mvmt	NBLn1	EBL	EBT	EBR	WBL	WBT	WBR	SBLn1
Capacity (veh/h)	926	1540	-	-	1607	-	-	862
HCM Lane V/C Ratio	0.006	0.001	-	-	0.01	-	-	0.032
HCM Control Delay (s)	8.9	7.3	0	-	7.3	0	-	9.3
HCM Lane LOS	A	A	A	-	A	A	-	A
HCM 95th %tile Q(veh)	0	0	-	-	0	-	-	0.1

Intersection	
Int Delay, s/veh	1.1

Movement	EBL	EBT	EBR	WBL	WBT	WBR	NBL	NBT	NBR	SBL	SBT	SBR
Lane Configurations												
Traffic Vol, veh/h	15	2	16	3	0	5	22	1123	1	7	525	38
Future Vol, veh/h	15	2	16	3	0	5	22	1123	1	7	525	38
Conflicting Peds, #/hr	0	0	0	0	0	0	0	0	0	0	0	0
Sign Control	Stop	Stop	Stop	Stop	Stop	Stop	Free	Free	Free	Free	Free	Free
RT Channelized	-	-	Stop	-	-	Stop	-	-	None	-	-	None
Storage Length	-	-	-	-	-	-	610	-	600	565	-	550
Veh in Median Storage, #	-	0	-	-	0	-	-	0	-	-	0	-
Grade, %	-	0	-	-	0	-	-	0	-	-	0	-
Peak Hour Factor	79	79	79	79	79	79	79	79	79	79	79	79
Heavy Vehicles, %	2	2	2	2	2	2	14	6	2	17	19	6
Mvmt Flow	19	3	20	4	0	6	28	1422	1	9	665	48

Major/Minor	Minor2			Minor1			Major1			Major2		
Conflicting Flow All	1450	2162	333	1830	2209	711	713	0	0	1423	0	0
Stage 1	683	683	-	1478	1478	-	-	-	-	-	-	-
Stage 2	767	1479	-	352	731	-	-	-	-	-	-	-
Critical Hdwy	7.54	6.54	6.94	7.54	6.54	6.94	4.38	-	-	4.44	-	-
Critical Hdwy Stg 1	6.54	5.54	-	6.54	5.54	-	-	-	-	-	-	-
Critical Hdwy Stg 2	6.54	5.54	-	6.54	5.54	-	-	-	-	-	-	-
Follow-up Hdwy	3.52	4.02	3.32	3.52	4.02	3.32	2.34	-	-	2.37	-	-
Pot Cap-1 Maneuver	92	47	663	48	44	375	807	-	-	405	-	-
Stage 1	405	447	-	132	188	-	-	-	-	-	-	-
Stage 2	361	188	-	638	425	-	-	-	-	-	-	-
Platoon blocked, %								-	-		-	-
Mov Cap-1 Maneuver	87	44	663	43	42	375	807	-	-	405	-	-
Mov Cap-2 Maneuver	87	44	-	43	42	-	-	-	-	-	-	-
Stage 1	391	437	-	127	181	-	-	-	-	-	-	-
Stage 2	343	181	-	601	416	-	-	-	-	-	-	-

Approach	EB	WB	NB	SB
HCM Control Delay, s	37.7	39.3	0.2	0.2
HCM LOS	E	E		

Minor Lane/Major Mvmt	NBL	NBT	NBR	EBLn1	WBLn1	SBL	SBT	SBR
Capacity (veh/h)	807	-	-	151	115	405	-	-
HCM Lane V/C Ratio	0.035	-	-	0.277	0.088	0.022	-	-
HCM Control Delay (s)	9.6	-	-	37.7	39.3	14.1	-	-
HCM Lane LOS	A	-	-	E	E	B	-	-
HCM 95th %tile Q(veh)	0.1	-	-	1.1	0.3	0.1	-	-

Intersection	
Int Delay, s/veh	4

Movement	EBL	EBR	NBL	NBT	SBT	SBR
Lane Configurations						
Traffic Vol, veh/h	127	4	8	39	59	217
Future Vol, veh/h	127	4	8	39	59	217
Conflicting Peds, #/hr	0	0	0	0	0	0
Sign Control	Stop	Stop	Free	Free	Free	Free
RT Channelized	-	None	-	None	-	None
Storage Length	0	-	-	-	-	-
Veh in Median Storage, #	0	-	-	0	0	-
Grade, %	0	-	-	0	0	-
Peak Hour Factor	64	64	64	64	64	64
Heavy Vehicles, %	2	2	2	2	2	2
Mvmt Flow	198	6	13	61	92	339

Major/Minor	Minor2		Major1		Major2	
Conflicting Flow All	349	262	431	0	-	0
Stage 1	262	-	-	-	-	-
Stage 2	87	-	-	-	-	-
Critical Hdwy	6.42	6.22	4.12	-	-	-
Critical Hdwy Stg 1	5.42	-	-	-	-	-
Critical Hdwy Stg 2	5.42	-	-	-	-	-
Follow-up Hdwy	3.518	3.318	2.218	-	-	-
Pot Cap-1 Maneuver	648	777	1129	-	-	-
Stage 1	782	-	-	-	-	-
Stage 2	936	-	-	-	-	-
Platoon blocked, %				-	-	-
Mov Cap-1 Maneuver	640	777	1129	-	-	-
Mov Cap-2 Maneuver	640	-	-	-	-	-
Stage 1	773	-	-	-	-	-
Stage 2	936	-	-	-	-	-

Approach	EB	NB	SB
HCM Control Delay, s	13.2	1.4	0
HCM LOS	B		

Minor Lane/Major Mvmt	NBL	NBT	EBLn1	SBT	SBR
Capacity (veh/h)	1129	-	643	-	-
HCM Lane V/C Ratio	0.011	-	0.318	-	-
HCM Control Delay (s)	8.2	0	13.2	-	-
HCM Lane LOS	A	A	B	-	-
HCM 95th %tile Q(veh)	0	-	1.4	-	-

Intersection	
Int Delay, s/veh	2.8

Movement	EBL	EBR	NBL	NBT	SBT	SBR
Lane Configurations						
Traffic Vol, veh/h	27	4	6	20	18	45
Future Vol, veh/h	27	4	6	20	18	45
Conflicting Peds, #/hr	0	0	0	0	0	0
Sign Control	Stop	Stop	Free	Free	Free	Free
RT Channelized	-	None	-	None	-	None
Storage Length	0	-	-	-	-	-
Veh in Median Storage, #	0	-	-	0	0	-
Grade, %	0	-	-	0	0	-
Peak Hour Factor	64	64	64	64	64	64
Heavy Vehicles, %	2	2	2	2	2	2
Mvmt Flow	42	6	9	31	28	70

Major/Minor	Minor2		Major1		Major2	
Conflicting Flow All	112	63	98	0	-	0
Stage 1	63	-	-	-	-	-
Stage 2	49	-	-	-	-	-
Critical Hdwy	6.42	6.22	4.12	-	-	-
Critical Hdwy Stg 1	5.42	-	-	-	-	-
Critical Hdwy Stg 2	5.42	-	-	-	-	-
Follow-up Hdwy	3.518	3.318	2.218	-	-	-
Pot Cap-1 Maneuver	885	1002	1495	-	-	-
Stage 1	960	-	-	-	-	-
Stage 2	973	-	-	-	-	-
Platoon blocked, %				-	-	-
Mov Cap-1 Maneuver	880	1002	1495	-	-	-
Mov Cap-2 Maneuver	880	-	-	-	-	-
Stage 1	954	-	-	-	-	-
Stage 2	973	-	-	-	-	-

Approach	EB	NB	SB
HCM Control Delay, s	9.3	1.7	0
HCM LOS	A		

Minor Lane/Major Mvmt	NBL	NBT	EBLn1	SBT	SBR
Capacity (veh/h)	1495	-	894	-	-
HCM Lane V/C Ratio	0.006	-	0.054	-	-
HCM Control Delay (s)	7.4	0	9.3	-	-
HCM Lane LOS	A	A	A	-	-
HCM 95th %tile Q(veh)	0	-	0.2	-	-

MOVEMENT SUMMARY

Site: 1 [1. SR 124 / US Highway 12 Westbound Ramp (2028-AM-With_Both_Projects) (Site Folder: 2028-AM-With_Both_Projects)]

SR 124 / US Highway 12 Westbound Ramp
Site Category: (None)
Roundabout

Vehicle Movement Performance

Mov ID	Turn	INPUT VOLUMES [Total veh/h	HV] %	DEMAND FLOWS [Total veh/h	HV] %	Deg. Satn v/c	Aver. Delay sec	Level of Service	95% BACK OF QUEUE [Veh. veh	Dist] ft	Prop. Que	Effective Stop Rate	Aver. No. Cycles	Aver. Speed mph
South: SR 124														
3u	U	1	2.0	1	2.0	0.647	11.2	LOS B	0.0	0.0	0.00	0.64	0.00	34.9
3	L2	717	9.0	864	9.0	0.647	9.3	LOS A	0.0	0.0	0.00	0.64	0.00	34.1
8	T1	222	8.0	267	8.0	0.647	5.0	LOS A	0.0	0.0	0.00	0.64	0.00	34.4
Approach		940	8.8	1133	8.8	0.647	8.3	LOS A	0.0	0.0	0.00	0.64	0.00	34.2
East: US Highway 12 Westbound Ramp														
1	L2	127	9.0	153	9.0	0.433	28.9	LOS C	3.0	81.0	0.91	1.08	1.19	24.3
16	R2	7	17.0	8	17.0	0.433	26.1	LOS C	3.0	81.0	0.91	1.08	1.19	23.9
Approach		134	9.4	161	9.4	0.433	28.8	LOS C	3.0	81.0	0.91	1.08	1.19	24.2
North: SR 124														
4	T1	111	6.0	134	6.0	0.236	14.2	LOS B	1.5	39.9	0.86	0.88	0.86	31.6
14	R2	153	5.0	184	5.0	0.257	11.1	LOS B	1.5	39.6	0.76	0.84	0.76	32.3
Approach		264	5.4	318	5.4	0.257	12.4	LOS B	1.5	39.9	0.80	0.86	0.80	32.0
All Vehicles		1338	8.2	1612	8.2	0.647	11.2	LOS B	3.0	81.0	0.25	0.73	0.28	32.4

Site Level of Service (LOS) Method: Delay & Degree of Saturation (SIDRA). Site LOS Method is specified in the Parameter Settings dialog (Site tab).
Roundabout LOS Method: Same as Signalised Intersections.
Vehicle movement LOS values are based on average delay and v/c ratio (degree of saturation) per movement.
Intersection and Approach LOS values are based on average delay for all movements (v/c not used).
Roundabout Capacity Model: SIDRA Standard.
Delay Model: SIDRA Standard (Geometric Delay is included).
Queue Model: HCM Queue Formula.
Gap-Acceptance Capacity: SIDRA Standard (Akçelik M3D).
HV (%) values are calculated for All Movement Classes of All Heavy Vehicle Model Designation.

MOVEMENT SUMMARY

Site: 1 [2. SR 124 and 5th Avenue / Gateway Road and US Highway 12 Eastbound Ramp (2028-AM-With_Both_Projects (Site Folder: 2028-AM-With_Both_Projects)]

SR 124 and 5th Avenue / Gateway Road and US Highway 12 Eastbound Ramp
Site Category: (None)
Roundabout

Vehicle Movement Performance

Mov ID	Turn	INPUT VOLUMES [Total veh/h	HV] %	DEMAND FLOWS [Total veh/h	HV] %	Deg. Satn v/c	Aver. Delay sec	Level of Service	95% BACK OF QUEUE [Veh. veh	Dist] ft	Prop. Que	Effective Stop Rate	Aver. No. Cycles	Aver. Speed mph
South: 5th Avenue														
3	L2	10	2.0	12	2.0	0.859	10.3	LOS D	15.0	389.9	0.93	0.75	1.04	24.0
8	T1	692	3.0	814	3.0	0.859	6.3	LOS D	15.0	389.9	0.93	0.75	1.04	23.9
18	R2	41	33.0	48	33.0	0.859	9.5	LOS D	15.0	389.9	0.93	0.75	1.04	24.1
Approach		743	4.6	874	4.6	0.859	6.6	LOS A	15.0	389.9	0.93	0.75	1.04	23.9
East: US Highway 12 Westbound Ramp														
1	L2	582	2.0	685	2.0	1.470	234.5	LOS F	101.1	2568.1	1.00	4.05	8.30	7.5
6	T1	125	2.0	147	2.0	1.470	230.3	LOS F	101.1	2568.1	1.00	4.05	8.30	7.5
16	R2	162	10.0	191	10.0	0.125	3.5	LOS A	0.0	0.0	0.00	0.48	0.00	32.6
Approach		869	3.5	1022	3.5	1.470	190.9	LOS F	101.1	2568.1	0.81	3.38	6.75	8.8
North: SR 124														
7	L2	8	2.0	9	2.0	0.453	12.6	LOS B	2.8	77.8	0.75	0.87	0.81	34.0
4	T1	198	7.0	233	7.0	0.453	8.6	LOS A	2.8	77.8	0.75	0.87	0.81	34.1
14	R2	33	50.0	39	50.0	0.453	11.3	LOS B	2.8	77.8	0.75	0.87	0.81	32.0
Approach		239	12.8	281	12.8	0.453	9.1	LOS A	2.8	77.8	0.75	0.87	0.81	33.8
West: Gateway Road														
5	L2	86	20.0	101	20.0	0.274	11.4	LOS B	1.4	42.7	0.75	0.88	0.75	22.8
2	T1	9	100.0	11	100.0	0.274	14.2	LOS B	1.4	42.7	0.75	0.88	0.75	22.7
12	R2	8	17.0	9	17.0	0.274	7.7	LOS A	1.4	42.7	0.75	0.88	0.75	22.3
Approach		103	26.8	121	26.8	0.274	11.3	LOS B	1.4	42.7	0.75	0.88	0.75	22.8
All Vehicles		1954	6.3	2299	6.3	1.470	89.1	LOS F	101.1	2568.1	0.85	1.94	3.54	13.8

Site Level of Service (LOS) Method: Delay & Degree of Saturation (SIDRA). Site LOS Method is specified in the Parameter Settings dialog (Site tab).
Roundabout LOS Method: Same as Signalised Intersections.
Vehicle movement LOS values are based on average delay and v/c ratio (degree of saturation) per movement.
Intersection and Approach LOS values are based on average delay for all movements (v/c not used).
Roundabout Capacity Model: SIDRA Standard.
Delay Model: SIDRA Standard (Geometric Delay is included).
Queue Model: HCM Queue Formula.
Gap-Acceptance Capacity: SIDRA Standard (Akçelik M3D).
HV (%) values are calculated for All Movement Classes of All Heavy Vehicle Model Designation.

Intersection	
Int Delay, s/veh	78.9

Movement	EBL	EBT	EBR	WBL	WBT	WBR	NBL	NBT	NBR	SBL	SBT	SBR
Lane Configurations												
Traffic Vol, veh/h	6	1	1	7	2	601	2	150	13	543	219	28
Future Vol, veh/h	6	1	1	7	2	601	2	150	13	543	219	28
Conflicting Peds, #/hr	0	0	0	0	0	0	0	0	0	0	0	0
Sign Control	Stop	Stop	Stop	Stop	Stop	Stop	Free	Free	Free	Free	Free	Free
RT Channelized	-	-	None	-	-	None	-	-	None	-	-	None
Storage Length	-	-	-	-	-	-	-	-	-	-	-	-
Veh in Median Storage, #	-	0	-	-	0	-	-	0	-	-	0	-
Grade, %	-	0	-	-	0	-	-	0	-	-	0	-
Peak Hour Factor	81	81	81	81	81	81	81	81	81	81	81	81
Heavy Vehicles, %	2	2	2	2	2	8	2	2	2	6	2	2
Mvmt Flow	7	1	1	9	2	742	2	185	16	670	270	35

Major/Minor	Minor2			Minor1			Major1			Major2		
Conflicting Flow All	2197	1833	288	1826	1842	193	305	0	0	201	0	0
Stage 1	1628	1628	-	197	197	-	-	-	-	-	-	-
Stage 2	569	205	-	1629	1645	-	-	-	-	-	-	-
Critical Hdwy	7.12	6.52	6.22	7.12	6.52	6.28	4.12	-	-	4.16	-	-
Critical Hdwy Stg 1	6.12	5.52	-	6.12	5.52	-	-	-	-	-	-	-
Critical Hdwy Stg 2	6.12	5.52	-	6.12	5.52	-	-	-	-	-	-	-
Follow-up Hdwy	3.518	4.018	3.318	3.518	4.018	3.372	2.218	-	-	2.254	-	-
Pot Cap-1 Maneuver	32	76	751	59	75	833	1256	-	-	1347	-	-
Stage 1	128	160	-	805	738	-	-	-	-	-	-	-
Stage 2	507	732	-	128	157	-	-	-	-	-	-	-
Platoon blocked, %								-	-		-	-
Mov Cap-1 Maneuver	~ 2	30	751	30	30	833	1256	-	-	1347	-	-
Mov Cap-2 Maneuver	~ 2	30	-	30	30	-	-	-	-	-	-	-
Stage 1	128	64	-	803	737	-	-	-	-	-	-	-
Stage 2	55	731	-	50	62	-	-	-	-	-	-	-

Approach	EB	WB	NB	SB
HCM Control Delay, $	3150.3	152.8	0.1	7.1
HCM LOS	F	F		

Minor Lane/Major Mvmt	NBL	NBT	NBR	EBLn1	WBLn1	SBL	SBT	SBR
Capacity (veh/h)	1256	-	-	3	597	1347	-	-
HCM Lane V/C Ratio	0.002	-	-	3.292	1.261	0.498	-	-
HCM Control Delay (s)	7.9	0	-	$ 3150.3	152.8	10.3	0	-
HCM Lane LOS	A	A	-	F	F	B	A	-
HCM 95th %tile Q(veh)	0	-	-	2.4	29.2	2.9	-	-

Notes

~: Volume exceeds capacity $: Delay exceeds 300s +: Computation Not Defined *: All major volume in platoon

Intersection	
Int Delay, s/veh	57.4

Movement	EBL	EBT	EBR	WBL	WBT	WBR	NBL	NBT	NBR	SBL	SBT	SBR
Lane Configurations												
Traffic Vol, veh/h	38	2	2	5	3	74	2	501	2	25	175	11
Future Vol, veh/h	38	2	2	5	3	74	2	501	2	25	175	11
Conflicting Peds, #/hr	0	0	0	0	0	0	0	0	0	0	0	0
Sign Control	Free	Free	Free	Free	Free	Free	Stop	Stop	Stop	Stop	Stop	Stop
RT Channelized	-	-	None	-	-	None	-	-	None	-	-	None
Storage Length	-	-	-	-	-	-	-	-	-	-	-	-
Veh in Median Storage, #	-	0	-	-	0	-	-	0	-	-	0	-
Grade, %	-	0	-	-	0	-	-	0	-	-	0	-
Peak Hour Factor	72	72	72	72	72	72	72	72	72	72	72	72
Heavy Vehicles, %	6	2	2	2	2	5	100	7	2	2	2	2
Mvmt Flow	53	3	3	7	4	103	3	696	3	35	243	15

Major/Minor	Major1			Major2			Minor1			Minor2		
Conflicting Flow All	107	0	0	6	0	0	310	232	5	530	182	56
Stage 1	-	-	-	-	-	-	111	111	-	70	70	-
Stage 2	-	-	-	-	-	-	199	121	-	460	112	-
Critical Hdwy	4.16	-	-	4.12	-	-	8.1	6.57	6.22	7.12	6.52	6.22
Critical Hdwy Stg 1	-	-	-	-	-	-	7.1	5.57	-	6.12	5.52	-
Critical Hdwy Stg 2	-	-	-	-	-	-	7.1	5.57	-	6.12	5.52	-
Follow-up Hdwy	2.254	-	-	2.218	-	-	4.4	4.063	3.318	3.518	4.018	3.318
Pot Cap-1 Maneuver	1459	-	-	1615	-	-	489	~ 659	1078	460	712	1011
Stage 1	-	-	-	-	-	-	703	794	-	940	837	-
Stage 2	-	-	-	-	-	-	623	786	-	581	803	-
Platoon blocked, %		-	-		-	-						
Mov Cap-1 Maneuver	1459	-	-	1615	-	-	338	~ 632	1078	-	683	1011
Mov Cap-2 Maneuver	-	-	-	-	-	-	338	~ 632	-	-	683	-
Stage 1	-	-	-	-	-	-	678	765	-	906	833	-
Stage 2	-	-	-	-	-	-	432	782	-	51	774	-

Approach	EB	WB	NB	SB
HCM Control Delay, s	6.8	0.4	94.8	
HCM LOS			F	-

Minor Lane/Major Mvmt	NBLn1	EBL	EBT	EBR	WBL	WBT	WBR	SBLn1
Capacity (veh/h)	631	1459	-	-	1615	-	-	-
HCM Lane V/C Ratio	1.112	0.036	-	-	0.004	-	-	-
HCM Control Delay (s)	94.8	7.6	0	-	7.2	0	-	-
HCM Lane LOS	F	A	A	-	A	A	-	-
HCM 95th %tile Q(veh)	21.2	0.1	-	-	0	-	-	-

Notes

~: Volume exceeds capacity $: Delay exceeds 300s +: Computation Not Defined *: All major volume in platoon

Intersection	
Int Delay, s/veh	5.6

Movement	EBL	EBT	EBR	WBL	WBT	WBR	NBL	NBT	NBR	SBL	SBT	SBR
Lane Configurations												
Traffic Vol, veh/h	5	13	0	1	3	14	0	2	8	31	3	1
Future Vol, veh/h	5	13	0	1	3	14	0	2	8	31	3	1
Conflicting Peds, #/hr	0	0	0	0	0	0	0	0	0	0	0	0
Sign Control	Free	Free	Free	Free	Free	Free	Stop	Stop	Stop	Stop	Stop	Stop
RT Channelized	-	-	None	-	-	None	-	-	None	-	-	None
Storage Length	-	-	-	-	-	-	-	-	-	-	-	-
Veh in Median Storage, #	-	0	-	-	0	-	-	0	-	-	0	-
Grade, %	-	0	-	-	0	-	-	0	-	-	0	-
Peak Hour Factor	77	77	77	77	77	77	77	77	77	77	77	77
Heavy Vehicles, %	2	2	2	100	33	20	2	50	2	2	2	2
Mvmt Flow	6	17	0	1	4	18	0	3	10	40	4	1

Major/Minor	Major1			Major2			Minor1			Minor2		
Conflicting Flow All	22	0	0	17	0	0	47	53	17	51	44	13
Stage 1	-	-	-	-	-	-	29	29	-	15	15	-
Stage 2	-	-	-	-	-	-	18	24	-	36	29	-
Critical Hdwy	4.12	-	-	5.1	-	-	7.12	7	6.22	7.12	6.52	6.22
Critical Hdwy Stg 1	-	-	-	-	-	-	6.12	6	-	6.12	5.52	-
Critical Hdwy Stg 2	-	-	-	-	-	-	6.12	6	-	6.12	5.52	-
Follow-up Hdwy	2.218	-	-	3.1	-	-	3.518	4.45	3.318	3.518	4.018	3.318
Pot Cap-1 Maneuver	1593	-	-	1142	-	-	954	754	1062	948	848	1067
Stage 1	-	-	-	-	-	-	988	785	-	1005	883	-
Stage 2	-	-	-	-	-	-	1001	789	-	980	871	-
Platoon blocked, %		-	-		-	-						
Mov Cap-1 Maneuver	1593	-	-	1142	-	-	945	750	1062	933	844	1067
Mov Cap-2 Maneuver	-	-	-	-	-	-	945	750	-	933	844	-
Stage 1	-	-	-	-	-	-	984	782	-	1001	882	-
Stage 2	-	-	-	-	-	-	994	788	-	963	868	-

Approach	EB	WB	NB	SB
HCM Control Delay, s	2	0.5	8.7	9.1
HCM LOS			A	A

Minor Lane/Major Mvmt	NBLn1	EBL	EBT	EBR	WBL	WBT	WBR	SBLn1
Capacity (veh/h)	980	1593	-	-	1142	-	-	928
HCM Lane V/C Ratio	0.013	0.004	-	-	0.001	-	-	0.049
HCM Control Delay (s)	8.7	7.3	0	-	8.2	0	-	9.1
HCM Lane LOS	A	A	A	-	A	A	-	A
HCM 95th %tile Q(veh)	0	0	-	-	0	-	-	0.2

Intersection	
Int Delay, s/veh	0.7

Movement	EBL	EBT	EBR	WBL	WBT	WBR	NBL	NBT	NBR	SBL	SBT	SBR
Lane Configurations												
Traffic Vol, veh/h	17	0	30	1	0	5	15	441	0	6	413	5
Future Vol, veh/h	17	0	30	1	0	5	15	441	0	6	413	5
Conflicting Peds, #/hr	0	0	0	0	0	0	0	0	0	0	0	0
Sign Control	Stop	Stop	Stop	Stop	Stop	Stop	Free	Free	Free	Free	Free	Free
RT Channelized	-	-	Stop	-	-	Stop	-	-	None	-	-	None
Storage Length	-	-	-	-	-	-	610	-	600	565	-	550
Veh in Median Storage, #	-	0	-	-	0	-	-	0	-	-	0	-
Grade, %	-	0	-	-	0	-	-	0	-	-	0	-
Peak Hour Factor	90	90	90	90	90	90	90	90	90	90	90	90
Heavy Vehicles, %	7	2	2	2	2	2	33	13	2	2	15	25
Mvmt Flow	19	0	33	1	0	6	17	490	0	7	459	6

Major/Minor	Minor2			Minor1			Major1			Major2		
Conflicting Flow All	752	997	230	768	1003	245	465	0	0	490	0	0
Stage 1	473	473	-	524	524	-	-	-	-	-	-	-
Stage 2	279	524	-	244	479	-	-	-	-	-	-	-
Critical Hdwy	7.64	6.54	6.94	7.54	6.54	6.94	4.76	-	-	4.14	-	-
Critical Hdwy Stg 1	6.64	5.54	-	6.54	5.54	-	-	-	-	-	-	-
Critical Hdwy Stg 2	6.64	5.54	-	6.54	5.54	-	-	-	-	-	-	-
Follow-up Hdwy	3.57	4.02	3.32	3.52	4.02	3.32	2.53	-	-	2.22	-	-
Pot Cap-1 Maneuver	290	243	772	291	241	755	902	-	-	1070	-	-
Stage 1	528	557	-	504	528	-	-	-	-	-	-	-
Stage 2	690	528	-	738	553	-	-	-	-	-	-	-
Platoon blocked, %								-	-		-	-
Mov Cap-1 Maneuver	282	237	772	273	235	755	902	-	-	1070	-	-
Mov Cap-2 Maneuver	282	237	-	273	235	-	-	-	-	-	-	-
Stage 1	518	553	-	494	518	-	-	-	-	-	-	-
Stage 2	672	518	-	702	549	-	-	-	-	-	-	-

Approach	EB	WB	NB	SB
HCM Control Delay, s	9.9	9	0.3	0.1
HCM LOS	A	A		

Minor Lane/Major Mvmt	NBL	NBT	NBR	EBLn1	WBLn1	SBL	SBT	SBR
Capacity (veh/h)	902	-	-	780	906	1070	-	-
HCM Lane V/C Ratio	0.018	-	-	0.067	0.007	0.006	-	-
HCM Control Delay (s)	9.1	-	-	9.9	9	8.4	-	-
HCM Lane LOS	A	-	-	A	A	A	-	-
HCM 95th %tile Q(veh)	0.1	-	-	0.2	0	0	-	-

Intersection	
Int Delay, s/veh	6.4

Movement	EBL	EBR	NBL	NBT	SBT	SBR
Lane Configurations						
Traffic Vol, veh/h	182	6	2	60	33	64
Future Vol, veh/h	182	6	2	60	33	64
Conflicting Peds, #/hr	0	0	0	0	0	0
Sign Control	Stop	Stop	Free	Free	Free	Free
RT Channelized	-	None	-	None	-	None
Storage Length	0	-	-	-	-	-
Veh in Median Storage, #	0	-	-	0	0	-
Grade, %	0	-	-	0	0	-
Peak Hour Factor	69	69	69	69	69	69
Heavy Vehicles, %	2	2	2	19	2	2
Mvmt Flow	264	9	3	87	48	93

Major/Minor	Minor2		Major1		Major2	
Conflicting Flow All	188	95	141	0	-	0
Stage 1	95	-	-	-	-	-
Stage 2	93	-	-	-	-	-
Critical Hdwy	6.42	6.22	4.12	-	-	-
Critical Hdwy Stg 1	5.42	-	-	-	-	-
Critical Hdwy Stg 2	5.42	-	-	-	-	-
Follow-up Hdwy	3.518	3.318	2.218	-	-	-
Pot Cap-1 Maneuver	801	962	1442	-	-	-
Stage 1	929	-	-	-	-	-
Stage 2	931	-	-	-	-	-
Platoon blocked, %				-	-	-
Mov Cap-1 Maneuver	799	962	1442	-	-	-
Mov Cap-2 Maneuver	799	-	-	-	-	-
Stage 1	927	-	-	-	-	-
Stage 2	931	-	-	-	-	-

Approach	EB	NB	SB
HCM Control Delay, s	11.8	0.2	0
HCM LOS	B		

Minor Lane/Major Mvmt	NBL	NBT	EBLn1	SBT	SBR
Capacity (veh/h)	1442	-	803	-	-
HCM Lane V/C Ratio	0.002	-	0.339	-	-
HCM Control Delay (s)	7.5	0	11.8	-	-
HCM Lane LOS	A	A	B	-	-
HCM 95th %tile Q(veh)	0	-	1.5	-	-

Intersection	
Int Delay, s/veh	3.9

Movement	EBL	EBR	NBL	NBT	SBT	SBR
Lane Configurations						
Traffic Vol, veh/h	38	6	2	24	26	13
Future Vol, veh/h	38	6	2	24	26	13
Conflicting Peds, #/hr	0	0	0	0	0	0
Sign Control	Stop	Stop	Free	Free	Free	Free
RT Channelized	-	None	-	None	-	None
Storage Length	0	-	-	-	-	-
Veh in Median Storage, #	0	-	-	0	0	-
Grade, %	0	-	-	0	0	-
Peak Hour Factor	69	69	69	69	69	69
Heavy Vehicles, %	2	2	2	16	2	2
Mvmt Flow	55	9	3	35	38	19

Major/Minor	Minor2		Major1		Major2	
Conflicting Flow All	89	48	57	0	-	0
Stage 1	48	-	-	-	-	-
Stage 2	41	-	-	-	-	-
Critical Hdwy	6.42	6.22	4.12	-	-	-
Critical Hdwy Stg 1	5.42	-	-	-	-	-
Critical Hdwy Stg 2	5.42	-	-	-	-	-
Follow-up Hdwy	3.518	3.318	2.218	-	-	-
Pot Cap-1 Maneuver	912	1021	1547	-	-	-
Stage 1	974	-	-	-	-	-
Stage 2	981	-	-	-	-	-
Platoon blocked, %				-	-	-
Mov Cap-1 Maneuver	910	1021	1547	-	-	-
Mov Cap-2 Maneuver	910	-	-	-	-	-
Stage 1	972	-	-	-	-	-
Stage 2	981	-	-	-	-	-

Approach	EB	NB	SB
HCM Control Delay, s	9.2	0.6	0
HCM LOS	A		

Minor Lane/Major Mvmt	NBL	NBT	EBLn1	SBT	SBR
Capacity (veh/h)	1547	-	924	-	-
HCM Lane V/C Ratio	0.002	-	0.069	-	-
HCM Control Delay (s)	7.3	0	9.2	-	-
HCM Lane LOS	A	A	A	-	-
HCM 95th %tile Q(veh)	0	-	0.2	-	-

MOVEMENT SUMMARY

Site: 1 [1. SR 124 / US Highway 12 Westbound Ramp (2028-PM-With_Both_Projects) (Site Folder: 2028-PM-With_Both_Projects)]

SR 124 / US Highway 12 Westbound Ramp
Site Category: (None)
Roundabout

Vehicle Movement Performance

Mov ID	Turn	INPUT VOLUMES [Total veh/h	HV] %	DEMAND FLOWS [Total veh/h	HV] %	Deg. Satn v/c	Aver. Delay sec	Level of Service	95% BACK OF QUEUE [Veh. veh	Dist] ft	Prop. Que	Effective Stop Rate	Aver. No. Cycles	Aver. Speed mph
South: SR 124														
3u	U	3	6.0	3	6.0	0.722	11.3	LOS B	0.0	0.0	0.00	0.64	0.00	34.7
3	L2	832	4.0	967	4.0	0.722	9.4	LOS A	0.0	0.0	0.00	0.64	0.00	34.3
8	T1	308	2.0	358	2.0	0.722	5.1	LOS A	0.0	0.0	0.00	0.64	0.00	34.5
Approach		1143	3.5	1329	3.5	0.722	8.2	LOS A	0.0	0.0	0.00	0.64	0.00	34.4
East: US Highway 12 Westbound Ramp														
1	L2	104	11.0	121	11.0	0.450	40.8	LOS D	3.3	89.1	0.95	1.13	1.34	21.6
16	R2	6	2.0	7	2.0	0.450	34.4	LOS C	3.3	89.1	0.95	1.13	1.34	21.4
Approach		110	10.5	128	10.5	0.450	40.4	LOS D	3.3	89.1	0.95	1.13	1.34	21.6
North: SR 124														
4	T1	81	11.0	94	11.0	0.184	15.3	LOS B	1.1	30.9	0.85	0.87	0.85	31.1
14	R2	545	3.0	634	3.0	0.914	42.0	LOS D	20.7	529.6	1.00	1.71	2.89	22.3
Approach		626	4.0	728	4.0	0.914	38.6	LOS D	20.7	529.6	0.98	1.60	2.62	23.1
All Vehicles		1879	4.1	2185	4.1	0.914	20.2	LOS C	20.7	529.6	0.38	0.99	0.95	28.8

Site Level of Service (LOS) Method: Delay & Degree of Saturation (SIDRA). Site LOS Method is specified in the Parameter Settings dialog (Site tab).
Roundabout LOS Method: Same as Signalised Intersections.
Vehicle movement LOS values are based on average delay and v/c ratio (degree of saturation) per movement.
Intersection and Approach LOS values are based on average delay for all movements (v/c not used).
Roundabout Capacity Model: SIDRA Standard.
Delay Model: SIDRA Standard (Geometric Delay is included).
Queue Model: HCM Queue Formula.
Gap-Acceptance Capacity: SIDRA Standard (Akçelik M3D).
HV (%) values are calculated for All Movement Classes of All Heavy Vehicle Model Designation.

MOVEMENT SUMMARY

Site: 1 [2. SR 124 and 5th Avenue / Gateway Road and US Highway 12 Eastbound Ramp (2028-PM-With_Both_Projects (Site Folder: 2028-PM-With_Both_Projects)]

SR 124 and 5th Avenue / Gateway Road and US Highway 12 Eastbound Ramp
Site Category: (None)
Roundabout

Vehicle Movement Performance

Mov ID	Turn	INPUT VOLUMES [Total veh/h	HV] %	DEMAND FLOWS [Total veh/h	HV] %	Deg. Satn v/c	Aver. Delay sec	Level of Service	95% BACK OF QUEUE [Veh. veh	Dist] ft	Prop. Que	Effective Stop Rate	Aver. No. Cycles	Aver. Speed mph
South: 5th Avenue														
3	L2	3	2.0	3	2.0	0.969	20.6	LOS E	29.6	753.1	1.00	1.15	1.50	21.6
8	T1	764	2.0	813	2.0	0.969	16.6	LOS E	29.6	753.1	1.00	1.15	1.50	21.5
18	R2	153	2.0	163	2.0	0.969	17.1	LOS E	29.6	753.1	1.00	1.15	1.50	21.2
Approach		920	2.0	979	2.0	0.969	16.7	LOS B	29.6	753.1	1.00	1.15	1.50	21.5
East: US Highway 12 Westbound Ramp														
1	L2	833	2.0	886	2.0	1.779	370.2	LOS F	152.0	3873.6	1.00	4.92	10.40	5.2
6	T1	77	7.0	82	7.0	1.779	366.2	LOS F	152.0	3873.6	1.00	4.92	10.40	5.2
16	R2	229	6.0	244	6.0	0.154	3.5	LOS A	0.0	0.0	0.00	0.48	0.00	32.6
Approach		1139	3.1	1212	3.1	1.779	296.2	LOS F	152.0	3873.6	0.80	4.02	8.31	6.2
North: SR 124														
7	L2	5	25.0	5	25.0	0.296	12.7	LOS B	1.6	42.6	0.67	0.75	0.67	33.6
4	T1	170	4.0	181	4.0	0.296	7.4	LOS A	1.6	42.6	0.67	0.75	0.67	34.6
14	R2	19	17.0	20	17.0	0.296	7.9	LOS A	1.6	42.6	0.67	0.75	0.67	33.4
Approach		194	5.8	206	5.8	0.296	7.6	LOS A	1.6	42.6	0.67	0.75	0.67	34.4
West: Gateway Road														
5	L2	138	4.0	147	4.0	0.313	10.1	LOS B	1.8	47.5	0.77	0.86	0.77	23.3
2	T1	30	2.0	32	2.0	0.313	6.0	LOS A	1.8	47.5	0.77	0.86	0.77	23.2
12	R2	9	2.0	10	2.0	0.313	6.5	LOS A	1.8	47.5	0.77	0.86	0.77	22.8
Approach		177	3.6	188	3.6	0.313	9.2	LOS A	1.8	47.5	0.77	0.86	0.77	23.3
All Vehicles		2430	3.0	2585	3.0	1.779	146.4	LOS F	152.0	3873.6	0.86	2.44	4.57	10.1

Site Level of Service (LOS) Method: Delay & Degree of Saturation (SIDRA). Site LOS Method is specified in the Parameter Settings dialog (Site tab).
Roundabout LOS Method: Same as Signalised Intersections.
Vehicle movement LOS values are based on average delay and v/c ratio (degree of saturation) per movement.
Intersection and Approach LOS values are based on average delay for all movements (v/c not used).
Roundabout Capacity Model: SIDRA Standard.
Delay Model: SIDRA Standard (Geometric Delay is included).
Queue Model: HCM Queue Formula.
Gap-Acceptance Capacity: SIDRA Standard (Akçelik M3D).
HV (%) values are calculated for All Movement Classes of All Heavy Vehicle Model Designation.

Intersection	
Int Delay, s/veh	506.8

Movement	EBL	EBT	EBR	WBL	WBT	WBR	NBL	NBT	NBR	SBL	SBT	SBR
Lane Configurations												
Traffic Vol, veh/h	29	2	2	23	1	762	1	127	13	842	164	12
Future Vol, veh/h	29	2	2	23	1	762	1	127	13	842	164	12
Conflicting Peds, #/hr	0	0	0	0	0	0	0	0	0	0	0	0
Sign Control	Stop	Stop	Stop	Stop	Stop	Stop	Free	Free	Free	Free	Free	Free
RT Channelized	-	-	None	-	-	None	-	-	None	-	-	None
Storage Length	-	-	-	-	-	-	-	-	-	-	-	-
Veh in Median Storage, #	-	0	-	-	0	-	-	0	-	-	0	-
Grade, %	-	0	-	-	0	-	-	0	-	-	0	-
Peak Hour Factor	89	89	89	89	89	89	89	89	89	89	89	89
Heavy Vehicles, %	2	2	2	2	2	3	2	2	2	2	3	2
Mvmt Flow	33	2	2	26	1	856	1	143	15	946	184	13

Major/Minor	Minor2			Minor1			Major1			Major2		
Conflicting Flow All	2664	2243	191	2238	2242	151	197	0	0	158	0	0
Stage 1	2083	2083	-	153	153	-	-	-	-	-	-	-
Stage 2	581	160	-	2085	2089	-	-	-	-	-	-	-
Critical Hdwy	7.12	6.52	6.22	7.12	6.52	6.23	4.12	-	-	4.12	-	-
Critical Hdwy Stg 1	6.12	5.52	-	6.12	5.52	-	-	-	-	-	-	-
Critical Hdwy Stg 2	6.12	5.52	-	6.12	5.52	-	-	-	-	-	-	-
Follow-up Hdwy	3.518	4.018	3.318	3.518	4.018	3.327	2.218	-	-	2.218	-	-
Pot Cap-1 Maneuver	~ 15	42	851	30	42	893	1376	-	-	1422	-	-
Stage 1	69	95	-	849	771	-	-	-	-	-	-	-
Stage 2	499	766	-	69	94	-	-	-	-	-	-	-
Platoon blocked, %								-	-		-	-
Mov Cap-1 Maneuver	0	11	851	~ 10	11	893	1376	-	-	1422	-	-
Mov Cap-2 Maneuver	0	11	-	~ 10	11	-	-	-	-	-	-	-
Stage 1	69	24	-	848	770	-	-	-	-	-	-	-
Stage 2	~ 21	765	-	~ 16	24	-	-	-	-	-	-	-

Approach	EB	WB	NB	SB
HCM Control Delay, s	$ 707.4	$ 1232.2	0.1	10.3
HCM LOS	F	F		

Minor Lane/Major Mvmt	NBL	NBT	NBR	EBLn1	WBLn1	SBL	SBT	SBR
Capacity (veh/h)	1376	-	-	22	242	1422	-	-
HCM Lane V/C Ratio	0.001	-	-	1.685	3.649	0.665	-	-
HCM Control Delay (s)	7.6	0	-	$ 707.4	$ 1232.2	12.4	0	-
HCM Lane LOS	A	A	-	F	F	B	A	-
HCM 95th %tile Q(veh)	0	-	-	4.8	84.1	5.5	-	-

Notes

~: Volume exceeds capacity $: Delay exceeds 300s +: Computation Not Defined *: All major volume in platoon

Intersection	
Int Delay, s/veh	49.3

Movement	EBL	EBT	EBR	WBL	WBT	WBR	NBL	NBT	NBR	SBL	SBT	SBR
Lane Configurations												
Traffic Vol, veh/h	11	3	8	10	5	31	3	327	3	59	577	21
Future Vol, veh/h	11	3	8	10	5	31	3	327	3	59	577	21
Conflicting Peds, #/hr	0	0	0	0	0	0	0	0	0	0	0	0
Sign Control	Free	Free	Free	Free	Free	Free	Stop	Stop	Stop	Stop	Stop	Stop
RT Channelized	-	-	None	-	-	None	-	-	None	-	-	None
Storage Length	-	-	-	-	-	-	-	-	-	-	-	-
Veh in Median Storage, #	-	0	-	-	0	-	-	0	-	-	0	-
Grade, %	-	0	-	-	0	-	-	0	-	-	0	-
Peak Hour Factor	85	85	85	85	85	85	85	85	85	85	85	85
Heavy Vehicles, %	2	2	2	14	2	2	2	2	2	2	2	2
Mvmt Flow	13	4	9	12	6	36	4	385	4	69	679	25

Major/Minor	Major1			Major2			Minor1			Minor2		
Conflicting Flow All	42	0	0	13	0	0	435	101	9	277	87	24
Stage 1	-	-	-	-	-	-	35	35	-	48	48	-
Stage 2	-	-	-	-	-	-	400	66	-	229	39	-
Critical Hdwy	4.12	-	-	4.24	-	-	7.12	6.52	6.22	7.12	6.52	6.22
Critical Hdwy Stg 1	-	-	-	-	-	-	6.12	5.52	-	6.12	5.52	-
Critical Hdwy Stg 2	-	-	-	-	-	-	6.12	5.52	-	6.12	5.52	-
Follow-up Hdwy	2.218	-	-	2.326	-	-	3.518	4.018	3.318	3.518	4.018	3.318
Pot Cap-1 Maneuver	1567	-	-	1531	-	-	531	789	1073	675	803	1052
Stage 1	-	-	-	-	-	-	981	866	-	965	855	-
Stage 2	-	-	-	-	-	-	626	840	-	774	862	-
Platoon blocked, %		-	-		-	-						
Mov Cap-1 Maneuver	1567	-	-	1531	-	-	140	776	1073	406	790	1052
Mov Cap-2 Maneuver	-	-	-	-	-	-	140	776	-	406	790	-
Stage 1	-	-	-	-	-	-	973	859	-	957	848	-
Stage 2	-	-	-	-	-	-	121	833	-	423	855	-

Approach	EB	WB	NB	SB
HCM Control Delay, s	3.7	1.6	15	71.5
HCM LOS			C	F

Minor Lane/Major Mvmt	NBLn1	EBL	EBT	EBR	WBL	WBT	WBR	SBLn1
Capacity (veh/h)	747	1567	-	-	1531	-	-	734
HCM Lane V/C Ratio	0.524	0.008	-	-	0.008	-	-	1.053
HCM Control Delay (s)	15	7.3	0	-	7.4	0	-	71.5
HCM Lane LOS	C	A	A	-	A	A	-	F
HCM 95th %tile Q(veh)	3.1	0	-	-	0	-	-	19.6

Intersection	
Int Delay, s/veh	3.5

Movement	EBL	EBT	EBR	WBL	WBT	WBR	NBL	NBT	NBR	SBL	SBT	SBR
Lane Configurations												
Traffic Vol, veh/h	1	10	0	14	24	43	0	2	3	25	5	1
Future Vol, veh/h	1	10	0	14	24	43	0	2	3	25	5	1
Conflicting Peds, #/hr	0	0	0	0	0	0	0	0	0	0	0	0
Sign Control	Free	Free	Free	Free	Free	Free	Stop	Stop	Stop	Stop	Stop	Stop
RT Channelized	-	-	None	-	-	None	-	-	None	-	-	None
Storage Length	-	-	-	-	-	-	-	-	-	-	-	-
Veh in Median Storage, #	-	0	-	-	0	-	-	0	-	-	0	-
Grade, %	-	0	-	-	0	-	-	0	-	-	0	-
Peak Hour Factor	86	86	86	86	86	86	86	86	86	86	86	86
Heavy Vehicles, %	2	11	2	2	5	2	2	2	2	2	2	2
Mvmt Flow	1	12	0	16	28	50	0	2	3	29	6	1

Major/Minor	Major1			Major2			Minor1			Minor2		
Conflicting Flow All	78	0	0	12	0	0	103	124	12	102	99	53
Stage 1	-	-	-	-	-	-	14	14	-	85	85	-
Stage 2	-	-	-	-	-	-	89	110	-	17	14	-
Critical Hdwy	4.12	-	-	4.12	-	-	7.12	6.52	6.22	7.12	6.52	6.22
Critical Hdwy Stg 1	-	-	-	-	-	-	6.12	5.52	-	6.12	5.52	-
Critical Hdwy Stg 2	-	-	-	-	-	-	6.12	5.52	-	6.12	5.52	-
Follow-up Hdwy	2.218	-	-	2.218	-	-	3.518	4.018	3.318	3.518	4.018	3.318
Pot Cap-1 Maneuver	1520	-	-	1607	-	-	877	766	1069	879	791	1014
Stage 1	-	-	-	-	-	-	1006	884	-	923	824	-
Stage 2	-	-	-	-	-	-	918	804	-	1002	884	-
Platoon blocked, %		-	-		-	-						
Mov Cap-1 Maneuver	1520	-	-	1607	-	-	864	758	1069	867	782	1014
Mov Cap-2 Maneuver	-	-	-	-	-	-	864	758	-	867	782	-
Stage 1	-	-	-	-	-	-	1005	883	-	922	816	-
Stage 2	-	-	-	-	-	-	901	796	-	995	883	-

Approach	EB	WB	NB	SB
HCM Control Delay, s	0.7	1.3	8.9	9.4
HCM LOS			A	A

Minor Lane/Major Mvmt	NBLn1	EBL	EBT	EBR	WBL	WBT	WBR	SBLn1
Capacity (veh/h)	918	1520	-	-	1607	-	-	856
HCM Lane V/C Ratio	0.006	0.001	-	-	0.01	-	-	0.042
HCM Control Delay (s)	8.9	7.4	0	-	7.3	0	-	9.4
HCM Lane LOS	A	A	A	-	A	A	-	A
HCM 95th %tile Q(veh)	0	0	-	-	0	-	-	0.1

Intersection	
Int Delay, s/veh	1.2

Movement	EBL	EBT	EBR	WBL	WBT	WBR	NBL	NBT	NBR	SBL	SBT	SBR
Lane Configurations												
Traffic Vol, veh/h	15	2	23	3	0	5	35	1123	1	7	525	38
Future Vol, veh/h	15	2	23	3	0	5	35	1123	1	7	525	38
Conflicting Peds, #/hr	0	0	0	0	0	0	0	0	0	0	0	0
Sign Control	Stop	Stop	Stop	Stop	Stop	Stop	Free	Free	Free	Free	Free	Free
RT Channelized	-	-	Stop	-	-	Stop	-	-	None	-	-	None
Storage Length	-	-	-	-	-	-	610	-	600	565	-	550
Veh in Median Storage, #	-	0	-	-	0	-	-	0	-	-	0	-
Grade, %	-	0	-	-	0	-	-	0	-	-	0	-
Peak Hour Factor	79	79	79	79	79	79	79	79	79	79	79	79
Heavy Vehicles, %	2	2	2	2	2	2	14	6	2	17	19	6
Mvmt Flow	19	3	29	4	0	6	44	1422	1	9	665	48

Major/Minor	Minor2			Minor1			Major1			Major2		
Conflicting Flow All	1482	2194	333	1862	2241	711	713	0	0	1423	0	0
Stage 1	683	683	-	1510	1510	-	-	-	-	-	-	-
Stage 2	799	1511	-	352	731	-	-	-	-	-	-	-
Critical Hdwy	7.54	6.54	6.94	7.54	6.54	6.94	4.38	-	-	4.44	-	-
Critical Hdwy Stg 1	6.54	5.54	-	6.54	5.54	-	-	-	-	-	-	-
Critical Hdwy Stg 2	6.54	5.54	-	6.54	5.54	-	-	-	-	-	-	-
Follow-up Hdwy	3.52	4.02	3.32	3.52	4.02	3.32	2.34	-	-	2.37	-	-
Pot Cap-1 Maneuver	87	45	663	45	42	375	807	-	-	405	-	-
Stage 1	405	447	-	126	181	-	-	-	-	-	-	-
Stage 2	345	181	-	638	425	-	-	-	-	-	-	-
Platoon blocked, %								-	-		-	-
Mov Cap-1 Maneuver	81	42	663	39	39	375	807	-	-	405	-	-
Mov Cap-2 Maneuver	81	42	-	39	39	-	-	-	-	-	-	-
Stage 1	383	437	-	119	171	-	-	-	-	-	-	-
Stage 2	321	171	-	593	416	-	-	-	-	-	-	-

Approach	EB	WB	NB	SB
HCM Control Delay, s	34.4	43.3	0.3	0.2
HCM LOS	D	E		

Minor Lane/Major Mvmt	NBL	NBT	NBR	EBLn1	WBLn1	SBL	SBT	SBR
Capacity (veh/h)	807	-	-	172	104	405	-	-
HCM Lane V/C Ratio	0.055	-	-	0.294	0.097	0.022	-	-
HCM Control Delay (s)	9.7	-	-	34.4	43.3	14.1	-	-
HCM Lane LOS	A	-	-	D	E	B	-	-
HCM 95th %tile Q(veh)	0.2	-	-	1.2	0.3	0.1	-	-

Intersection	
Int Delay, s/veh	3.9

Movement	EBL	EBR	NBL	NBT	SBT	SBR
Lane Configurations						
Traffic Vol, veh/h	127	4	8	51	66	217
Future Vol, veh/h	127	4	8	51	66	217
Conflicting Peds, #/hr	0	0	0	0	0	0
Sign Control	Stop	Stop	Free	Free	Free	Free
RT Channelized	-	None	-	None	-	None
Storage Length	0	-	-	-	-	-
Veh in Median Storage, #	0	-	-	0	0	-
Grade, %	0	-	-	0	0	-
Peak Hour Factor	64	64	64	64	64	64
Heavy Vehicles, %	2	2	2	2	2	2
Mvmt Flow	198	6	13	80	103	339

Major/Minor	Minor2		Major1		Major2	
Conflicting Flow All	379	273	442	0	-	0
Stage 1	273	-	-	-	-	-
Stage 2	106	-	-	-	-	-
Critical Hdwy	6.42	6.22	4.12	-	-	-
Critical Hdwy Stg 1	5.42	-	-	-	-	-
Critical Hdwy Stg 2	5.42	-	-	-	-	-
Follow-up Hdwy	3.518	3.318	2.218	-	-	-
Pot Cap-1 Maneuver	623	766	1118	-	-	-
Stage 1	773	-	-	-	-	-
Stage 2	918	-	-	-	-	-
Platoon blocked, %				-	-	-
Mov Cap-1 Maneuver	616	766	1118	-	-	-
Mov Cap-2 Maneuver	616	-	-	-	-	-
Stage 1	764	-	-	-	-	-
Stage 2	918	-	-	-	-	-

Approach	EB	NB	SB
HCM Control Delay, s	13.6	1.1	0
HCM LOS	B		

Minor Lane/Major Mvmt	NBL	NBT	EBLn1	SBT	SBR
Capacity (veh/h)	1118	-	620	-	-
HCM Lane V/C Ratio	0.011	-	0.33	-	-
HCM Control Delay (s)	8.3	0	13.6	-	-
HCM Lane LOS	A	A	B	-	-
HCM 95th %tile Q(veh)	0	-	1.4	-	-

Intersection	
Int Delay, s/veh	2.4

Movement	EBL	EBR	NBL	NBT	SBT	SBR
Lane Configurations						
Traffic Vol, veh/h	27	4	6	32	25	45
Future Vol, veh/h	27	4	6	32	25	45
Conflicting Peds, #/hr	0	0	0	0	0	0
Sign Control	Stop	Stop	Free	Free	Free	Free
RT Channelized	-	None	-	None	-	None
Storage Length	0	-	-	-	-	-
Veh in Median Storage, #	0	-	-	0	0	-
Grade, %	0	-	-	0	0	-
Peak Hour Factor	64	64	64	64	64	64
Heavy Vehicles, %	2	2	2	2	2	2
Mvmt Flow	42	6	9	50	39	70

Major/Minor	Minor2		Major1		Major2	
Conflicting Flow All	142	74	109	0	-	0
Stage 1	74	-	-	-	-	-
Stage 2	68	-	-	-	-	-
Critical Hdwy	6.42	6.22	4.12	-	-	-
Critical Hdwy Stg 1	5.42	-	-	-	-	-
Critical Hdwy Stg 2	5.42	-	-	-	-	-
Follow-up Hdwy	3.518	3.318	2.218	-	-	-
Pot Cap-1 Maneuver	851	988	1481	-	-	-
Stage 1	949	-	-	-	-	-
Stage 2	955	-	-	-	-	-
Platoon blocked, %				-	-	-
Mov Cap-1 Maneuver	846	988	1481	-	-	-
Mov Cap-2 Maneuver	846	-	-	-	-	-
Stage 1	943	-	-	-	-	-
Stage 2	955	-	-	-	-	-

Approach	EB	NB	SB
HCM Control Delay, s	9.4	1.2	0
HCM LOS	A		

Minor Lane/Major Mvmt	NBL	NBT	EBLn1	SBT	SBR
Capacity (veh/h)	1481	-	862	-	-
HCM Lane V/C Ratio	0.006	-	0.056	-	-
HCM Control Delay (s)	7.4	0	9.4	-	-
HCM Lane LOS	A	A	A	-	-
HCM 95th %tile Q(veh)	0	-	0.2	-	-

MOVEMENT SUMMARY

Site: 1 [1. SR 124 / US Highway 12 Westbound Ramp (2033 AM Without Project) (Site Folder: 2033-AM-Without Project)]

SR 124 / US Highway 12 Westbound Ramp
Site Category: (None)
Roundabout

Vehicle Movement Performance

Mov ID	Turn	INPUT VOLUMES [Total veh/h	HV] %	DEMAND FLOWS [Total veh/h	HV] %	Deg. Satn v/c	Aver. Delay sec	Level of Service	95% BACK OF QUEUE [Veh. veh	Dist] ft	Prop. Que	Effective Stop Rate	Aver. No. Cycles	Aver. Speed mph
South: SR 124														
3u	U	1	2.0	1	2.0	0.428	11.0	LOS B	0.0	0.0	0.00	0.63	0.00	35.3
3	L2	402	9.0	484	9.0	0.428	9.1	LOS A	0.0	0.0	0.00	0.63	0.00	34.6
8	T1	222	8.0	267	8.0	0.428	4.9	LOS A	0.0	0.0	0.00	0.63	0.00	34.9
Approach		625	8.6	753	8.6	0.428	7.6	LOS A	0.0	0.0	0.00	0.63	0.00	34.7
East: US Highway 12 Westbound Ramp														
1	L2	187	9.0	225	9.0	0.394	16.0	LOS B	2.3	62.5	0.76	0.95	0.84	28.2
16	R2	7	17.0	8	17.0	0.394	12.5	LOS B	2.3	62.5	0.76	0.95	0.84	27.6
Approach		194	9.3	234	9.3	0.394	15.8	LOS B	2.3	62.5	0.76	0.95	0.84	28.1
North: SR 124														
4	T1	123	6.0	148	6.0	0.194	9.2	LOS A	1.1	29.4	0.71	0.76	0.71	34.1
14	R2	169	5.0	204	5.0	0.210	7.1	LOS A	1.1	27.6	0.55	0.69	0.55	34.4
Approach		292	5.4	352	5.4	0.210	8.0	LOS A	1.1	29.4	0.62	0.72	0.62	34.2
All Vehicles		1111	7.9	1339	7.9	0.428	9.2	LOS A	2.3	62.5	0.29	0.71	0.31	33.2

Site Level of Service (LOS) Method: Delay & Degree of Saturation (SIDRA). Site LOS Method is specified in the Parameter Settings dialog (Site tab).
Roundabout LOS Method: Same as Signalised Intersections.
Vehicle movement LOS values are based on average delay and v/c ratio (degree of saturation) per movement.
Intersection and Approach LOS values are based on average delay for all movements (v/c not used).
Roundabout Capacity Model: SIDRA Standard.
Delay Model: SIDRA Standard (Geometric Delay is included).
Queue Model: HCM Queue Formula.
Gap-Acceptance Capacity: SIDRA Standard (Akçelik M3D).
HV (%) values are calculated for All Movement Classes of All Heavy Vehicle Model Designation.

MOVEMENT SUMMARY

Site: 1 [2. SR 124 and 5th Avenue / Gateway Road and US Highway 12 Eastbound Ramp (2033 AM Without Project) (Site Folder: 2033-AM-Without Project)]

SR 124 and 5th Avenue / Gateway Road and US Highway 12 Eastbound Ramp
Site Category: (None)
Roundabout

Vehicle Movement Performance

Mov ID	Turn	INPUT VOLUMES [Total veh/h	HV] %	DEMAND FLOWS [Total veh/h	HV] %	Deg. Satn v/c	Aver. Delay sec	Level of Service	95% BACK OF QUEUE [Veh. veh	Dist] ft	Prop. Que	Effective Stop Rate	Aver. No. Cycles	Aver. Speed mph
South: 5th Avenue														
3	L2	12	2.0	14	2.0	0.516	6.8	LOS A	3.8	99.6	0.53	0.45	0.53	24.7
8	T1	355	3.0	418	3.0	0.516	2.8	LOS A	3.8	99.6	0.53	0.45	0.53	24.5
18	R2	58	33.0	68	33.0	0.516	5.2	LOS A	3.8	99.6	0.53	0.45	0.53	24.8
Approach		425	7.1	500	7.1	0.516	3.3	LOS A	3.8	99.6	0.53	0.45	0.53	24.6
East: US Highway 12 Westbound Ramp														
1	L2	619	2.0	728	2.0	0.942	25.3	LOS D	21.1	534.8	1.00	1.45	2.05	25.5
6	T1	172	2.0	202	2.0	0.942	21.0	LOS D	21.1	534.8	1.00	1.45	2.05	25.6
16	R2	179	10.0	211	10.0	0.138	3.6	LOS A	0.0	0.0	0.00	0.48	0.00	32.6
Approach		970	3.5	1141	3.5	0.942	20.5	LOS C	21.1	534.8	0.82	1.27	1.67	26.6
North: SR 124														
7	L2	9	2.0	11	2.0	0.995	58.2	LOS E	16.9	468.2	1.00	1.59	2.64	20.0
4	T1	253	7.0	298	7.0	0.995	54.4	LOS E	16.9	468.2	1.00	1.59	2.64	20.0
14	R2	47	50.0	55	50.0	0.995	59.1	LOS E	16.9	468.2	1.00	1.59	2.64	19.3
Approach		309	13.4	364	13.4	0.995	55.2	LOS E	16.9	468.2	1.00	1.59	2.64	19.9
West: Gateway Road														
5	L2	91	20.0	107	20.0	0.503	22.9	LOS C	3.3	100.7	0.92	1.10	1.19	20.3
2	T1	13	100.0	15	100.0	0.503	32.2	LOS C	3.3	100.7	0.92	1.10	1.19	20.2
12	R2	8	17.0	9	17.0	0.503	19.0	LOS B	3.3	100.7	0.92	1.10	1.19	19.9
Approach		112	29.1	132	29.1	0.503	23.7	LOS C	3.3	100.7	0.92	1.10	1.19	20.2
All Vehicles		1816	7.6	2136	7.6	0.995	22.6	LOS C	21.1	534.8	0.79	1.12	1.54	24.3

Site Level of Service (LOS) Method: Delay & Degree of Saturation (SIDRA). Site LOS Method is specified in the Parameter Settings dialog (Site tab).
Roundabout LOS Method: Same as Signalised Intersections.
Vehicle movement LOS values are based on average delay and v/c ratio (degree of saturation) per movement.
Intersection and Approach LOS values are based on average delay for all movements (v/c not used).
Roundabout Capacity Model: SIDRA Standard.
Delay Model: SIDRA Standard (Geometric Delay is included).
Queue Model: HCM Queue Formula.
Gap-Acceptance Capacity: SIDRA Standard (Akçelik M3D).
HV (%) values are calculated for All Movement Classes of All Heavy Vehicle Model Designation.

Intersection	
Int Delay, s/veh	36.1

Movement	EBL	EBT	EBR	WBL	WBT	WBR	NBL	NBT	NBR	SBL	SBT	SBR
Lane Configurations												
Traffic Vol, veh/h	8	1	1	7	3	262	4	169	16	580	260	41
Future Vol, veh/h	8	1	1	7	3	262	4	169	16	580	260	41
Conflicting Peds, #/hr	0	0	0	0	0	0	0	0	0	0	0	0
Sign Control	Stop	Stop	Stop	Stop	Stop	Stop	Free	Free	Free	Free	Free	Free
RT Channelized	-	-	None	-	-	None	-	-	None	-	-	None
Storage Length	-	-	-	-	-	-	-	-	-	-	-	-
Veh in Median Storage, #	-	0	-	-	0	-	-	0	-	-	0	-
Grade, %	-	0	-	-	0	-	-	0	-	-	0	-
Peak Hour Factor	81	81	81	81	81	81	81	81	81	81	81	81
Heavy Vehicles, %	2	2	2	2	2	8	2	2	2	6	2	2
Mvmt Flow	10	1	1	9	4	323	5	209	20	716	321	51

Major/Minor	Minor2			Minor1			Major1			Major2		
Conflicting Flow All	2172	2018	347	2009	2033	219	372	0	0	229	0	0
Stage 1	1779	1779	-	229	229	-	-	-	-	-	-	-
Stage 2	393	239	-	1780	1804	-	-	-	-	-	-	-
Critical Hdwy	7.12	6.52	6.22	7.12	6.52	6.28	4.12	-	-	4.16	-	-
Critical Hdwy Stg 1	6.12	5.52	-	6.12	5.52	-	-	-	-	-	-	-
Critical Hdwy Stg 2	6.12	5.52	-	6.12	5.52	-	-	-	-	-	-	-
Follow-up Hdwy	3.518	4.018	3.318	3.518	4.018	3.372	2.218	-	-	2.254	-	-
Pot Cap-1 Maneuver	34	58	696	44	57	806	1186	-	-	1316	-	-
Stage 1	105	135	-	774	715	-	-	-	-	-	-	-
Stage 2	632	708	-	105	131	-	-	-	-	-	-	-
Platoon blocked, %								-	-		-	-
Mov Cap-1 Maneuver	~ 8	18	696	18	17	806	1186	-	-	1316	-	-
Mov Cap-2 Maneuver	~ 8	18	-	18	17	-	-	-	-	-	-	-
Stage 1	104	42	-	770	711	-	-	-	-	-	-	-
Stage 2	375	704	-	31	40	-	-	-	-	-	-	-

Approach	EB	WB	NB	SB
HCM Control Delay, s	$ 992.5	119.3	0.2	7.2
HCM LOS	F	F		

Minor Lane/Major Mvmt	NBL	NBT	NBR	EBLn1	WBLn1	SBL	SBT	SBR
Capacity (veh/h)	1186	-	-	9	305	1316	-	-
HCM Lane V/C Ratio	0.004	-	-	1.372	1.101	0.544	-	-
HCM Control Delay (s)	8	0	-	$ 992.5	119.3	10.9	0	-
HCM Lane LOS	A	A	-	F	F	B	A	-
HCM 95th %tile Q(veh)	0	-	-	2.4	13.3	3.4	-	-

Notes

~: Volume exceeds capacity $: Delay exceeds 300s +: Computation Not Defined *: All major volume in platoon

Intersection	
Int Delay, s/veh	8.2

Movement	EBL	EBT	EBR	WBL	WBT	WBR	NBL	NBT	NBR	SBL	SBT	SBR
Lane Configurations												
Traffic Vol, veh/h	49	2	2	7	4	84	3	100	2	27	35	13
Future Vol, veh/h	49	2	2	7	4	84	3	100	2	27	35	13
Conflicting Peds, #/hr	0	0	0	0	0	0	0	0	0	0	0	0
Sign Control	Free	Free	Free	Free	Free	Free	Stop	Stop	Stop	Stop	Stop	Stop
RT Channelized	-	-	None	-	-	None	-	-	None	-	-	None
Storage Length	-	-	-	-	-	-	-	-	-	-	-	-
Veh in Median Storage, #	-	0	-	-	0	-	-	0	-	-	0	-
Grade, %	-	0	-	-	0	-	-	0	-	-	0	-
Peak Hour Factor	72	72	72	72	72	72	72	72	72	72	72	72
Heavy Vehicles, %	6	2	2	2	2	5	100	7	2	2	2	2
Mvmt Flow	68	3	3	10	6	117	4	139	3	38	49	18

Major/Minor	Major1			Major2			Minor1			Minor2		
Conflicting Flow All	123	0	0	6	0	0	259	284	5	297	227	65
Stage 1	-	-	-	-	-	-	141	141	-	85	85	-
Stage 2	-	-	-	-	-	-	118	143	-	212	142	-
Critical Hdwy	4.16	-	-	4.12	-	-	8.1	6.57	6.22	7.12	6.52	6.22
Critical Hdwy Stg 1	-	-	-	-	-	-	7.1	5.57	-	6.12	5.52	-
Critical Hdwy Stg 2	-	-	-	-	-	-	7.1	5.57	-	6.12	5.52	-
Follow-up Hdwy	2.254	-	-	2.218	-	-	4.4	4.063	3.318	3.518	4.018	3.318
Pot Cap-1 Maneuver	1440	-	-	1615	-	-	533	617	1078	655	672	999
Stage 1	-	-	-	-	-	-	674	771	-	923	824	-
Stage 2	-	-	-	-	-	-	696	769	-	790	779	-
Platoon blocked, %		-	-		-	-						
Mov Cap-1 Maneuver	1440	-	-	1615	-	-	473	584	1078	513	636	999
Mov Cap-2 Maneuver	-	-	-	-	-	-	473	584	-	513	636	-
Stage 1	-	-	-	-	-	-	642	735	-	880	818	-
Stage 2	-	-	-	-	-	-	638	764	-	609	742	-

Approach	EB	WB	NB	SB
HCM Control Delay, s	7	0.5	13.2	12
HCM LOS			B	B

Minor Lane/Major Mvmt	NBLn1	EBL	EBT	EBR	WBL	WBT	WBR	SBLn1
Capacity (veh/h)	585	1440	-	-	1615	-	-	621
HCM Lane V/C Ratio	0.249	0.047	-	-	0.006	-	-	0.168
HCM Control Delay (s)	13.2	7.6	0	-	7.2	0	-	12
HCM Lane LOS	B	A	A	-	A	A	-	B
HCM 95th %tile Q(veh)	1	0.1	-	-	0	-	-	0.6

Intersection	
Int Delay, s/veh	4.8

Movement	EBL	EBT	EBR	WBL	WBT	WBR	NBL	NBT	NBR	SBL	SBT	SBR
Lane Configurations												
Traffic Vol, veh/h	5	14	0	1	4	6	0	2	8	10	3	1
Future Vol, veh/h	5	14	0	1	4	6	0	2	8	10	3	1
Conflicting Peds, #/hr	0	0	0	0	0	0	1	0	0	0	0	1
Sign Control	Free	Free	Free	Free	Free	Free	Stop	Stop	Stop	Stop	Stop	Stop
RT Channelized	-	-	None	-	-	None	-	-	None	-	-	None
Storage Length	-	-	-	-	-	-	-	-	-	-	-	-
Veh in Median Storage, #	-	0	-	-	0	-	-	0	-	-	0	-
Grade, %	-	0	-	-	0	-	-	0	-	-	0	-
Peak Hour Factor	77	77	77	77	77	77	77	77	77	77	77	77
Heavy Vehicles, %	2	2	2	100	33	20	2	50	2	2	2	2
Mvmt Flow	6	18	0	1	5	8	0	3	10	13	4	1

Major/Minor	Major1			Major2			Minor1			Minor2		
Conflicting Flow All	13	0	0	18	0	0	45	45	18	48	41	10
Stage 1	-	-	-	-	-	-	30	30	-	11	11	-
Stage 2	-	-	-	-	-	-	15	15	-	37	30	-
Critical Hdwy	4.12	-	-	5.1	-	-	7.12	7	6.22	7.12	6.52	6.22
Critical Hdwy Stg 1	-	-	-	-	-	-	6.12	6	-	6.12	5.52	-
Critical Hdwy Stg 2	-	-	-	-	-	-	6.12	6	-	6.12	5.52	-
Follow-up Hdwy	2.218	-	-	3.1	-	-	3.518	4.45	3.318	3.518	4.018	3.318
Pot Cap-1 Maneuver	1606	-	-	1141	-	-	957	762	1061	953	851	1071
Stage 1	-	-	-	-	-	-	987	784	-	1010	886	-
Stage 2	-	-	-	-	-	-	1005	796	-	978	870	-
Platoon blocked, %		-	-		-	-						
Mov Cap-1 Maneuver	1606	-	-	1141	-	-	948	758	1061	938	847	1070
Mov Cap-2 Maneuver	-	-	-	-	-	-	948	758	-	938	847	-
Stage 1	-	-	-	-	-	-	983	781	-	1006	885	-
Stage 2	-	-	-	-	-	-	997	795	-	961	867	-

Approach	EB	WB	NB	SB
HCM Control Delay, s	1.9	0.7	8.7	9
HCM LOS			A	A

Minor Lane/Major Mvmt	NBLn1	EBL	EBT	EBR	WBL	WBT	WBR	SBLn1
Capacity (veh/h)	982	1606	-	-	1141	-	-	925
HCM Lane V/C Ratio	0.013	0.004	-	-	0.001	-	-	0.02
HCM Control Delay (s)	8.7	7.3	0	-	8.2	0	-	9
HCM Lane LOS	A	A	A	-	A	A	-	A
HCM 95th %tile Q(veh)	0	0	-	-	0	-	-	0.1

Intersection	
Int Delay, s/veh	0.6

Movement	EBL	EBT	EBR	WBL	WBT	WBR	NBL	NBT	NBR	SBL	SBT	SBR
Lane Configurations												
Traffic Vol, veh/h	19	0	7	1	0	5	7	532	0	6	466	5
Future Vol, veh/h	19	0	7	1	0	5	7	532	0	6	466	5
Conflicting Peds, #/hr	0	0	0	0	0	0	0	0	0	0	0	0
Sign Control	Stop	Stop	Stop	Stop	Stop	Stop	Free	Free	Free	Free	Free	Free
RT Channelized	-	-	Stop	-	-	Stop	-	-	None	-	-	None
Storage Length	-	-	-	-	-	-	610	-	600	565	-	550
Veh in Median Storage, #	-	0	-	-	0	-	-	0	-	-	0	-
Grade, %	-	0	-	-	0	-	-	0	-	-	0	-
Peak Hour Factor	90	90	90	90	90	90	90	90	90	90	90	90
Heavy Vehicles, %	7	2	2	2	2	2	33	13	2	2	15	25
Mvmt Flow	21	0	8	1	0	6	8	591	0	7	518	6

Major/Minor	Minor2			Minor1			Major1			Major2		
Conflicting Flow All	844	1139	259	880	1145	296	524	0	0	591	0	0
Stage 1	532	532	-	607	607	-	-	-	-	-	-	-
Stage 2	312	607	-	273	538	-	-	-	-	-	-	-
Critical Hdwy	7.64	6.54	6.94	7.54	6.54	6.94	4.76	-	-	4.14	-	-
Critical Hdwy Stg 1	6.64	5.54	-	6.54	5.54	-	-	-	-	-	-	-
Critical Hdwy Stg 2	6.64	5.54	-	6.54	5.54	-	-	-	-	-	-	-
Follow-up Hdwy	3.57	4.02	3.32	3.52	4.02	3.32	2.53	-	-	2.22	-	-
Pot Cap-1 Maneuver	248	200	740	241	198	700	851	-	-	981	-	-
Stage 1	486	524	-	450	485	-	-	-	-	-	-	-
Stage 2	659	485	-	710	521	-	-	-	-	-	-	-
Platoon blocked, %								-	-		-	-
Mov Cap-1 Maneuver	243	197	740	235	195	700	851	-	-	981	-	-
Mov Cap-2 Maneuver	243	197	-	235	195	-	-	-	-	-	-	-
Stage 1	482	520	-	446	481	-	-	-	-	-	-	-
Stage 2	648	481	-	698	517	-	-	-	-	-	-	-

Approach	EB	WB	NB	SB
HCM Control Delay, s	16.8	9.3	0.1	0.1
HCM LOS	C	A		

Minor Lane/Major Mvmt	NBL	NBT	NBR	EBLn1	WBLn1	SBL	SBT	SBR
Capacity (veh/h)	851	-	-	333	840	981	-	-
HCM Lane V/C Ratio	0.009	-	-	0.087	0.008	0.007	-	-
HCM Control Delay (s)	9.3	-	-	16.8	9.3	8.7	-	-
HCM Lane LOS	A	-	-	C	A	A	-	-
HCM 95th %tile Q(veh)	0	-	-	0.3	0	0	-	-

MOVEMENT SUMMARY

Site: 1 [1. SR 124 / US Highway 12 Westbound Ramp (2033 PM Without Project) (Site Folder: 2033-PM-Without Project)]

SR 124 / US Highway 12 Westbound Ramp
Site Category: (None)
Roundabout

Vehicle Movement Performance

Mov ID	Turn	INPUT VOLUMES [Total veh/h	HV] %	DEMAND FLOWS [Total veh/h	HV] %	Deg. Satn v/c	Aver. Delay sec	Level of Service	95% BACK OF QUEUE [Veh. veh	Dist] ft	Prop. Que	Effective Stop Rate	Aver. No. Cycles	Aver. Speed mph
South: SR 124														
3u	U	4	2.0	5	2.0	0.721	11.3	LOS B	0.0	0.0	0.00	0.64	0.00	34.9
3	L2	784	6.0	912	6.0	0.721	9.4	LOS A	0.0	0.0	0.00	0.64	0.00	34.3
8	T1	333	4.0	387	4.0	0.721	5.1	LOS A	0.0	0.0	0.00	0.64	0.00	34.5
Approach		1121	5.4	1303	5.4	0.721	8.1	LOS A	0.0	0.0	0.00	0.64	0.00	34.4
East: US Highway 12 Westbound Ramp														
1	L2	151	11.0	176	11.0	0.642	55.8	LOS E	6.1	165.2	0.99	1.33	1.88	18.9
16	R2	6	2.0	7	2.0	0.642	49.4	LOS D	6.1	165.2	0.99	1.33	1.88	18.7
Approach		157	10.7	183	10.7	0.642	55.6	LOS E	6.1	165.2	0.99	1.33	1.88	18.9
North: SR 124														
4	T1	63	11.0	73	11.0	0.150	15.6	LOS B	0.9	25.6	0.86	0.87	0.86	31.0
14	R2	602	3.0	700	3.0	0.972	50.4	LOS E	27.2	696.3	1.00	1.91	3.42	20.5
Approach		665	3.8	773	3.8	0.972	47.1	LOS D	27.2	696.3	0.99	1.81	3.18	21.2
All Vehicles		1943	5.3	2259	5.3	0.972	25.3	LOS C	27.2	696.3	0.42	1.09	1.24	26.9

Site Level of Service (LOS) Method: Delay & Degree of Saturation (SIDRA). Site LOS Method is specified in the Parameter Settings dialog (Site tab).
Roundabout LOS Method: Same as Signalised Intersections.
Vehicle movement LOS values are based on average delay and v/c ratio (degree of saturation) per movement.
Intersection and Approach LOS values are based on average delay for all movements (v/c not used).
Roundabout Capacity Model: SIDRA Standard.
Delay Model: SIDRA Standard (Geometric Delay is included).
Queue Model: HCM Queue Formula.
Gap-Acceptance Capacity: SIDRA Standard (Akçelik M3D).
HV (%) values are calculated for All Movement Classes of All Heavy Vehicle Model Designation.

MOVEMENT SUMMARY

Site: 1 [2. SR 124 and 5th Avenue / Gateway Road and US Highway 12 Eastbound Ramp (2033 PM Without Project) (Site Folder: 2033-PM-Without Project)]

SR 124 and 5th Avenue / Gateway Road and US Highway 12 Eastbound Ramp
Site Category: (None)
Roundabout

Vehicle Movement Performance

Mov ID	Turn	INPUT VOLUMES [Total veh/h	HV] %	DEMAND FLOWS [Total veh/h	HV] %	Deg. Satn v/c	Aver. Delay sec	Level of Service	95% BACK OF QUEUE [Veh. veh	Dist] ft	Prop. Que	Effective Stop Rate	Aver. No. Cycles	Aver. Speed mph
South: 5th Avenue														
3	L2	4	2.0	4	2.0	1.002	30.0	LOS F	34.6	878.3	1.00	1.52	1.96	19.8
8	T1	678	2.0	721	2.0	1.002	26.0	LOS F	34.6	878.3	1.00	1.52	1.96	19.7
18	R2	219	2.0	233	2.0	1.002	26.5	LOS F	34.6	878.3	1.00	1.52	1.96	19.4
Approach		901	2.0	959	2.0	1.002	26.1	LOS C	34.6	878.3	1.00	1.52	1.96	19.7
East: US Highway 12 Westbound Ramp														
1	L2	501	2.0	533	2.0	1.054	67.3	LOS F	32.0	816.9	1.00	2.10	3.62	17.2
6	T1	94	7.0	100	7.0	1.054	63.4	LOS F	32.0	816.9	1.00	2.10	3.62	17.2
16	R2	252	6.0	268	6.0	0.170	3.5	LOS A	0.0	0.0	0.00	0.48	0.00	32.6
Approach		847	3.7	901	3.7	1.054	47.9	LOS D	32.0	816.9	0.70	1.62	2.54	20.0
North: SR 124														
7	L2	5	25.0	5	25.0	0.368	13.4	LOS B	2.2	56.5	0.74	0.81	0.74	33.4
4	T1	199	4.0	212	4.0	0.368	8.0	LOS A	2.2	56.5	0.74	0.81	0.74	34.3
14	R2	21	17.0	22	17.0	0.368	8.5	LOS A	2.2	56.5	0.74	0.81	0.74	33.2
Approach		225	5.7	239	5.7	0.368	8.1	LOS A	2.2	56.5	0.74	0.81	0.74	34.2
West: Gateway Road														
5	L2	177	4.0	188	4.0	0.428	11.6	LOS B	2.9	73.5	0.83	0.95	0.90	23.0
2	T1	45	2.0	48	2.0	0.428	7.5	LOS A	2.9	73.5	0.83	0.95	0.90	22.8
12	R2	11	2.0	12	2.0	0.428	8.0	LOS A	2.9	73.5	0.83	0.95	0.90	22.4
Approach		233	3.5	248	3.5	0.428	10.6	LOS B	2.9	73.5	0.83	0.95	0.90	22.9
All Vehicles		2206	3.2	2347	3.2	1.054	31.0	LOS C	34.6	878.3	0.84	1.42	1.95	21.0

Site Level of Service (LOS) Method: Delay & Degree of Saturation (SIDRA). Site LOS Method is specified in the Parameter Settings dialog (Site tab).
Roundabout LOS Method: Same as Signalised Intersections.
Vehicle movement LOS values are based on average delay and v/c ratio (degree of saturation) per movement.
Intersection and Approach LOS values are based on average delay for all movements (v/c not used).
Roundabout Capacity Model: SIDRA Standard.
Delay Model: SIDRA Standard (Geometric Delay is included).
Queue Model: HCM Queue Formula.
Gap-Acceptance Capacity: SIDRA Standard (Akçelik M3D).
HV (%) values are calculated for All Movement Classes of All Heavy Vehicle Model Designation.

Intersection	
Int Delay, s/veh	569.7

Movement	EBL	EBT	EBR	WBL	WBT	WBR	NBL	NBT	NBR	SBL	SBT	SBR
Lane Configurations												
Traffic Vol, veh/h	43	3	3	28	1	699	2	156	16	510	189	19
Future Vol, veh/h	43	3	3	28	1	699	2	156	16	510	189	19
Conflicting Peds, #/hr	0	0	0	0	0	0	0	0	0	0	0	0
Sign Control	Stop	Stop	Stop	Stop	Stop	Stop	Free	Free	Free	Free	Free	Free
RT Channelized	-	-	None	-	-	None	-	-	None	-	-	None
Storage Length	-	-	-	-	-	-	-	-	-	-	-	-
Veh in Median Storage, #	-	0	-	-	0	-	-	0	-	-	0	-
Grade, %	-	0	-	-	0	-	-	0	-	-	0	-
Peak Hour Factor	89	89	89	89	89	89	89	89	89	89	89	89
Heavy Vehicles, %	2	2	2	2	2	3	2	2	2	2	3	2
Mvmt Flow	48	3	3	31	1	785	2	175	18	573	212	21

Major/Minor	Minor2			Minor1			Major1			Major2		
Conflicting Flow All	1950	1566	223	1560	1567	184	233	0	0	193	0	0
Stage 1	1369	1369	-	188	188	-	-	-	-	-	-	-
Stage 2	581	197	-	1372	1379	-	-	-	-	-	-	-
Critical Hdwy	7.12	6.52	6.22	7.12	6.52	6.23	4.12	-	-	4.12	-	-
Critical Hdwy Stg 1	6.12	5.52	-	6.12	5.52	-	-	-	-	-	-	-
Critical Hdwy Stg 2	6.12	5.52	-	6.12	5.52	-	-	-	-	-	-	-
Follow-up Hdwy	3.518	4.018	3.318	3.518	4.018	3.327	2.218	-	-	2.218	-	-
Pot Cap-1 Maneuver	~ 48	111	817	91	111	856	1335	-	-	1380	-	-
Stage 1	181	214	-	814	745	-	-	-	-	-	-	-
Stage 2	499	738	-	180	212	-	-	-	-	-	-	-
Platoon blocked, %								-	-		-	-
Mov Cap-1 Maneuver	~ 2	58	817	54	58	856	1335	-	-	1380	-	-
Mov Cap-2 Maneuver	~ 2	58	-	54	58	-	-	-	-	-	-	-
Stage 1	181	112	-	812	744	-	-	-	-	-	-	-
Stage 2	~ 41	737	-	91	111	-	-	-	-	-	-	-

Approach	EB	WB	NB	SB
HCM Control Delay, s	$ 15384.6	264	0.1	6.7
HCM LOS	F	F		

Minor Lane/Major Mvmt	NBL	NBT	NBR	EBLn1	WBLn1	SBL	SBT	SBR
Capacity (veh/h)	1335	-	-	2	538	1380	-	-
HCM Lane V/C Ratio	0.002	-	-	-27.528	1.52	0.415	-	-
HCM Control Delay (s)	7.7	0	-	$ 15384.6	264	9.4	0	-
HCM Lane LOS	A	A	-	F	F	A	A	-
HCM 95th %tile Q(veh)	0	-	-	8.9	42.3	2.1	-	-

Notes

~: Volume exceeds capacity $: Delay exceeds 300s +: Computation Not Defined *: All major volume in platoon

Intersection	
Int Delay, s/veh	8.9

Movement	EBL	EBT	EBR	WBL	WBT	WBR	NBL	NBT	NBR	SBL	SBT	SBR
Lane Configurations												
Traffic Vol, veh/h	14	4	9	12	5	35	3	45	4	67	99	28
Future Vol, veh/h	14	4	9	12	5	35	3	45	4	67	99	28
Conflicting Peds, #/hr	0	0	0	0	0	0	0	0	0	0	0	0
Sign Control	Free	Free	Free	Free	Free	Free	Stop	Stop	Stop	Stop	Stop	Stop
RT Channelized	-	-	None	-	-	None	-	-	None	-	-	None
Storage Length	-	-	-	-	-	-	-	-	-	-	-	-
Veh in Median Storage, #	-	0	-	-	0	-	-	0	-	-	0	-
Grade, %	-	0	-	-	0	-	-	0	-	-	0	-
Peak Hour Factor	85	85	85	85	85	85	85	85	85	85	85	85
Heavy Vehicles, %	2	2	2	14	2	2	2	2	2	2	2	2
Mvmt Flow	16	5	11	14	6	41	4	53	5	79	116	33

Major/Minor	Major1			Major2			Minor1			Minor2		
Conflicting Flow All	47	0	0	16	0	0	172	118	11	127	103	27
Stage 1	-	-	-	-	-	-	43	43	-	55	55	-
Stage 2	-	-	-	-	-	-	129	75	-	72	48	-
Critical Hdwy	4.12	-	-	4.24	-	-	7.12	6.52	6.22	7.12	6.52	6.22
Critical Hdwy Stg 1	-	-	-	-	-	-	6.12	5.52	-	6.12	5.52	-
Critical Hdwy Stg 2	-	-	-	-	-	-	6.12	5.52	-	6.12	5.52	-
Follow-up Hdwy	2.218	-	-	2.326	-	-	3.518	4.018	3.318	3.518	4.018	3.318
Pot Cap-1 Maneuver	1560	-	-	1527	-	-	791	772	1070	846	787	1048
Stage 1	-	-	-	-	-	-	971	859	-	957	849	-
Stage 2	-	-	-	-	-	-	875	833	-	938	855	-
Platoon blocked, %		-	-		-	-						
Mov Cap-1 Maneuver	1560	-	-	1527	-	-	668	757	1070	786	772	1048
Mov Cap-2 Maneuver	-	-	-	-	-	-	668	757	-	786	772	-
Stage 1	-	-	-	-	-	-	961	850	-	947	841	-
Stage 2	-	-	-	-	-	-	724	826	-	867	846	-

Approach	EB	WB	NB	SB
HCM Control Delay, s	3.8	1.7	10.1	11.2
HCM LOS			B	B

Minor Lane/Major Mvmt	NBLn1	EBL	EBT	EBR	WBL	WBT	WBR	SBLn1
Capacity (veh/h)	768	1560	-	-	1527	-	-	808
HCM Lane V/C Ratio	0.08	0.011	-	-	0.009	-	-	0.282
HCM Control Delay (s)	10.1	7.3	0	-	7.4	0	-	11.2
HCM Lane LOS	B	A	A	-	A	A	-	B
HCM 95th %tile Q(veh)	0.3	0	-	-	0	-	-	1.2

Intersection	
Int Delay, s/veh	3.4

Movement	EBL	EBT	EBR	WBL	WBT	WBR	NBL	NBT	NBR	SBL	SBT	SBR
Lane Configurations												
Traffic Vol, veh/h	1	11	0	14	25	19	0	2	3	11	5	1
Future Vol, veh/h	1	11	0	14	25	19	0	2	3	11	5	1
Conflicting Peds, #/hr	0	0	0	0	0	0	0	0	0	0	0	0
Sign Control	Free	Free	Free	Free	Free	Free	Stop	Stop	Stop	Stop	Stop	Stop
RT Channelized	-	-	None	-	-	None	-	-	None	-	-	None
Storage Length	-	-	-	-	-	-	-	-	-	-	-	-
Veh in Median Storage, #	-	0	-	-	0	-	-	0	-	-	0	-
Grade, %	-	0	-	-	0	-	-	0	-	-	0	-
Peak Hour Factor	86	86	86	86	86	86	86	86	86	86	86	86
Heavy Vehicles, %	2	11	2	2	5	2	2	2	2	2	2	2
Mvmt Flow	1	13	0	16	29	22	0	2	3	13	6	1

Major/Minor	Major1			Major2			Minor1			Minor2		
Conflicting Flow All	51	0	0	13	0	0	91	98	13	90	87	40
Stage 1	-	-	-	-	-	-	15	15	-	72	72	-
Stage 2	-	-	-	-	-	-	76	83	-	18	15	-
Critical Hdwy	4.12	-	-	4.12	-	-	7.12	6.52	6.22	7.12	6.52	6.22
Critical Hdwy Stg 1	-	-	-	-	-	-	6.12	5.52	-	6.12	5.52	-
Critical Hdwy Stg 2	-	-	-	-	-	-	6.12	5.52	-	6.12	5.52	-
Follow-up Hdwy	2.218	-	-	2.218	-	-	3.518	4.018	3.318	3.518	4.018	3.318
Pot Cap-1 Maneuver	1555	-	-	1606	-	-	893	792	1067	895	803	1031
Stage 1	-	-	-	-	-	-	1005	883	-	938	835	-
Stage 2	-	-	-	-	-	-	933	826	-	1001	883	-
Platoon blocked, %		-	-		-	-						
Mov Cap-1 Maneuver	1555	-	-	1606	-	-	880	783	1067	882	794	1031
Mov Cap-2 Maneuver	-	-	-	-	-	-	880	783	-	882	794	-
Stage 1	-	-	-	-	-	-	1004	882	-	937	827	-
Stage 2	-	-	-	-	-	-	916	818	-	994	882	-

Approach	EB	WB	NB	SB
HCM Control Delay, s	0.6	1.8	8.9	9.3
HCM LOS			A	A

Minor Lane/Major Mvmt	NBLn1	EBL	EBT	EBR	WBL	WBT	WBR	SBLn1
Capacity (veh/h)	932	1555	-	-	1606	-	-	861
HCM Lane V/C Ratio	0.006	0.001	-	-	0.01	-	-	0.023
HCM Control Delay (s)	8.9	7.3	0	-	7.3	0	-	9.3
HCM Lane LOS	A	A	A	-	A	A	-	A
HCM 95th %tile Q(veh)	0	0	-	-	0	-	-	0.1

Intersection	
Int Delay, s/veh	1.5

Movement	EBL	EBT	EBR	WBL	WBT	WBR	NBL	NBT	NBR	SBL	SBT	SBR
Lane Configurations												
Traffic Vol, veh/h	16	2	9	4	0	5	9	1260	1	7	634	42
Future Vol, veh/h	16	2	9	4	0	5	9	1260	1	7	634	42
Conflicting Peds, #/hr	0	0	0	0	0	0	0	0	0	0	0	0
Sign Control	Stop	Stop	Stop	Stop	Stop	Stop	Free	Free	Free	Free	Free	Free
RT Channelized	-	-	Stop	-	-	Stop	-	-	None	-	-	None
Storage Length	-	-	-	-	-	-	610	-	600	565	-	550
Veh in Median Storage, #	-	0	-	-	0	-	-	0	-	-	0	-
Grade, %	-	0	-	-	0	-	-	0	-	-	0	-
Peak Hour Factor	79	79	79	79	79	79	79	79	79	79	79	79
Heavy Vehicles, %	2	2	2	2	2	2	14	6	2	17	19	6
Mvmt Flow	20	3	11	5	0	6	11	1595	1	9	803	53

Major/Minor	Minor2			Minor1			Major1			Major2		
Conflicting Flow All	1641	2439	402	2038	2491	798	856	0	0	1596	0	0
Stage 1	821	821	-	1617	1617	-	-	-	-	-	-	-
Stage 2	820	1618	-	421	874	-	-	-	-	-	-	-
Critical Hdwy	7.54	6.54	6.94	7.54	6.54	6.94	4.38	-	-	4.44	-	-
Critical Hdwy Stg 1	6.54	5.54	-	6.54	5.54	-	-	-	-	-	-	-
Critical Hdwy Stg 2	6.54	5.54	-	6.54	5.54	-	-	-	-	-	-	-
Follow-up Hdwy	3.52	4.02	3.32	3.52	4.02	3.32	2.34	-	-	2.37	-	-
Pot Cap-1 Maneuver	66	31	598	33	29	329	708	-	-	343	-	-
Stage 1	335	387	-	108	161	-	-	-	-	-	-	-
Stage 2	335	161	-	581	365	-	-	-	-	-	-	-
Platoon blocked, %								-	-		-	-
Mov Cap-1 Maneuver	63	30	598	29	28	329	708	-	-	343	-	-
Mov Cap-2 Maneuver	63	30	-	29	28	-	-	-	-	-	-	-
Stage 1	330	377	-	106	158	-	-	-	-	-	-	-
Stage 2	323	158	-	551	356	-	-	-	-	-	-	-

Approach	EB	WB	NB	SB
HCM Control Delay, s	74.6	71.8	0.1	0.2
HCM LOS	F	F		

Minor Lane/Major Mvmt	NBL	NBT	NBR	EBLn1	WBLn1	SBL	SBT	SBR
Capacity (veh/h)	708	-	-	84	65	343	-	-
HCM Lane V/C Ratio	0.016	-	-	0.407	0.175	0.026	-	-
HCM Control Delay (s)	10.2	-	-	74.6	71.8	15.8	-	-
HCM Lane LOS	B	-	-	F	F	C	-	-
HCM 95th %tile Q(veh)	0	-	-	1.6	0.6	0.1	-	-

MOVEMENT SUMMARY

Site: 1 [1. SR 124 / US Highway 12 Westbound Ramp (2033-AM-With-Project(Huntsman)) (Site Folder: 2033-AM-With-Project (Huntsman))]

SR 124 / US Highway 12 Westbound Ramp
Site Category: (None)
Roundabout

Vehicle Movement Performance

Mov ID	Turn	INPUT VOLUMES [Total veh/h	HV] %	DEMAND FLOWS [Total veh/h	HV] %	Deg. Satn v/c	Aver. Delay sec	Level of Service	95% BACK OF QUEUE [Veh. veh	Dist] ft	Prop. Que	Effective Stop Rate	Aver. No. Cycles	Aver. Speed mph
South: SR 124														
3u	U	1	2.0	1	2.0	0.435	11.0	LOS B	0.0	0.0	0.00	0.62	0.00	35.4
3	L2	402	9.0	484	9.0	0.435	9.1	LOS A	0.0	0.0	0.00	0.62	0.00	34.6
8	T1	234	8.0	282	8.0	0.435	4.9	LOS A	0.0	0.0	0.00	0.62	0.00	34.9
Approach		637	8.6	767	8.6	0.435	7.6	LOS A	0.0	0.0	0.00	0.62	0.00	34.7
East: US Highway 12 Westbound Ramp														
1	L2	187	9.0	225	9.0	0.400	16.3	LOS B	2.4	64.1	0.76	0.96	0.86	28.0
16	R2	7	17.0	8	17.0	0.400	12.9	LOS B	2.4	64.1	0.76	0.96	0.86	27.5
Approach		194	9.3	234	9.3	0.400	16.2	LOS B	2.4	64.1	0.76	0.96	0.86	28.0
North: SR 124														
4	T1	127	6.0	153	6.0	0.200	9.2	LOS A	1.2	30.5	0.71	0.76	0.71	34.1
14	R2	169	5.0	204	5.0	0.210	7.1	LOS A	1.1	27.6	0.55	0.69	0.55	34.4
Approach		296	5.4	357	5.4	0.210	8.0	LOS A	1.2	30.5	0.62	0.72	0.62	34.2
All Vehicles		1127	7.9	1358	7.9	0.435	9.2	LOS A	2.4	64.1	0.29	0.71	0.31	33.2

Site Level of Service (LOS) Method: Delay & Degree of Saturation (SIDRA). Site LOS Method is specified in the Parameter Settings dialog (Site tab).
Roundabout LOS Method: Same as Signalised Intersections.
Vehicle movement LOS values are based on average delay and v/c ratio (degree of saturation) per movement.
Intersection and Approach LOS values are based on average delay for all movements (v/c not used).
Roundabout Capacity Model: SIDRA Standard.
Delay Model: SIDRA Standard (Geometric Delay is included).
Queue Model: HCM Queue Formula.
Gap-Acceptance Capacity: SIDRA Standard (Akçelik M3D).
HV (%) values are calculated for All Movement Classes of All Heavy Vehicle Model Designation.

MOVEMENT SUMMARY

Site: 1 [2. SR 124 and 5th Avenue / Gateway Road and US Highway 12 Eastbound Ramp (2033-AM-With-Project(Hunts (Site Folder: 2033-AM-With-Project(Huntsman))]

SR 124 and 5th Avenue / Gateway Road and US Highway 12 Eastbound Ramp
Site Category: (None)
Roundabout

Vehicle Movement Performance

Mov ID	Turn	INPUT VOLUMES [Total veh/h	HV] %	DEMAND FLOWS [Total veh/h	HV] %	Deg. Satn v/c	Aver. Delay sec	Level of Service	95% BACK OF QUEUE [Veh. veh	Dist] ft	Prop. Que	Effective Stop Rate	Aver. No. Cycles	Aver. Speed mph
South: 5th Avenue														
3	L2	12	2.0	14	2.0	0.757	8.5	LOS A	9.2	240.9	0.76	0.64	0.82	24.3
8	T1	564	3.0	664	3.0	0.757	4.5	LOS A	9.2	240.9	0.76	0.64	0.82	24.2
18	R2	58	33.0	68	33.0	0.757	7.4	LOS A	9.2	240.9	0.76	0.64	0.82	24.4
Approach		634	5.7	746	5.7	0.757	4.9	LOS A	9.2	240.9	0.76	0.64	0.82	24.2
East: US Highway 12 Westbound Ramp														
1	L2	688	2.0	809	2.0	1.375	189.0	LOS F	104.7	2658.6	1.00	4.26	8.59	8.9
6	T1	172	2.0	202	2.0	1.375	184.8	LOS F	104.7	2658.6	1.00	4.26	8.59	8.9
16	R2	179	10.0	211	10.0	0.138	3.6	LOS A	0.0	0.0	0.00	0.48	0.00	32.6
Approach		1039	3.4	1222	3.4	1.375	156.4	LOS F	104.7	2658.6	0.83	3.61	7.11	10.2
North: SR 124														
7	L2	9	2.0	11	2.0	0.749	20.6	LOS C	7.1	196.7	0.97	1.15	1.40	30.2
4	T1	257	7.0	302	7.0	0.749	16.8	LOS B	7.1	196.7	0.97	1.15	1.40	30.3
14	R2	47	50.0	55	50.0	0.749	20.4	LOS C	7.1	196.7	0.97	1.15	1.40	28.6
Approach		313	13.3	368	13.3	0.749	17.4	LOS B	7.1	196.7	0.97	1.15	1.40	30.0
West: Gateway Road														
5	L2	91	20.0	107	20.0	0.401	16.1	LOS B	2.3	72.0	0.86	1.00	0.98	21.7
2	T1	13	100.0	15	100.0	0.401	22.4	LOS C	2.3	72.0	0.86	1.00	0.98	21.5
12	R2	8	17.0	9	17.0	0.401	12.3	LOS B	2.3	72.0	0.86	1.00	0.98	21.2
Approach		112	29.1	132	29.1	0.401	16.6	LOS B	2.3	72.0	0.86	1.00	0.98	21.6
All Vehicles		2098	6.9	2468	6.9	1.375	82.4	LOS F	104.7	2658.6	0.83	2.20	4.03	14.5

Site Level of Service (LOS) Method: Delay & Degree of Saturation (SIDRA). Site LOS Method is specified in the Parameter Settings dialog (Site tab).
Roundabout LOS Method: Same as Signalised Intersections.
Vehicle movement LOS values are based on average delay and v/c ratio (degree of saturation) per movement.
Intersection and Approach LOS values are based on average delay for all movements (v/c not used).
Roundabout Capacity Model: SIDRA Standard.
Delay Model: SIDRA Standard (Geometric Delay is included).
Queue Model: HCM Queue Formula.
Gap-Acceptance Capacity: SIDRA Standard (Akçelik M3D).
HV (%) values are calculated for All Movement Classes of All Heavy Vehicle Model Designation.

Intersection	
Int Delay, s/veh	166.5

Movement	EBL	EBT	EBR	WBL	WBT	WBR	NBL	NBT	NBR	SBL	SBT	SBR
Lane Configurations												
Traffic Vol, veh/h	8	1	1	7	3	471	4	169	16	653	260	41
Future Vol, veh/h	8	1	1	7	3	471	4	169	16	653	260	41
Conflicting Peds, #/hr	0	0	0	0	0	0	0	0	0	0	0	0
Sign Control	Stop	Stop	Stop	Stop	Stop	Stop	Free	Free	Free	Free	Free	Free
RT Channelized	-	-	None	-	-	None	-	-	None	-	-	None
Storage Length	-	-	-	-	-	-	-	-	-	-	-	-
Veh in Median Storage, #	-	0	-	-	0	-	-	0	-	-	0	-
Grade, %	-	0	-	-	0	-	-	0	-	-	0	-
Peak Hour Factor	81	81	81	81	81	81	81	81	81	81	81	81
Heavy Vehicles, %	2	2	2	2	2	8	2	2	2	6	2	2
Mvmt Flow	10	1	1	9	4	581	5	209	20	806	321	51

Major/Minor	Minor2			Minor1			Major1			Major2		
Conflicting Flow All	2481	2198	347	2189	2213	219	372	0	0	229	0	0
Stage 1	1959	1959	-	229	229	-	-	-	-	-	-	-
Stage 2	522	239	-	1960	1984	-	-	-	-	-	-	-
Critical Hdwy	7.12	6.52	6.22	7.12	6.52	6.28	4.12	-	-	4.16	-	-
Critical Hdwy Stg 1	6.12	5.52	-	6.12	5.52	-	-	-	-	-	-	-
Critical Hdwy Stg 2	6.12	5.52	-	6.12	5.52	-	-	-	-	-	-	-
Follow-up Hdwy	3.518	4.018	3.318	3.518	4.018	3.372	2.218	-	-	2.254	-	-
Pot Cap-1 Maneuver	20	45	696	33	44	806	1186	-	-	1316	-	-
Stage 1	82	109	-	774	715	-	-	-	-	-	-	-
Stage 2	538	708	-	82	106	-	-	-	-	-	-	-
Platoon blocked, %								-	-		-	-
Mov Cap-1 Maneuver	~ 2	10	696	11	10	806	1186	-	-	1316	-	-
Mov Cap-2 Maneuver	~ 2	10	-	11	10	-	-	-	-	-	-	-
Stage 1	82	24	-	770	711	-	-	-	-	-	-	-
Stage 2	148	704	-	17	24	-	-	-	-	-	-	-

Approach	EB	WB	NB	SB
HCM Control Delay, $	5489.7	$ 435	0.2	8.2
HCM LOS	F	F		

Minor Lane/Major Mvmt	NBL	NBT	NBR	EBLn1	WBLn1	SBL	SBT	SBR
Capacity (veh/h)	1186	-	-	2	316	1316	-	-
HCM Lane V/C Ratio	0.004	-	-	6.173	1.879	0.613	-	-
HCM Control Delay (s)	8	0	$	5489.7	$ 435	12	0	-
HCM Lane LOS	A	A	-	F	F	B	A	-
HCM 95th %tile Q(veh)	0	-	-	2.9	40.3	4.4	-	-

Notes

~: Volume exceeds capacity $: Delay exceeds 300s +: Computation Not Defined *: All major volume in platoon

Intersection	
Int Delay, s/veh	20.6

Movement	EBL	EBT	EBR	WBL	WBT	WBR	NBL	NBT	NBR	SBL	SBT	SBR
Lane Configurations												
Traffic Vol, veh/h	49	2	2	7	4	84	3	320	2	27	112	13
Future Vol, veh/h	49	2	2	7	4	84	3	320	2	27	112	13
Conflicting Peds, #/hr	0	0	0	0	0	0	0	0	0	0	0	0
Sign Control	Free	Free	Free	Free	Free	Free	Stop	Stop	Stop	Stop	Stop	Stop
RT Channelized	-	-	None	-	-	None	-	-	None	-	-	None
Storage Length	-	-	-	-	-	-	-	-	-	-	-	-
Veh in Median Storage, #	-	0	-	-	0	-	-	0	-	-	0	-
Grade, %	-	0	-	-	0	-	-	0	-	-	0	-
Peak Hour Factor	72	72	72	72	72	72	72	72	72	72	72	72
Heavy Vehicles, %	6	2	2	2	2	5	100	7	2	2	2	2
Mvmt Flow	68	3	3	10	6	117	4	444	3	38	156	18

Major/Minor	Major1			Major2			Minor1			Minor2		
Conflicting Flow All	123	0	0	6	0	0	313	284	5	449	227	65
Stage 1	-	-	-	-	-	-	141	141	-	85	85	-
Stage 2	-	-	-	-	-	-	172	143	-	364	142	-
Critical Hdwy	4.16	-	-	4.12	-	-	8.1	6.57	6.22	7.12	6.52	6.22
Critical Hdwy Stg 1	-	-	-	-	-	-	7.1	5.57	-	6.12	5.52	-
Critical Hdwy Stg 2	-	-	-	-	-	-	7.1	5.57	-	6.12	5.52	-
Follow-up Hdwy	2.254	-	-	2.218	-	-	4.4	4.063	3.318	3.518	4.018	3.318
Pot Cap-1 Maneuver	1440	-	-	1615	-	-	487	617	1078	520	672	999
Stage 1	-	-	-	-	-	-	674	771	-	923	824	-
Stage 2	-	-	-	-	-	-	646	769	-	655	779	-
Platoon blocked, %		-	-		-	-						
Mov Cap-1 Maneuver	1440	-	-	1615	-	-	373	584	1078	188	636	999
Mov Cap-2 Maneuver	-	-	-	-	-	-	373	584	-	188	636	-
Stage 1	-	-	-	-	-	-	642	735	-	880	818	-
Stage 2	-	-	-	-	-	-	510	764	-	246	742	-

Approach	EB	WB	NB	SB
HCM Control Delay, s	7	0.5	29.2	19.5
HCM LOS			D	C

Minor Lane/Major Mvmt	NBLn1	EBL	EBT	EBR	WBL	WBT	WBR	SBLn1
Capacity (veh/h)	583	1440	-	-	1615	-	-	457
HCM Lane V/C Ratio	0.774	0.047	-	-	0.006	-	-	0.462
HCM Control Delay (s)	29.2	7.6	0	-	7.2	0	-	19.5
HCM Lane LOS	D	A	A	-	A	A	-	C
HCM 95th %tile Q(veh)	7.2	0.1	-	-	0	-	-	2.4

Intersection	
Int Delay, s/veh	5.2

Movement	EBL	EBT	EBR	WBL	WBT	WBR	NBL	NBT	NBR	SBL	SBT	SBR
Lane Configurations												
Traffic Vol, veh/h	5	14	0	1	4	10	0	2	8	22	3	1
Future Vol, veh/h	5	14	0	1	4	10	0	2	8	22	3	1
Conflicting Peds, #/hr	0	0	0	0	0	0	1	0	0	0	0	1
Sign Control	Free	Free	Free	Free	Free	Free	Stop	Stop	Stop	Stop	Stop	Stop
RT Channelized	-	-	None	-	-	None	-	-	None	-	-	None
Storage Length	-	-	-	-	-	-	-	-	-	-	-	-
Veh in Median Storage, #	-	0	-	-	0	-	-	0	-	-	0	-
Grade, %	-	0	-	-	0	-	-	0	-	-	0	-
Peak Hour Factor	77	77	77	77	77	77	77	77	77	77	77	77
Heavy Vehicles, %	2	2	2	100	33	20	2	50	2	2	2	2
Mvmt Flow	6	18	0	1	5	13	0	3	10	29	4	1

Major/Minor	Major1			Major2			Minor1			Minor2		
Conflicting Flow All	18	0	0	18	0	0	47	50	18	51	44	13
Stage 1	-	-	-	-	-	-	30	30	-	14	14	-
Stage 2	-	-	-	-	-	-	17	20	-	37	30	-
Critical Hdwy	4.12	-	-	5.1	-	-	7.12	7	6.22	7.12	6.52	6.22
Critical Hdwy Stg 1	-	-	-	-	-	-	6.12	6	-	6.12	5.52	-
Critical Hdwy Stg 2	-	-	-	-	-	-	6.12	6	-	6.12	5.52	-
Follow-up Hdwy	2.218	-	-	3.1	-	-	3.518	4.45	3.318	3.518	4.018	3.318
Pot Cap-1 Maneuver	1599	-	-	1141	-	-	954	757	1061	948	848	1067
Stage 1	-	-	-	-	-	-	987	784	-	1006	884	-
Stage 2	-	-	-	-	-	-	1002	792	-	978	870	-
Platoon blocked, %		-	-		-	-						
Mov Cap-1 Maneuver	1599	-	-	1141	-	-	945	753	1061	933	844	1066
Mov Cap-2 Maneuver	-	-	-	-	-	-	945	753	-	933	844	-
Stage 1	-	-	-	-	-	-	983	781	-	1002	883	-
Stage 2	-	-	-	-	-	-	994	791	-	961	867	-

Approach	EB	WB	NB	SB
HCM Control Delay, s	1.9	0.5	8.7	9
HCM LOS			A	A

Minor Lane/Major Mvmt	NBLn1	EBL	EBT	EBR	WBL	WBT	WBR	SBLn1
Capacity (veh/h)	981	1599	-	-	1141	-	-	926
HCM Lane V/C Ratio	0.013	0.004	-	-	0.001	-	-	0.036
HCM Control Delay (s)	8.7	7.3	0	-	8.2	0	-	9
HCM Lane LOS	A	A	A	-	A	A	-	A
HCM 95th %tile Q(veh)	0	0	-	-	0	-	-	0.1

Intersection	
Int Delay, s/veh	0.7

Movement	EBL	EBT	EBR	WBL	WBT	WBR	NBL	NBT	NBR	SBL	SBT	SBR
Lane Configurations												
Traffic Vol, veh/h	19	0	19	1	0	5	11	532	0	6	466	5
Future Vol, veh/h	19	0	19	1	0	5	11	532	0	6	466	5
Conflicting Peds, #/hr	0	0	0	0	0	0	0	0	0	0	0	0
Sign Control	Stop	Stop	Stop	Stop	Stop	Stop	Free	Free	Free	Free	Free	Free
RT Channelized	-	-	Stop	-	-	Stop	-	-	None	-	-	None
Storage Length	-	-	-	-	-	-	610	-	600	565	-	550
Veh in Median Storage, #	-	0	-	-	0	-	-	0	-	-	0	-
Grade, %	-	0	-	-	0	-	-	0	-	-	0	-
Peak Hour Factor	90	90	90	90	90	90	90	90	90	90	90	90
Heavy Vehicles, %	7	2	2	2	2	2	33	13	2	2	15	25
Mvmt Flow	21	0	21	1	0	6	12	591	0	7	518	6

Major/Minor	Minor2			Minor1			Major1			Major2		
Conflicting Flow All	852	1147	259	888	1153	296	524	0	0	591	0	0
Stage 1	532	532	-	615	615	-	-	-	-	-	-	-
Stage 2	320	615	-	273	538	-	-	-	-	-	-	-
Critical Hdwy	7.64	6.54	6.94	7.54	6.54	6.94	4.76	-	-	4.14	-	-
Critical Hdwy Stg 1	6.64	5.54	-	6.54	5.54	-	-	-	-	-	-	-
Critical Hdwy Stg 2	6.64	5.54	-	6.54	5.54	-	-	-	-	-	-	-
Follow-up Hdwy	3.57	4.02	3.32	3.52	4.02	3.32	2.53	-	-	2.22	-	-
Pot Cap-1 Maneuver	245	198	740	238	196	700	851	-	-	981	-	-
Stage 1	486	524	-	445	480	-	-	-	-	-	-	-
Stage 2	652	480	-	710	521	-	-	-	-	-	-	-
Platoon blocked, %								-	-		-	-
Mov Cap-1 Maneuver	239	194	740	228	192	700	851	-	-	981	-	-
Mov Cap-2 Maneuver	239	194	-	228	192	-	-	-	-	-	-	-
Stage 1	479	520	-	439	473	-	-	-	-	-	-	-
Stage 2	638	473	-	685	517	-	-	-	-	-	-	-

Approach	EB	WB	NB	SB
HCM Control Delay, s	13.3	9.3	0.2	0.1
HCM LOS	B	A		

Minor Lane/Major Mvmt	NBL	NBT	NBR	EBLn1	WBLn1	SBL	SBT	SBR
Capacity (veh/h)	851	-	-	478	840	981	-	-
HCM Lane V/C Ratio	0.014	-	-	0.088	0.008	0.007	-	-
HCM Control Delay (s)	9.3	-	-	13.3	9.3	8.7	-	-
HCM Lane LOS	A	-	-	B	A	A	-	-
HCM 95th %tile Q(veh)	0	-	-	0.3	0	0	-	-

Intersection	
Int Delay, s/veh	6.5

Movement	EBL	EBR	NBL	NBT	SBT	SBR
Lane Configurations						
Traffic Vol, veh/h	182	6	2	58	24	64
Future Vol, veh/h	182	6	2	58	24	64
Conflicting Peds, #/hr	0	0	0	0	0	0
Sign Control	Stop	Stop	Free	Free	Free	Free
RT Channelized	-	None	-	None	-	None
Storage Length	0	-	-	-	-	-
Veh in Median Storage, #	0	-	-	0	0	-
Grade, %	0	-	-	0	0	-
Peak Hour Factor	69	69	69	69	69	69
Heavy Vehicles, %	2	2	2	19	2	2
Mvmt Flow	264	9	3	84	35	93

Major/Minor	Minor2		Major1		Major2	
Conflicting Flow All	172	82	128	0	-	0
Stage 1	82	-	-	-	-	-
Stage 2	90	-	-	-	-	-
Critical Hdwy	6.42	6.22	4.12	-	-	-
Critical Hdwy Stg 1	5.42	-	-	-	-	-
Critical Hdwy Stg 2	5.42	-	-	-	-	-
Follow-up Hdwy	3.518	3.318	2.218	-	-	-
Pot Cap-1 Maneuver	818	978	1458	-	-	-
Stage 1	941	-	-	-	-	-
Stage 2	934	-	-	-	-	-
Platoon blocked, %				-	-	-
Mov Cap-1 Maneuver	816	978	1458	-	-	-
Mov Cap-2 Maneuver	816	-	-	-	-	-
Stage 1	939	-	-	-	-	-
Stage 2	934	-	-	-	-	-

Approach	EB	NB	SB
HCM Control Delay, s	11.6	0.2	0
HCM LOS	B		

Minor Lane/Major Mvmt	NBL	NBT	EBLn1	SBT	SBR
Capacity (veh/h)	1458	-	820	-	-
HCM Lane V/C Ratio	0.002	-	0.332	-	-
HCM Control Delay (s)	7.5	0	11.6	-	-
HCM Lane LOS	A	A	B	-	-
HCM 95th %tile Q(veh)	0	-	1.5	-	-

Intersection	
Int Delay, s/veh	4.2

Movement	EBL	EBR	NBL	NBT	SBT	SBR
Lane Configurations						
Traffic Vol, veh/h	38	6	2	22	17	13
Future Vol, veh/h	38	6	2	22	17	13
Conflicting Peds, #/hr	0	0	0	0	0	0
Sign Control	Stop	Stop	Free	Free	Free	Free
RT Channelized	-	None	-	None	-	None
Storage Length	0	-	-	-	-	-
Veh in Median Storage, #	0	-	-	0	0	-
Grade, %	0	-	-	0	0	-
Peak Hour Factor	69	69	69	69	69	69
Heavy Vehicles, %	2	2	2	16	2	2
Mvmt Flow	55	9	3	32	25	19

Major/Minor	Minor2		Major1		Major2	
Conflicting Flow All	73	35	44	0	-	0
Stage 1	35	-	-	-	-	-
Stage 2	38	-	-	-	-	-
Critical Hdwy	6.42	6.22	4.12	-	-	-
Critical Hdwy Stg 1	5.42	-	-	-	-	-
Critical Hdwy Stg 2	5.42	-	-	-	-	-
Follow-up Hdwy	3.518	3.318	2.218	-	-	-
Pot Cap-1 Maneuver	931	1038	1564	-	-	-
Stage 1	987	-	-	-	-	-
Stage 2	984	-	-	-	-	-
Platoon blocked, %				-	-	-
Mov Cap-1 Maneuver	929	1038	1564	-	-	-
Mov Cap-2 Maneuver	929	-	-	-	-	-
Stage 1	985	-	-	-	-	-
Stage 2	984	-	-	-	-	-

Approach	EB	NB	SB
HCM Control Delay, s	9.1	0.6	0
HCM LOS	A		

Minor Lane/Major Mvmt	NBL	NBT	EBLn1	SBT	SBR
Capacity (veh/h)	1564	-	942	-	-
HCM Lane V/C Ratio	0.002	-	0.068	-	-
HCM Control Delay (s)	7.3	0	9.1	-	-
HCM Lane LOS	A	A	A	-	-
HCM 95th %tile Q(veh)	0	-	0.2	-	-

MOVEMENT SUMMARY

Site: 1 [1. SR 124 / US Highway 12 Westbound Ramp (2033-PM-With-Project(Huntsman)) (Site Folder: 2033-PM-With-Project (Huntsman))]

SR 124 / US Highway 12 Westbound Ramp
Site Category: (None)
Roundabout

Vehicle Movement Performance

Mov ID	Turn	INPUT VOLUMES [Total veh/h	HV] %	DEMAND FLOWS [Total veh/h	HV] %	Deg. Satn v/c	Aver. Delay sec	Level of Service	95% BACK OF QUEUE [Veh. veh	Dist] ft	Prop. Que	Effective Stop Rate	Aver. No. Cycles	Aver. Speed mph
South: SR 124														
3u	U	4	2.0	5	2.0	0.816	11.6	LOS B	0.0	0.0	0.00	0.64	0.00	34.6
3	L2	922	6.0	1072	6.0	0.816	9.7	LOS A	0.0	0.0	0.00	0.64	0.00	34.0
8	T1	341	4.0	397	4.0	0.816	5.4	LOS A	0.0	0.0	0.00	0.64	0.00	34.2
Approach		1267	5.4	1473	5.4	0.816	8.5	LOS A	0.0	0.0	0.00	0.64	0.00	34.0
East: US Highway 12 Westbound Ramp														
1	L2	151	11.0	176	11.0	1.141	185.8	LOS F	17.6	476.5	1.00	1.97	3.97	8.9
16	R2	6	2.0	7	2.0	1.141	177.7	LOS F	17.6	476.5	1.00	1.97	3.97	8.9
Approach		157	10.7	183	10.7	1.141	185.5	LOS F	17.6	476.5	1.00	1.97	3.97	8.9
North: SR 124														
4	T1	77	11.0	90	11.0	0.227	21.1	LOS C	1.5	41.2	0.93	0.95	0.93	28.8
14	R2	602	3.0	700	3.0	1.164	121.1	LOS F	54.2	1388.2	1.00	2.84	6.01	12.2
Approach		679	3.9	790	3.9	1.164	109.7	LOS F	54.2	1388.2	0.99	2.63	5.44	13.1
All Vehicles		2103	5.3	2445	5.3	1.164	54.4	LOS D	54.2	1388.2	0.40	1.38	2.05	19.8

Site Level of Service (LOS) Method: Delay & Degree of Saturation (SIDRA). Site LOS Method is specified in the Parameter Settings dialog (Site tab).
Roundabout LOS Method: Same as Signalised Intersections.
Vehicle movement LOS values are based on average delay and v/c ratio (degree of saturation) per movement.
Intersection and Approach LOS values are based on average delay for all movements (v/c not used).
Roundabout Capacity Model: SIDRA Standard.
Delay Model: SIDRA Standard (Geometric Delay is included).
Queue Model: HCM Queue Formula.
Gap-Acceptance Capacity: SIDRA Standard (Akçelik M3D).
HV (%) values are calculated for All Movement Classes of All Heavy Vehicle Model Designation.

MOVEMENT SUMMARY

Site: 1 [2. SR 124 and 5th Avenue / Gateway Road and US Highway 12 Eastbound Ramp (2033-PM-With-Project(Hunts (Site Folder: 2033-PM-With-Project(Huntsman))]

SR 124 and 5th Avenue / Gateway Road and US Highway 12 Eastbound Ramp
Site Category: (None)
Roundabout

Vehicle Movement Performance

Mov ID	Turn	INPUT VOLUMES [Total veh/h	HV] %	DEMAND FLOWS [Total veh/h	HV] %	Deg. Satn v/c	Aver. Delay sec	Level of Service	95% BACK OF QUEUE [Veh. veh	Dist] ft	Prop. Que	Effective Stop Rate	Aver. No. Cycles	Aver. Speed mph
South: 5th Avenue														
3	L2	4	2.0	4	2.0	1.164	89.3	LOS F	75.7	1922.9	1.00	2.97	3.96	12.9
8	T1	824	2.0	877	2.0	1.164	85.3	LOS F	75.7	1922.9	1.00	2.97	3.96	12.9
18	R2	219	2.0	233	2.0	1.164	85.8	LOS F	75.7	1922.9	1.00	2.97	3.96	12.8
Approach		1047	2.0	1114	2.0	1.164	85.4	LOS F	75.7	1922.9	1.00	2.97	3.96	12.9
East: US Highway 12 Westbound Ramp														
1	L2	735	2.0	782	2.0	1.547	267.6	LOS F	115.7	2951.3	1.00	4.37	9.06	6.8
6	T1	94	7.0	100	7.0	1.547	263.6	LOS F	115.7	2951.3	1.00	4.37	9.06	6.8
16	R2	252	6.0	268	6.0	0.170	3.5	LOS A	0.0	0.0	0.00	0.48	0.00	32.6
Approach		1081	3.4	1150	3.4	1.547	205.7	LOS F	115.7	2951.3	0.77	3.46	6.95	8.3
North: SR 124														
7	L2	5	25.0	5	25.0	0.375	13.2	LOS B	2.2	57.0	0.72	0.78	0.72	33.4
4	T1	213	4.0	227	4.0	0.375	7.7	LOS A	2.2	57.0	0.72	0.78	0.72	34.4
14	R2	21	17.0	22	17.0	0.375	8.3	LOS A	2.2	57.0	0.72	0.78	0.72	33.2
Approach		239	5.6	254	5.6	0.375	7.9	LOS A	2.2	57.0	0.72	0.78	0.72	34.3
West: Gateway Road														
5	L2	177	4.0	188	4.0	0.434	11.9	LOS B	2.9	74.9	0.83	0.96	0.91	22.9
2	T1	45	2.0	48	2.0	0.434	7.8	LOS A	2.9	74.9	0.83	0.96	0.91	22.8
12	R2	11	2.0	12	2.0	0.434	8.2	LOS A	2.9	74.9	0.83	0.96	0.91	22.4
Approach		233	3.5	248	3.5	0.434	10.9	LOS B	2.9	74.9	0.83	0.96	0.91	22.9
All Vehicles		2600	3.0	2766	3.0	1.547	121.6	LOS F	115.7	2951.3	0.86	2.79	4.63	11.3

Site Level of Service (LOS) Method: Delay & Degree of Saturation (SIDRA). Site LOS Method is specified in the Parameter Settings dialog (Site tab).
Roundabout LOS Method: Same as Signalised Intersections.
Vehicle movement LOS values are based on average delay and v/c ratio (degree of saturation) per movement.
Intersection and Approach LOS values are based on average delay for all movements (v/c not used).
Roundabout Capacity Model: SIDRA Standard.
Delay Model: SIDRA Standard (Geometric Delay is included).
Queue Model: HCM Queue Formula.
Gap-Acceptance Capacity: SIDRA Standard (Akçelik M3D).
HV (%) values are calculated for All Movement Classes of All Heavy Vehicle Model Designation.

Intersection	
Int Delay, s/veh	517.3

Movement	EBL	EBT	EBR	WBL	WBT	WBR	NBL	NBT	NBR	SBL	SBT	SBR
Lane Configurations												
Traffic Vol, veh/h	43	3	3	28	1	845	2	156	16	758	189	19
Future Vol, veh/h	43	3	3	28	1	845	2	156	16	758	189	19
Conflicting Peds, #/hr	0	0	0	0	0	0	0	0	0	0	0	0
Sign Control	Stop	Stop	Stop	Stop	Stop	Stop	Free	Free	Free	Free	Free	Free
RT Channelized	-	-	None	-	-	None	-	-	None	-	-	None
Storage Length	-	-	-	-	-	-	-	-	-	-	-	-
Veh in Median Storage, #	-	0	-	-	0	-	-	0	-	-	0	-
Grade, %	-	0	-	-	0	-	-	0	-	-	0	-
Peak Hour Factor	89	89	89	89	89	89	89	89	89	89	89	89
Heavy Vehicles, %	2	2	2	2	2	3	2	2	2	2	3	2
Mvmt Flow	48	3	3	31	1	949	2	175	18	852	212	21

Major/Minor	Minor2			Minor1			Major1			Major2		
Conflicting Flow All	2590	2124	223	2118	2125	184	233	0	0	193	0	0
Stage 1	1927	1927	-	188	188	-	-	-	-	-	-	-
Stage 2	663	197	-	1930	1937	-	-	-	-	-	-	-
Critical Hdwy	7.12	6.52	6.22	7.12	6.52	6.23	4.12	-	-	4.12	-	-
Critical Hdwy Stg 1	6.12	5.52	-	6.12	5.52	-	-	-	-	-	-	-
Critical Hdwy Stg 2	6.12	5.52	-	6.12	5.52	-	-	-	-	-	-	-
Follow-up Hdwy	3.518	4.018	3.318	3.518	4.018	3.327	2.218	-	-	2.218	-	-
Pot Cap-1 Maneuver	~ 17	50	817	37	50	~ 856	1335	-	-	1380	-	-
Stage 1	86	114	-	814	745	-	-	-	-	-	-	-
Stage 2	450	738	-	86	112	-	-	-	-	-	-	-
Platoon blocked, %								-	-		-	-
Mov Cap-1 Maneuver	-	14	817	~ 13	14	~ 856	1335	-	-	1380	-	-
Mov Cap-2 Maneuver	-	14	-	~ 13	14	-	-	-	-	-	-	-
Stage 1	86	33	-	812	744	-	-	-	-	-	-	-
Stage 2	-	737	-	~ 22	32	-	-	-	-	-	-	-

Approach	EB	WB	NB	SB
HCM Control Delay, s		$ 1210.9	0.1	9.2
HCM LOS	-	F		

Minor Lane/Major Mvmt	NBL	NBT	NBR	EBLn1	WBLn1	SBL	SBT	SBR
Capacity (veh/h)	1335	-	-	-	272	1380	-	-
HCM Lane V/C Ratio	0.002	-	-	-	3.61	0.617	-	-
HCM Control Delay (s)	7.7	0	-	-	$ 1210.9	11.7	0	-
HCM Lane LOS	A	A	-	-	F	B	A	-
HCM 95th %tile Q(veh)	0	-	-	-	92.7	4.5	-	-

Notes

~: Volume exceeds capacity $: Delay exceeds 300s +: Computation Not Defined *: All major volume in platoon

Intersection	
Int Delay, s/veh	16.9

Movement	EBL	EBT	EBR	WBL	WBT	WBR	NBL	NBT	NBR	SBL	SBT	SBR
Lane Configurations												
Traffic Vol, veh/h	14	4	9	12	5	35	3	199	4	67	361	28
Future Vol, veh/h	14	4	9	12	5	35	3	199	4	67	361	28
Conflicting Peds, #/hr	0	0	0	0	0	0	0	0	0	0	0	0
Sign Control	Free	Free	Free	Free	Free	Free	Stop	Stop	Stop	Stop	Stop	Stop
RT Channelized	-	-	None	-	-	None	-	-	None	-	-	None
Storage Length	-	-	-	-	-	-	-	-	-	-	-	-
Veh in Median Storage, #	-	0	-	-	0	-	-	0	-	-	0	-
Grade, %	-	0	-	-	0	-	-	0	-	-	0	-
Peak Hour Factor	85	85	85	85	85	85	85	85	85	85	85	85
Heavy Vehicles, %	2	2	2	14	2	2	2	2	2	2	2	2
Mvmt Flow	16	5	11	14	6	41	4	234	5	79	425	33

Major/Minor	Major1			Major2			Minor1			Minor2		
Conflicting Flow All	47	0	0	16	0	0	327	118	11	217	103	27
Stage 1	-	-	-	-	-	-	43	43	-	55	55	-
Stage 2	-	-	-	-	-	-	284	75	-	162	48	-
Critical Hdwy	4.12	-	-	4.24	-	-	7.12	6.52	6.22	7.12	6.52	6.22
Critical Hdwy Stg 1	-	-	-	-	-	-	6.12	5.52	-	6.12	5.52	-
Critical Hdwy Stg 2	-	-	-	-	-	-	6.12	5.52	-	6.12	5.52	-
Follow-up Hdwy	2.218	-	-	2.326	-	-	3.518	4.018	3.318	3.518	4.018	3.318
Pot Cap-1 Maneuver	1560	-	-	1527	-	-	626	772	1070	739	787	1048
Stage 1	-	-	-	-	-	-	971	859	-	957	849	-
Stage 2	-	-	-	-	-	-	723	833	-	840	855	-
Platoon blocked, %		-	-		-	-						
Mov Cap-1 Maneuver	1560	-	-	1527	-	-	338	757	1070	552	772	1048
Mov Cap-2 Maneuver	-	-	-	-	-	-	338	757	-	552	772	-
Stage 1	-	-	-	-	-	-	961	850	-	947	841	-
Stage 2	-	-	-	-	-	-	344	826	-	600	846	-

Approach	EB	WB	NB	SB
HCM Control Delay, s	3.8	1.7	12.1	21.5
HCM LOS			B	C

Minor Lane/Major Mvmt	NBLn1	EBL	EBT	EBR	WBL	WBT	WBR	SBLn1
Capacity (veh/h)	748	1560	-	-	1527	-	-	741
HCM Lane V/C Ratio	0.324	0.011	-	-	0.009	-	-	0.724
HCM Control Delay (s)	12.1	7.3	0	-	7.4	0	-	21.5
HCM Lane LOS	B	A	A	-	A	A	-	C
HCM 95th %tile Q(veh)	1.4	0	-	-	0	-	-	6.3

Intersection	
Int Delay, s/veh	3.4

Movement	EBL	EBT	EBR	WBL	WBT	WBR	NBL	NBT	NBR	SBL	SBT	SBR
Lane Configurations												
Traffic Vol, veh/h	1	11	0	14	25	33	0	2	3	19	5	1
Future Vol, veh/h	1	11	0	14	25	33	0	2	3	19	5	1
Conflicting Peds, #/hr	0	0	0	0	0	0	0	0	0	0	0	0
Sign Control	Free	Free	Free	Free	Free	Free	Stop	Stop	Stop	Stop	Stop	Stop
RT Channelized	-	-	None	-	-	None	-	-	None	-	-	None
Storage Length	-	-	-	-	-	-	-	-	-	-	-	-
Veh in Median Storage, #	-	0	-	-	0	-	-	0	-	-	0	-
Grade, %	-	0	-	-	0	-	-	0	-	-	0	-
Peak Hour Factor	86	86	86	86	86	86	86	86	86	86	86	86
Heavy Vehicles, %	2	11	2	2	5	2	2	2	2	2	2	2
Mvmt Flow	1	13	0	16	29	38	0	2	3	22	6	1

Major/Minor	Major1			Major2			Minor1			Minor2		
Conflicting Flow All	67	0	0	13	0	0	99	114	13	98	95	48
Stage 1	-	-	-	-	-	-	15	15	-	80	80	-
Stage 2	-	-	-	-	-	-	84	99	-	18	15	-
Critical Hdwy	4.12	-	-	4.12	-	-	7.12	6.52	6.22	7.12	6.52	6.22
Critical Hdwy Stg 1	-	-	-	-	-	-	6.12	5.52	-	6.12	5.52	-
Critical Hdwy Stg 2	-	-	-	-	-	-	6.12	5.52	-	6.12	5.52	-
Follow-up Hdwy	2.218	-	-	2.218	-	-	3.518	4.018	3.318	3.518	4.018	3.318
Pot Cap-1 Maneuver	1535	-	-	1606	-	-	883	776	1067	884	795	1021
Stage 1	-	-	-	-	-	-	1005	883	-	929	828	-
Stage 2	-	-	-	-	-	-	924	813	-	1001	883	-
Platoon blocked, %		-	-		-	-						
Mov Cap-1 Maneuver	1535	-	-	1606	-	-	870	767	1067	872	786	1021
Mov Cap-2 Maneuver	-	-	-	-	-	-	870	767	-	872	786	-
Stage 1	-	-	-	-	-	-	1004	882	-	928	820	-
Stage 2	-	-	-	-	-	-	907	805	-	994	882	-

Approach	EB	WB	NB	SB
HCM Control Delay, s	0.6	1.4	8.9	9.3
HCM LOS			A	A

Minor Lane/Major Mvmt	NBLn1	EBL	EBT	EBR	WBL	WBT	WBR	SBLn1
Capacity (veh/h)	923	1535	-	-	1606	-	-	858
HCM Lane V/C Ratio	0.006	0.001	-	-	0.01	-	-	0.034
HCM Control Delay (s)	8.9	7.3	0	-	7.3	0	-	9.3
HCM Lane LOS	A	A	A	-	A	A	-	A
HCM 95th %tile Q(veh)	0	0	-	-	0	-	-	0.1

Intersection	
Int Delay, s/veh	1.7

Movement	EBL	EBT	EBR	WBL	WBT	WBR	NBL	NBT	NBR	SBL	SBT	SBR
Lane Configurations												
Traffic Vol, veh/h	16	2	17	4	0	5	23	1260	1	7	634	42
Future Vol, veh/h	16	2	17	4	0	5	23	1260	1	7	634	42
Conflicting Peds, #/hr	0	0	0	0	0	0	0	0	0	0	0	0
Sign Control	Stop	Stop	Stop	Stop	Stop	Stop	Free	Free	Free	Free	Free	Free
RT Channelized	-	-	Stop	-	-	Stop	-	-	None	-	-	None
Storage Length	-	-	-	-	-	-	610	-	600	565	-	550
Veh in Median Storage, #	-	0	-	-	0	-	-	0	-	-	0	-
Grade, %	-	0	-	-	0	-	-	0	-	-	0	-
Peak Hour Factor	79	79	79	79	79	79	79	79	79	79	79	79
Heavy Vehicles, %	2	2	2	2	2	2	14	6	2	17	19	6
Mvmt Flow	20	3	22	5	0	6	29	1595	1	9	803	53

Major/Minor	Minor2			Minor1			Major1			Major2		
Conflicting Flow All	1677	2475	402	2074	2527	798	856	0	0	1596	0	0
Stage 1	821	821	-	1653	1653	-	-	-	-	-	-	-
Stage 2	856	1654	-	421	874	-	-	-	-	-	-	-
Critical Hdwy	7.54	6.54	6.94	7.54	6.54	6.94	4.38	-	-	4.44	-	-
Critical Hdwy Stg 1	6.54	5.54	-	6.54	5.54	-	-	-	-	-	-	-
Critical Hdwy Stg 2	6.54	5.54	-	6.54	5.54	-	-	-	-	-	-	-
Follow-up Hdwy	3.52	4.02	3.32	3.52	4.02	3.32	2.34	-	-	2.37	-	-
Pot Cap-1 Maneuver	62	29	598	31	27	329	708	-	-	343	-	-
Stage 1	335	387	-	102	154	-	-	-	-	-	-	-
Stage 2	319	154	-	581	365	-	-	-	-	-	-	-
Platoon blocked, %								-	-		-	-
Mov Cap-1 Maneuver	58	27	598	26	25	329	708	-	-	343	-	-
Mov Cap-2 Maneuver	58	27	-	26	25	-	-	-	-	-	-	-
Stage 1	321	377	-	98	148	-	-	-	-	-	-	-
Stage 2	300	148	-	542	356	-	-	-	-	-	-	-

Approach	EB	WB	NB	SB
HCM Control Delay, s	67	80.1	0.2	0.2
HCM LOS	F	F		

Minor Lane/Major Mvmt	NBL	NBT	NBR	EBLn1	WBLn1	SBL	SBT	SBR
Capacity (veh/h)	708	-	-	100	59	343	-	-
HCM Lane V/C Ratio	0.041	-	-	0.443	0.193	0.026	-	-
HCM Control Delay (s)	10.3	-	-	67	80.1	15.8	-	-
HCM Lane LOS	B	-	-	F	F	C	-	-
HCM 95th %tile Q(veh)	0.1	-	-	1.9	0.6	0.1	-	-

Intersection	
Int Delay, s/veh	3.9

Movement	EBL	EBR	NBL	NBT	SBT	SBR
Lane Configurations						
Traffic Vol, veh/h	127	4	8	41	60	217
Future Vol, veh/h	127	4	8	41	60	217
Conflicting Peds, #/hr	0	0	0	0	0	0
Sign Control	Stop	Stop	Free	Free	Free	Free
RT Channelized	-	None	-	None	-	None
Storage Length	0	-	-	-	-	-
Veh in Median Storage, #	0	-	-	0	0	-
Grade, %	0	-	-	0	0	-
Peak Hour Factor	64	64	64	64	64	64
Heavy Vehicles, %	2	2	2	2	2	2
Mvmt Flow	198	6	13	64	94	339

Major/Minor	Minor2		Major1		Major2	
Conflicting Flow All	354	264	433	0	-	0
Stage 1	264	-	-	-	-	-
Stage 2	90	-	-	-	-	-
Critical Hdwy	6.42	6.22	4.12	-	-	-
Critical Hdwy Stg 1	5.42	-	-	-	-	-
Critical Hdwy Stg 2	5.42	-	-	-	-	-
Follow-up Hdwy	3.518	3.318	2.218	-	-	-
Pot Cap-1 Maneuver	644	775	1127	-	-	-
Stage 1	780	-	-	-	-	-
Stage 2	934	-	-	-	-	-
Platoon blocked, %				-	-	-
Mov Cap-1 Maneuver	636	775	1127	-	-	-
Mov Cap-2 Maneuver	636	-	-	-	-	-
Stage 1	771	-	-	-	-	-
Stage 2	934	-	-	-	-	-

Approach	EB	NB	SB
HCM Control Delay, s	13.2	1.3	0
HCM LOS	B		

Minor Lane/Major Mvmt	NBL	NBT	EBLn1	SBT	SBR
Capacity (veh/h)	1127	-	640	-	-
HCM Lane V/C Ratio	0.011	-	0.32	-	-
HCM Control Delay (s)	8.2	0	13.2	-	-
HCM Lane LOS	A	A	B	-	-
HCM 95th %tile Q(veh)	0	-	1.4	-	-

Intersection	
Int Delay, s/veh	2.7

Movement	EBL	EBR	NBL	NBT	SBT	SBR
Lane Configurations						
Traffic Vol, veh/h	27	4	6	22	19	45
Future Vol, veh/h	27	4	6	22	19	45
Conflicting Peds, #/hr	0	0	0	0	0	0
Sign Control	Stop	Stop	Free	Free	Free	Free
RT Channelized	-	None	-	None	-	None
Storage Length	0	-	-	-	-	-
Veh in Median Storage, #	0	-	-	0	0	-
Grade, %	0	-	-	0	0	-
Peak Hour Factor	64	64	64	64	64	64
Heavy Vehicles, %	2	2	2	2	2	2
Mvmt Flow	42	6	9	34	30	70

Major/Minor	Minor2		Major1		Major2	
Conflicting Flow All	117	65	100	0	-	0
Stage 1	65	-	-	-	-	-
Stage 2	52	-	-	-	-	-
Critical Hdwy	6.42	6.22	4.12	-	-	-
Critical Hdwy Stg 1	5.42	-	-	-	-	-
Critical Hdwy Stg 2	5.42	-	-	-	-	-
Follow-up Hdwy	3.518	3.318	2.218	-	-	-
Pot Cap-1 Maneuver	879	999	1493	-	-	-
Stage 1	958	-	-	-	-	-
Stage 2	970	-	-	-	-	-
Platoon blocked, %				-	-	-
Mov Cap-1 Maneuver	874	999	1493	-	-	-
Mov Cap-2 Maneuver	874	-	-	-	-	-
Stage 1	952	-	-	-	-	-
Stage 2	970	-	-	-	-	-

Approach	EB	NB	SB
HCM Control Delay, s	9.3	1.6	0
HCM LOS	A		

Minor Lane/Major Mvmt	NBL	NBT	EBLn1	SBT	SBR
Capacity (veh/h)	1493	-	888	-	-
HCM Lane V/C Ratio	0.006	-	0.055	-	-
HCM Control Delay (s)	7.4	0	9.3	-	-
HCM Lane LOS	A	A	A	-	-
HCM 95th %tile Q(veh)	0	-	0.2	-	-

MOVEMENT SUMMARY

Site: 1 [1. SR 124 / US Highway 12 Westbound Ramp (2033 AM With Both Projects) (Site Folder: 2033-AM-With_Both_Projects)]

SR 124 / US Highway 12 Westbound Ramp
Site Category: (None)
Roundabout

Vehicle Movement Performance

Mov ID	Turn	INPUT VOLUMES [Total veh/h	HV] %	DEMAND FLOWS [Total veh/h	HV] %	Deg. Satn v/c	Aver. Delay sec	Level of Service	95% BACK OF QUEUE [Veh. veh	Dist] ft	Prop. Que	Effective Stop Rate	Aver. No. Cycles	Aver. Speed mph
South: SR 124														
3u	U	1	2.0	1	2.0	0.707	11.3	LOS B	0.0	0.0	0.00	0.64	0.00	34.8
3	L2	781	9.0	941	9.0	0.707	9.4	LOS A	0.0	0.0	0.00	0.64	0.00	34.1
8	T1	245	8.0	295	8.0	0.707	5.1	LOS A	0.0	0.0	0.00	0.64	0.00	34.3
Approach		1027	8.8	1237	8.8	0.707	8.4	LOS A	0.0	0.0	0.00	0.64	0.00	34.1
East: US Highway 12 Westbound Ramp														
1	L2	187	9.0	225	9.0	0.762	64.6	LOS E	9.0	241.4	1.00	1.49	2.29	17.6
16	R2	7	17.0	8	17.0	0.762	62.4	LOS E	9.0	241.4	1.00	1.49	2.29	17.4
Approach		194	9.3	234	9.3	0.762	64.5	LOS E	9.0	241.4	1.00	1.49	2.29	17.6
North: SR 124														
4	T1	131	6.0	158	6.0	0.362	20.2	LOS C	2.6	69.0	0.96	1.00	1.01	29.2
14	R2	169	5.0	204	5.0	0.308	12.7	LOS B	1.9	49.8	0.81	0.89	0.81	31.6
Approach		300	5.4	361	5.4	0.362	16.0	LOS B	2.6	69.0	0.88	0.94	0.90	30.5
All Vehicles		1521	8.2	1833	8.2	0.762	17.1	LOS B	9.0	241.4	0.30	0.81	0.47	29.8

Site Level of Service (LOS) Method: Delay & Degree of Saturation (SIDRA). Site LOS Method is specified in the Parameter Settings dialog (Site tab).
Roundabout LOS Method: Same as Signalised Intersections.
Vehicle movement LOS values are based on average delay and v/c ratio (degree of saturation) per movement.
Intersection and Approach LOS values are based on average delay for all movements (v/c not used).
Roundabout Capacity Model: SIDRA Standard.
Delay Model: SIDRA Standard (Geometric Delay is included).
Queue Model: HCM Queue Formula.
Gap-Acceptance Capacity: SIDRA Standard (Akçelik M3D).
HV (%) values are calculated for All Movement Classes of All Heavy Vehicle Model Designation.

MOVEMENT SUMMARY

Site: 1 [2. SR 124 and 5th Avenue / Gateway Road and US Highway 12 Eastbound Ramp (2033 AM With Both Projects (Site Folder: 2033-AM-With_Both_Projects)]

SR 124 and 5th Avenue / Gateway Road and US Highway 12 Eastbound Ramp
Site Category: (None)
Roundabout

Vehicle Movement Performance

Mov ID	Turn	INPUT VOLUMES [Total veh/h	HV] %	DEMAND FLOWS [Total veh/h	HV] %	Deg. Satn v/c	Aver. Delay sec	Level of Service	95% BACK OF QUEUE [Veh. veh	Dist] ft	Prop. Que	Effective Stop Rate	Aver. No. Cycles	Aver. Speed mph
South: 5th Avenue														
3	L2	12	2.0	14	2.0	0.977	22.2	LOS E	31.7	824.2	1.00	1.18	1.54	21.3
8	T1	748	3.0	880	3.0	0.977	18.3	LOS E	31.7	824.2	1.00	1.18	1.54	21.2
18	R2	58	33.0	68	33.0	0.977	22.4	LOS E	31.7	824.2	1.00	1.18	1.54	21.4
Approach		818	5.1	962	5.1	0.977	18.6	LOS B	31.7	824.2	1.00	1.18	1.54	21.2
East: US Highway 12 Westbound Ramp														
1	L2	750	2.0	882	2.0	2.265	587.9	LOS F	212.6	5399.1	1.00	5.41	11.70	3.5
6	T1	174	2.0	205	2.0	2.265	583.6	LOS F	212.6	5399.1	1.00	5.41	11.70	3.5
16	R2	179	10.0	211	10.0	0.138	3.6	LOS A	0.0	0.0	0.00	0.48	0.00	32.6
Approach		1103	3.3	1298	3.3	2.265	492.4	LOS F	212.6	5399.1	0.84	4.61	9.80	4.0
North: SR 124														
7	L2	9	2.0	11	2.0	0.550	12.8	LOS B	3.9	106.8	0.75	0.88	0.86	33.9
4	T1	260	7.0	306	7.0	0.550	8.9	LOS A	3.9	106.8	0.75	0.88	0.86	34.0
14	R2	48	50.0	56	50.0	0.550	11.4	LOS B	3.9	106.8	0.75	0.88	0.86	31.9
Approach		317	13.4	373	13.4	0.550	9.4	LOS A	3.9	106.8	0.75	0.88	0.86	33.6
West: Gateway Road														
5	L2	100	20.0	118	20.0	0.319	11.6	LOS B	1.6	50.0	0.76	0.88	0.76	22.7
2	T1	13	100.0	15	100.0	0.319	14.7	LOS B	1.6	50.0	0.76	0.88	0.76	22.6
12	R2	8	17.0	9	17.0	0.319	7.8	LOS A	1.6	50.0	0.76	0.88	0.76	22.2
Approach		121	28.4	142	28.4	0.319	11.7	LOS B	1.6	50.0	0.76	0.88	0.76	22.7
All Vehicles		2359	6.6	2775	6.6	2.265	238.5	LOS F	212.6	5399.1	0.88	2.73	5.27	7.2

Site Level of Service (LOS) Method: Delay & Degree of Saturation (SIDRA). Site LOS Method is specified in the Parameter Settings dialog (Site tab).
Roundabout LOS Method: Same as Signalised Intersections.
Vehicle movement LOS values are based on average delay and v/c ratio (degree of saturation) per movement.
Intersection and Approach LOS values are based on average delay for all movements (v/c not used).
Roundabout Capacity Model: SIDRA Standard.
Delay Model: SIDRA Standard (Geometric Delay is included).
Queue Model: HCM Queue Formula.
Gap-Acceptance Capacity: SIDRA Standard (Akçelik M3D).
HV (%) values are calculated for All Movement Classes of All Heavy Vehicle Model Designation.

Intersection	
Int Delay, s/veh	365.6

Movement	EBL	EBT	EBR	WBL	WBT	WBR	NBL	NBT	NBR	SBL	SBT	SBR
Lane Configurations												
Traffic Vol, veh/h	8	1	1	7	3	655	4	169	16	718	260	41
Future Vol, veh/h	8	1	1	7	3	655	4	169	16	718	260	41
Conflicting Peds, #/hr	0	0	0	0	0	0	0	0	0	0	0	0
Sign Control	Stop	Stop	Stop	Stop	Stop	Stop	Free	Free	Free	Free	Free	Free
RT Channelized	-	-	None	-	-	None	-	-	None	-	-	None
Storage Length	-	-	-	-	-	-	-	-	-	-	-	-
Veh in Median Storage, #	-	0	-	-	0	-	-	0	-	-	0	-
Grade, %	-	0	-	-	0	-	-	0	-	-	0	-
Peak Hour Factor	81	81	81	81	81	81	81	81	81	81	81	81
Heavy Vehicles, %	2	2	2	2	2	8	2	2	2	6	2	2
Mvmt Flow	10	1	1	9	4	809	5	209	20	886	321	51

Major/Minor	Minor2			Minor1			Major1			Major2		
Conflicting Flow All	2755	2358	347	2349	2373	219	372	0	0	229	0	0
Stage 1	2119	2119	-	229	229	-	-	-	-	-	-	-
Stage 2	636	239	-	2120	2144	-	-	-	-	-	-	-
Critical Hdwy	7.12	6.52	6.22	7.12	6.52	6.28	4.12	-	-	4.16	-	-
Critical Hdwy Stg 1	6.12	5.52	-	6.12	5.52	-	-	-	-	-	-	-
Critical Hdwy Stg 2	6.12	5.52	-	6.12	5.52	-	-	-	-	-	-	-
Follow-up Hdwy	3.518	4.018	3.318	3.518	4.018	3.372	2.218	-	-	2.254	-	-
Pot Cap-1 Maneuver	13	36	696	25	35	~ 806	1186	-	-	1316	-	-
Stage 1	66	91	-	774	715	-	-	-	-	-	-	-
Stage 2	466	708	-	66	88	-	-	-	-	-	-	-
Platoon blocked, %								-	-		-	-
Mov Cap-1 Maneuver	-	5	696	~ 6	5	~ 806	1186	-	-	1316	-	-
Mov Cap-2 Maneuver	-	5	-	~ 6	5	-	-	-	-	-	-	-
Stage 1	66	13	-	770	711	-	-	-	-	-	-	-
Stage 2	-	704	-	9	13	-	-	-	-	-	-	-

Approach	EB	WB	NB	SB
HCM Control Delay, s		$ 1020.9	0.2	9.3
HCM LOS	-	F		

Minor Lane/Major Mvmt	NBL	NBT	NBR	EBLn1	WBLn1	SBL	SBT	SBR
Capacity (veh/h)	1186	-	-	-	258	1316	-	-
HCM Lane V/C Ratio	0.004	-	-	-	3.182	0.674	-	-
HCM Control Delay (s)	8	0	-	$	1020.9	13.2	0	-
HCM Lane LOS	A	A	-	-	F	B	A	-
HCM 95th %tile Q(veh)	0	-	-	-	74.5	5.6	-	-

Notes

~: Volume exceeds capacity $: Delay exceeds 300s +: Computation Not Defined *: All major volume in platoon

Intersection	
Int Delay, s/veh	84.5

Movement	EBL	EBT	EBR	WBL	WBT	WBR	NBL	NBT	NBR	SBL	SBT	SBR
Lane Configurations												
Traffic Vol, veh/h	49	2	2	7	4	84	3	513	2	27	179	13
Future Vol, veh/h	49	2	2	7	4	84	3	513	2	27	179	13
Conflicting Peds, #/hr	0	0	0	0	0	0	0	0	0	0	0	0
Sign Control	Free	Free	Free	Free	Free	Free	Stop	Stop	Stop	Stop	Stop	Stop
RT Channelized	-	-	None	-	-	None	-	-	None	-	-	None
Storage Length	-	-	-	-	-	-	-	-	-	-	-	-
Veh in Median Storage, #	-	0	-	-	0	-	-	0	-	-	0	-
Grade, %	-	0	-	-	0	-	-	0	-	-	0	-
Peak Hour Factor	72	72	72	72	72	72	72	72	72	72	72	72
Heavy Vehicles, %	6	2	2	2	2	5	100	7	2	2	2	2
Mvmt Flow	68	3	3	10	6	117	4	713	3	38	249	18

Major/Minor	Major1			Major2			Minor1			Minor2		
Conflicting Flow All	123	0	0	6	0	0	359	284	5	584	227	65
Stage 1	-	-	-	-	-	-	141	141	-	85	85	-
Stage 2	-	-	-	-	-	-	218	143	-	499	142	-
Critical Hdwy	4.16	-	-	4.12	-	-	8.1	6.57	6.22	7.12	6.52	6.22
Critical Hdwy Stg 1	-	-	-	-	-	-	7.1	5.57	-	6.12	5.52	-
Critical Hdwy Stg 2	-	-	-	-	-	-	7.1	5.57	-	6.12	5.52	-
Follow-up Hdwy	2.254	-	-	2.218	-	-	4.4	4.063	3.318	3.518	4.018	3.318
Pot Cap-1 Maneuver	1440	-	-	1615	-	-	451	~ 617	1078	423	672	999
Stage 1	-	-	-	-	-	-	674	771	-	923	824	-
Stage 2	-	-	-	-	-	-	606	769	-	554	779	-
Platoon blocked, %		-	-		-	-						
Mov Cap-1 Maneuver	1440	-	-	1615	-	-	296	~ 584	1078	-	636	999
Mov Cap-2 Maneuver	-	-	-	-	-	-	296	~ 584	-	-	636	-
Stage 1	-	-	-	-	-	-	642	735	-	880	818	-
Stage 2	-	-	-	-	-	-	411	764	-	~ 16	742	-

Approach	EB	WB	NB	SB
HCM Control Delay, s	7	0.5	143.5	
HCM LOS			F	-

Minor Lane/Major Mvmt	NBLn1	EBL	EBT	EBR	WBL	WBT	WBR	SBLn1
Capacity (veh/h)	582	1440	-	-	1615	-	-	-
HCM Lane V/C Ratio	1.236	0.047	-	-	0.006	-	-	-
HCM Control Delay (s)	143.5	7.6	0	-	7.2	0	-	-
HCM Lane LOS	F	A	A	-	A	A	-	-
HCM 95th %tile Q(veh)	27.1	0.1	-	-	0	-	-	-

Notes

~: Volume exceeds capacity $: Delay exceeds 300s +: Computation Not Defined *: All major volume in platoon

Intersection	
Int Delay, s/veh	5.4

Movement	EBL	EBT	EBR	WBL	WBT	WBR	NBL	NBT	NBR	SBL	SBT	SBR
Lane Configurations												
Traffic Vol, veh/h	5	15	0	1	4	14	0	2	8	32	3	1
Future Vol, veh/h	5	15	0	1	4	14	0	2	8	32	3	1
Conflicting Peds, #/hr	0	0	0	0	0	0	1	0	0	0	0	1
Sign Control	Free	Free	Free	Free	Free	Free	Stop	Stop	Stop	Stop	Stop	Stop
RT Channelized	-	-	None	-	-	None	-	-	None	-	-	None
Storage Length	-	-	-	-	-	-	-	-	-	-	-	-
Veh in Median Storage, #	-	0	-	-	0	-	-	0	-	-	0	-
Grade, %	-	0	-	-	0	-	-	0	-	-	0	-
Peak Hour Factor	77	77	77	77	77	77	77	77	77	77	77	77
Heavy Vehicles, %	2	2	2	100	33	20	2	50	2	2	2	2
Mvmt Flow	6	19	0	1	5	18	0	3	10	42	4	1

Major/Minor	Major1			Major2			Minor1			Minor2		
Conflicting Flow All	23	0	0	19	0	0	51	56	19	54	47	15
Stage 1	-	-	-	-	-	-	31	31	-	16	16	-
Stage 2	-	-	-	-	-	-	20	25	-	38	31	-
Critical Hdwy	4.12	-	-	5.1	-	-	7.12	7	6.22	7.12	6.52	6.22
Critical Hdwy Stg 1	-	-	-	-	-	-	6.12	6	-	6.12	5.52	-
Critical Hdwy Stg 2	-	-	-	-	-	-	6.12	6	-	6.12	5.52	-
Follow-up Hdwy	2.218	-	-	3.1	-	-	3.518	4.45	3.318	3.518	4.018	3.318
Pot Cap-1 Maneuver	1592	-	-	1140	-	-	948	751	1059	944	845	1065
Stage 1	-	-	-	-	-	-	986	783	-	1004	882	-
Stage 2	-	-	-	-	-	-	999	788	-	977	869	-
Platoon blocked, %		-	-		-	-						
Mov Cap-1 Maneuver	1592	-	-	1140	-	-	939	747	1059	929	841	1064
Mov Cap-2 Maneuver	-	-	-	-	-	-	939	747	-	929	841	-
Stage 1	-	-	-	-	-	-	982	780	-	1000	881	-
Stage 2	-	-	-	-	-	-	991	787	-	960	866	-

Approach	EB	WB	NB	SB
HCM Control Delay, s	1.8	0.4	8.7	9.1
HCM LOS			A	A

Minor Lane/Major Mvmt	NBLn1	EBL	EBT	EBR	WBL	WBT	WBR	SBLn1
Capacity (veh/h)	977	1592	-	-	1140	-	-	924
HCM Lane V/C Ratio	0.013	0.004	-	-	0.001	-	-	0.051
HCM Control Delay (s)	8.7	7.3	0	-	8.2	0	-	9.1
HCM Lane LOS	A	A	A	-	A	A	-	A
HCM 95th %tile Q(veh)	0	0	-	-	0	-	-	0.2

Intersection	
Int Delay, s/veh	0.7

Movement	EBL	EBT	EBR	WBL	WBT	WBR	NBL	NBT	NBR	SBL	SBT	SBR
Lane Configurations												
Traffic Vol, veh/h	19	0	30	1	0	5	15	532	0	1	466	5
Future Vol, veh/h	19	0	30	1	0	5	15	532	0	1	466	5
Conflicting Peds, #/hr	0	0	0	0	0	0	0	0	0	0	0	0
Sign Control	Stop	Stop	Stop	Stop	Stop	Stop	Free	Free	Free	Free	Free	Free
RT Channelized	-	-	Stop	-	-	Stop	-	-	None	-	-	None
Storage Length	-	-	-	-	-	-	610	-	600	565	-	550
Veh in Median Storage, #	-	0	-	-	0	-	-	0	-	-	0	-
Grade, %	-	0	-	-	0	-	-	0	-	-	0	-
Peak Hour Factor	90	90	90	90	90	90	90	90	90	90	90	90
Heavy Vehicles, %	7	2	2	2	2	2	33	13	2	2	15	25
Mvmt Flow	21	0	33	1	0	6	17	591	0	1	518	6

Major/Minor	Minor2			Minor1			Major1			Major2		
Conflicting Flow All	850	1145	259	886	1151	296	524	0	0	591	0	0
Stage 1	520	520	-	625	625	-	-	-	-	-	-	-
Stage 2	330	625	-	261	526	-	-	-	-	-	-	-
Critical Hdwy	7.64	6.54	6.94	7.54	6.54	6.94	4.76	-	-	4.14	-	-
Critical Hdwy Stg 1	6.64	5.54	-	6.54	5.54	-	-	-	-	-	-	-
Critical Hdwy Stg 2	6.64	5.54	-	6.54	5.54	-	-	-	-	-	-	-
Follow-up Hdwy	3.57	4.02	3.32	3.52	4.02	3.32	2.53	-	-	2.22	-	-
Pot Cap-1 Maneuver	246	198	740	239	197	700	851	-	-	981	-	-
Stage 1	495	530	-	439	475	-	-	-	-	-	-	-
Stage 2	643	475	-	721	527	-	-	-	-	-	-	-
Platoon blocked, %								-	-		-	-
Mov Cap-1 Maneuver	240	194	740	225	193	700	851	-	-	981	-	-
Mov Cap-2 Maneuver	240	194	-	225	193	-	-	-	-	-	-	-
Stage 1	485	529	-	430	466	-	-	-	-	-	-	-
Stage 2	625	466	-	688	526	-	-	-	-	-	-	-

Approach	EB	WB	NB	SB
HCM Control Delay, s	11.4	9.3	0.3	0
HCM LOS	B	A		

Minor Lane/Major Mvmt	NBL	NBT	NBR	EBLn1	WBLn1	SBL	SBT	SBR
Capacity (veh/h)	851	-	-	619	840	981	-	-
HCM Lane V/C Ratio	0.02	-	-	0.088	0.008	0.001	-	-
HCM Control Delay (s)	9.3	-	-	11.4	9.3	8.7	-	-
HCM Lane LOS	A	-	-	B	A	A	-	-
HCM 95th %tile Q(veh)	0.1	-	-	0.3	0	0	-	-

Intersection	
Int Delay, s/veh	6.4

Movement	EBL	EBR	NBL	NBT	SBT	SBR
Lane Configurations						
Traffic Vol, veh/h	182	6	2	62	34	64
Future Vol, veh/h	182	6	2	62	34	64
Conflicting Peds, #/hr	0	0	0	0	0	0
Sign Control	Stop	Stop	Free	Free	Free	Free
RT Channelized	-	None	-	None	-	None
Storage Length	0	-	-	-	-	-
Veh in Median Storage, #	0	-	-	0	0	-
Grade, %	0	-	-	0	0	-
Peak Hour Factor	69	69	69	69	69	69
Heavy Vehicles, %	2	2	2	19	2	2
Mvmt Flow	264	9	3	90	49	93

Major/Minor	Minor2		Major1		Major2	
Conflicting Flow All	192	96	142	0	-	0
Stage 1	96	-	-	-	-	-
Stage 2	96	-	-	-	-	-
Critical Hdwy	6.42	6.22	4.12	-	-	-
Critical Hdwy Stg 1	5.42	-	-	-	-	-
Critical Hdwy Stg 2	5.42	-	-	-	-	-
Follow-up Hdwy	3.518	3.318	2.218	-	-	-
Pot Cap-1 Maneuver	797	960	1441	-	-	-
Stage 1	928	-	-	-	-	-
Stage 2	928	-	-	-	-	-
Platoon blocked, %				-	-	-
Mov Cap-1 Maneuver	795	960	1441	-	-	-
Mov Cap-2 Maneuver	795	-	-	-	-	-
Stage 1	926	-	-	-	-	-
Stage 2	928	-	-	-	-	-

Approach	EB	NB	SB
HCM Control Delay, s	11.8	0.2	0
HCM LOS	B		

Minor Lane/Major Mvmt	NBL	NBT	EBLn1	SBT	SBR
Capacity (veh/h)	1441	-	799	-	-
HCM Lane V/C Ratio	0.002	-	0.341	-	-
HCM Control Delay (s)	7.5	0	11.8	-	-
HCM Lane LOS	A	A	B	-	-
HCM 95th %tile Q(veh)	0	-	1.5	-	-

Intersection	
Int Delay, s/veh	3.7

Movement	EBL	EBR	NBL	NBT	SBT	SBR
Lane Configurations						
Traffic Vol, veh/h	38	6	2	26	27	13
Future Vol, veh/h	38	6	2	26	27	13
Conflicting Peds, #/hr	0	0	0	0	0	0
Sign Control	Stop	Stop	Free	Free	Free	Free
RT Channelized	-	None	-	None	-	None
Storage Length	0	-	-	-	-	-
Veh in Median Storage, #	0	-	-	0	0	-
Grade, %	0	-	-	0	0	-
Peak Hour Factor	69	69	69	69	69	69
Heavy Vehicles, %	2	2	2	16	2	2
Mvmt Flow	55	9	3	38	39	19

Major/Minor	Minor2		Major1		Major2	
Conflicting Flow All	93	49	58	0	-	0
Stage 1	49	-	-	-	-	-
Stage 2	44	-	-	-	-	-
Critical Hdwy	6.42	6.22	4.12	-	-	-
Critical Hdwy Stg 1	5.42	-	-	-	-	-
Critical Hdwy Stg 2	5.42	-	-	-	-	-
Follow-up Hdwy	3.518	3.318	2.218	-	-	-
Pot Cap-1 Maneuver	907	1020	1546	-	-	-
Stage 1	973	-	-	-	-	-
Stage 2	978	-	-	-	-	-
Platoon blocked, %				-	-	-
Mov Cap-1 Maneuver	905	1020	1546	-	-	-
Mov Cap-2 Maneuver	905	-	-	-	-	-
Stage 1	971	-	-	-	-	-
Stage 2	978	-	-	-	-	-

Approach	EB	NB	SB
HCM Control Delay, s	9.2	0.5	0
HCM LOS	A		

Minor Lane/Major Mvmt	NBL	NBT	EBLn1	SBT	SBR
Capacity (veh/h)	1546	-	919	-	-
HCM Lane V/C Ratio	0.002	-	0.069	-	-
HCM Control Delay (s)	7.3	0	9.2	-	-
HCM Lane LOS	A	A	A	-	-
HCM 95th %tile Q(veh)	0	-	0.2	-	-

MOVEMENT SUMMARY

Site: 1 [1. SR 124 / US Highway 12 Westbound Ramp (2033 PM With Both Projects (Site Folder: 2033-PM-With_Both_Projects)]

SR 124 / US Highway 12 Westbound Ramp
Site Category: (None)
Roundabout

Vehicle Movement Performance

Mov ID	Turn	INPUT VOLUMES [Total veh/h	HV] %	DEMAND FLOWS [Total veh/h	HV] %	Deg. Satn v/c	Aver. Delay sec	Level of Service	95% BACK OF QUEUE [Veh. veh	Dist] ft	Prop. Que	Effective Stop Rate	Aver. No. Cycles	Aver. Speed mph
South: SR 124														
3u	U	4	2.0	5	2.0	0.903	12.3	LOS D	0.0	0.0	0.00	0.63	0.00	33.9
3	L2	1049	6.0	1220	6.0	0.903	10.4	LOS D	0.0	0.0	0.00	0.63	0.00	33.3
8	T1	348	4.0	405	4.0	0.903	6.1	LOS D	0.0	0.0	0.00	0.63	0.00	33.5
Approach		1401	5.5	1629	5.5	0.903	9.3	LOS A	0.0	0.0	0.00	0.63	0.00	33.3
East: US Highway 12 Westbound Ramp														
1	L2	151	11.0	176	11.0	1.217	150.9	LOS F	14.8	401.5	1.00	2.05	5.32	10.2
16	R2	6	2.0	7	2.0	1.217	209.0	LOS F	14.8	401.5	1.00	2.05	5.32	10.2
Approach		157	10.7	183	10.7	1.217	153.1	LOS F	14.8	401.5	1.00	2.05	5.32	10.2
North: SR 124														
4	T1	90	11.0	105	11.0	0.364	33.7	LOS C	2.6	71.9	1.00	1.05	1.13	24.8
14	R2	602	3.0	700	3.0	1.455	250.0	LOS F	90.0	2303.7	1.00	3.63	8.26	7.0
Approach		692	4.0	805	4.0	1.455	221.8	LOS F	90.0	2303.7	1.00	3.29	7.34	7.8
All Vehicles		2250	5.4	2616	5.4	1.455	84.7	LOS F	90.0	2303.7	0.38	1.55	2.63	15.5

Site Level of Service (LOS) Method: Delay & Degree of Saturation (SIDRA). Site LOS Method is specified in the Parameter Settings dialog (Site tab).
Roundabout LOS Method: Same as Signalised Intersections.
Vehicle movement LOS values are based on average delay and v/c ratio (degree of saturation) per movement.
Intersection and Approach LOS values are based on average delay for all movements (v/c not used).
Roundabout Capacity Model: SIDRA Standard.
Delay Model: SIDRA Standard (Geometric Delay is included).
Queue Model: HCM Queue Formula.
Gap-Acceptance Capacity: SIDRA Standard (Akçelik M3D).
HV (%) values are calculated for All Movement Classes of All Heavy Vehicle Model Designation.

MOVEMENT SUMMARY

Site: 1 [2. SR 124 and 5th Avenue / Gateway Road and US Highway 12 Eastbound Ramp (2033 PM With Both Projects (Site Folder: 2033-PM-With_Both_Projects)]

SR 124 and 5th Avenue / Gateway Road and US Highway 12 Eastbound Ramp
Site Category: (None)
Roundabout

Vehicle Movement Performance

Mov ID	Turn	INPUT VOLUMES [Total veh/h	HV] %	DEMAND FLOWS [Total veh/h	HV] %	Deg. Satn v/c	Aver. Delay sec	Level of Service	95% BACK OF QUEUE [Veh. veh	Dist] ft	Prop. Que	Effective Stop Rate	Aver. No. Cycles	Aver. Speed mph
South: 5th Avenue														
3	L2	4	2.0	4	2.0	1.314	154.0	LOS F	119.4	3033.6	1.00	4.25	5.75	9.4
8	T1	952	2.0	1013	2.0	1.314	150.0	LOS F	119.4	3033.6	1.00	4.25	5.75	9.4
18	R2	219	2.0	233	2.0	1.314	150.5	LOS F	119.4	3033.6	1.00	4.25	5.75	9.3
Approach		1175	2.0	1250	2.0	1.314	150.1	LOS F	119.4	3033.6	1.00	4.25	5.75	9.4
East: US Highway 12 Westbound Ramp														
1	L2	943	2.0	1003	2.0	2.022	477.7	LOS F	196.6	5013.1	1.00	5.56	11.95	4.2
6	T1	102	7.0	109	7.0	2.022	473.6	LOS F	196.6	5013.1	1.00	5.56	11.95	4.2
16	R2	252	6.0	268	6.0	0.170	3.5	LOS A	0.0	0.0	0.00	0.48	0.00	32.6
Approach		1297	3.2	1380	3.2	2.022	385.2	LOS F	196.6	5013.1	0.81	4.57	9.63	5.0
North: SR 124														
7	L2	5	25.0	5	25.0	0.384	13.0	LOS B	2.2	58.7	0.71	0.77	0.71	33.5
4	T1	223	4.0	237	4.0	0.384	7.6	LOS A	2.2	58.7	0.71	0.77	0.71	34.4
14	R2	24	17.0	26	17.0	0.384	8.2	LOS A	2.2	58.7	0.71	0.77	0.71	33.3
Approach		252	5.7	268	5.7	0.384	7.8	LOS A	2.2	58.7	0.71	0.77	0.71	34.3
West: Gateway Road														
5	L2	183	4.0	195	4.0	0.442	12.0	LOS B	3.0	77.2	0.83	0.97	0.92	22.9
2	T1	45	2.0	48	2.0	0.442	7.9	LOS A	3.0	77.2	0.83	0.97	0.92	22.8
12	R2	11	2.0	12	2.0	0.442	8.4	LOS A	3.0	77.2	0.83	0.97	0.92	22.4
Approach		239	3.5	254	3.5	0.442	11.0	LOS B	3.0	77.2	0.83	0.97	0.92	22.8
All Vehicles		2963	2.9	3152	2.9	2.022	229.7	LOS F	196.6	5013.1	0.88	3.83	6.63	7.3

Site Level of Service (LOS) Method: Delay & Degree of Saturation (SIDRA). Site LOS Method is specified in the Parameter Settings dialog (Site tab).
Roundabout LOS Method: Same as Signalised Intersections.
Vehicle movement LOS values are based on average delay and v/c ratio (degree of saturation) per movement.
Intersection and Approach LOS values are based on average delay for all movements (v/c not used).
Roundabout Capacity Model: SIDRA Standard.
Delay Model: SIDRA Standard (Geometric Delay is included).
Queue Model: HCM Queue Formula.
Gap-Acceptance Capacity: SIDRA Standard (Akçelik M3D).
HV (%) values are calculated for All Movement Classes of All Heavy Vehicle Model Designation.

Intersection	
Int Delay, s/veh	6.8

Movement	EBL	EBT	EBR	WBL	WBT	WBR	NBL	NBT	NBR	SBL	SBT	SBR
Lane Configurations												
Traffic Vol, veh/h	43	3	3	28	1	973	2	156	16	976	189	19
Future Vol, veh/h	43	3	3	28	1	973	2	156	16	976	189	19
Conflicting Peds, #/hr	0	0	0	0	0	0	0	0	0	0	0	0
Sign Control	Stop	Stop	Stop	Stop	Stop	Stop	Free	Free	Free	Free	Free	Free
RT Channelized	-	-	None	-	-	None	-	-	None	-	-	None
Storage Length	-	-	-	-	-	-	-	-	-	-	-	-
Veh in Median Storage, #	-	0	-	-	0	-	-	0	-	-	0	-
Grade, %	-	0	-	-	0	-	-	0	-	-	0	-
Peak Hour Factor	89	89	89	89	89	89	89	89	89	89	89	89
Heavy Vehicles, %	2	2	2	2	2	3	2	2	2	2	3	2
Mvmt Flow	48	3	3	31	1	1093	2	175	18	1097	212	21

Major/Minor	Minor2			Minor1			Major1			Major2		
Conflicting Flow All	3152	2614	223	2608	2615	184	233	0	0	193	0	0
Stage 1	2417	2417	-	188	188	-	-	-	-	-	-	-
Stage 2	735	197	-	2420	2427	-	-	-	-	-	-	-
Critical Hdwy	7.12	6.52	6.22	7.12	6.52	6.23	4.12	-	-	4.12	-	-
Critical Hdwy Stg 1	6.12	5.52	-	6.12	5.52	-	-	-	-	-	-	-
Critical Hdwy Stg 2	6.12	5.52	-	6.12	5.52	-	-	-	-	-	-	-
Follow-up Hdwy	3.518	4.018	3.318	3.518	4.018	3.327	2.218	-	-	2.218	-	-
Pot Cap-1 Maneuver	~ 6	24	817	~ 16	24	~ 856	1335	-	-	1380	-	-
Stage 1	~ 44	64	-	814	745	-	-	-	-	-	-	-
Stage 2	411	738	-	44	63	-	-	-	-	-	-	-
Platoon blocked, %								-	-		-	-
Mov Cap-1 Maneuver	-	~ 2	817	-	2	~ 856	1335	-	-	1380	-	-
Mov Cap-2 Maneuver	-	~ 2	-	-	2	-	-	-	-	-	-	-
Stage 1	~ 44	5	-	812	744	-	-	-	-	-	-	-
Stage 2	-	737	-	~ 1	5	-	-	-	-	-	-	-

Approach	EB	WB	NB	SB
HCM Control Delay, s			0.1	13.8
HCM LOS	-	-		

Minor Lane/Major Mvmt	NBL	NBT	NBR	EBLn1	WBLn1	SBL	SBT	SBR
Capacity (veh/h)	1335	-	-	-	-	1380	-	-
HCM Lane V/C Ratio	0.002	-	-	-	-	0.795	-	-
HCM Control Delay (s)	7.7	0	-	-	-	16.8	0	-
HCM Lane LOS	A	A	-	-	-	C	A	-
HCM 95th %tile Q(veh)	0	-	-	-	-	9.2	-	-

Notes			
~: Volume exceeds capacity	$: Delay exceeds 300s	+: Computation Not Defined	*: All major volume in platoon

Intersection	
Int Delay, s/veh	66.9

Movement	EBL	EBT	EBR	WBL	WBT	WBR	NBL	NBT	NBR	SBL	SBT	SBR
Lane Configurations												
Traffic Vol, veh/h	14	4	9	12	5	35	3	333	4	67	589	28
Future Vol, veh/h	14	4	9	12	5	35	3	333	4	67	589	28
Conflicting Peds, #/hr	0	0	0	0	0	0	0	0	0	0	0	0
Sign Control	Free	Free	Free	Free	Free	Free	Stop	Stop	Stop	Stop	Stop	Stop
RT Channelized	-	-	None	-	-	None	-	-	None	-	-	None
Storage Length	-	-	-	-	-	-	-	-	-	-	-	-
Veh in Median Storage, #	-	0	-	-	0	-	-	0	-	-	0	-
Grade, %	-	0	-	-	0	-	-	0	-	-	0	-
Peak Hour Factor	85	85	85	85	85	85	85	85	85	85	85	85
Heavy Vehicles, %	2	2	2	14	2	2	2	2	2	2	2	2
Mvmt Flow	16	5	11	14	6	41	4	392	5	79	693	33

Major/Minor	Major1			Major2			Minor1			Minor2		
Conflicting Flow All	47	0	0	16	0	0	461	118	11	296	103	27
Stage 1	-	-	-	-	-	-	43	43	-	55	55	-
Stage 2	-	-	-	-	-	-	418	75	-	241	48	-
Critical Hdwy	4.12	-	-	4.24	-	-	7.12	6.52	6.22	7.12	6.52	6.22
Critical Hdwy Stg 1	-	-	-	-	-	-	6.12	5.52	-	6.12	5.52	-
Critical Hdwy Stg 2	-	-	-	-	-	-	6.12	5.52	-	6.12	5.52	-
Follow-up Hdwy	2.218	-	-	2.326	-	-	3.518	4.018	3.318	3.518	4.018	3.318
Pot Cap-1 Maneuver	1560	-	-	1527	-	-	511	772	1070	656	787	1048
Stage 1	-	-	-	-	-	-	971	859	-	957	849	-
Stage 2	-	-	-	-	-	-	612	833	-	762	855	-
Platoon blocked, %		-	-		-	-						
Mov Cap-1 Maneuver	1560	-	-	1527	-	-	110	757	1070	382	772	1048
Mov Cap-2 Maneuver	-	-	-	-	-	-	110	757	-	382	772	-
Stage 1	-	-	-	-	-	-	961	850	-	947	841	-
Stage 2	-	-	-	-	-	-	103	826	-	405	846	-

Approach	EB	WB	NB	SB
HCM Control Delay, s	3.8	1.7	16	99.7
HCM LOS			C	F

Minor Lane/Major Mvmt	NBLn1	EBL	EBT	EBR	WBL	WBT	WBR	SBLn1
Capacity (veh/h)	722	1560	-	-	1527	-	-	709
HCM Lane V/C Ratio	0.554	0.011	-	-	0.009	-	-	1.135
HCM Control Delay (s)	16	7.3	0	-	7.4	0	-	99.7
HCM Lane LOS	C	A	A	-	A	A	-	F
HCM 95th %tile Q(veh)	3.4	0	-	-	0	-	-	24.4

Intersection	
Int Delay, s/veh	3.4

Movement	EBL	EBT	EBR	WBL	WBT	WBR	NBL	NBT	NBR	SBL	SBT	SBR
Lane Configurations												
Traffic Vol, veh/h	1	11	0	14	26	45	0	2	3	26	5	1
Future Vol, veh/h	1	11	0	14	26	45	0	2	3	26	5	1
Conflicting Peds, #/hr	0	0	0	0	0	0	0	0	0	0	0	0
Sign Control	Free	Free	Free	Free	Free	Free	Stop	Stop	Stop	Stop	Stop	Stop
RT Channelized	-	-	None	-	-	None	-	-	None	-	-	None
Storage Length	-	-	-	-	-	-	-	-	-	-	-	-
Veh in Median Storage, #	-	0	-	-	0	-	-	0	-	-	0	-
Grade, %	-	0	-	-	0	-	-	0	-	-	0	-
Peak Hour Factor	86	86	86	86	86	86	86	86	86	86	86	86
Heavy Vehicles, %	2	11	2	2	5	2	2	2	2	2	2	2
Mvmt Flow	1	13	0	16	30	52	0	2	3	30	6	1

Major/Minor	Major1			Major2			Minor1			Minor2		
Conflicting Flow All	82	0	0	13	0	0	107	129	13	106	103	56
Stage 1	-	-	-	-	-	-	15	15	-	88	88	-
Stage 2	-	-	-	-	-	-	92	114	-	18	15	-
Critical Hdwy	4.12	-	-	4.12	-	-	7.12	6.52	6.22	7.12	6.52	6.22
Critical Hdwy Stg 1	-	-	-	-	-	-	6.12	5.52	-	6.12	5.52	-
Critical Hdwy Stg 2	-	-	-	-	-	-	6.12	5.52	-	6.12	5.52	-
Follow-up Hdwy	2.218	-	-	2.218	-	-	3.518	4.018	3.318	3.518	4.018	3.318
Pot Cap-1 Maneuver	1515	-	-	1606	-	-	872	762	1067	873	787	1011
Stage 1	-	-	-	-	-	-	1005	883	-	920	822	-
Stage 2	-	-	-	-	-	-	915	801	-	1001	883	-
Platoon blocked, %		-	-		-	-						
Mov Cap-1 Maneuver	1515	-	-	1606	-	-	858	753	1067	860	778	1011
Mov Cap-2 Maneuver	-	-	-	-	-	-	858	753	-	860	778	-
Stage 1	-	-	-	-	-	-	1004	882	-	919	813	-
Stage 2	-	-	-	-	-	-	897	792	-	994	882	-

Approach	EB	WB	NB	SB
HCM Control Delay, s	0.6	1.2	9	9.4
HCM LOS			A	A

Minor Lane/Major Mvmt	NBLn1	EBL	EBT	EBR	WBL	WBT	WBR	SBLn1
Capacity (veh/h)	914	1515	-	-	1606	-	-	850
HCM Lane V/C Ratio	0.006	0.001	-	-	0.01	-	-	0.044
HCM Control Delay (s)	9	7.4	0	-	7.3	0	-	9.4
HCM Lane LOS	A	A	A	-	A	A	-	A
HCM 95th %tile Q(veh)	0	0	-	-	0	-	-	0.1

Intersection	
Int Delay, s/veh	1.9

Movement	EBL	EBT	EBR	WBL	WBT	WBR	NBL	NBT	NBR	SBL	SBT	SBR
Lane Configurations												
Traffic Vol, veh/h	16	2	24	4	0	5	36	1260	1	7	634	42
Future Vol, veh/h	16	2	24	4	0	5	36	1260	1	7	634	42
Conflicting Peds, #/hr	0	0	0	0	0	0	0	0	0	0	0	0
Sign Control	Stop	Stop	Stop	Stop	Stop	Stop	Free	Free	Free	Free	Free	Free
RT Channelized	-	-	Stop	-	-	Stop	-	-	None	-	-	None
Storage Length	-	-	-	-	-	-	610	-	600	565	-	550
Veh in Median Storage, #	-	0	-	-	0	-	-	0	-	-	0	-
Grade, %	-	0	-	-	0	-	-	0	-	-	0	-
Peak Hour Factor	79	79	79	79	79	79	79	79	79	79	79	79
Heavy Vehicles, %	2	2	2	2	2	2	14	6	2	17	19	6
Mvmt Flow	20	3	30	5	0	6	46	1595	1	9	803	53

Major/Minor	Minor2			Minor1			Major1			Major2		
Conflicting Flow All	1711	2509	402	2108	2561	798	856	0	0	1596	0	0
Stage 1	821	821	-	1687	1687	-	-	-	-	-	-	-
Stage 2	890	1688	-	421	874	-	-	-	-	-	-	-
Critical Hdwy	7.54	6.54	6.94	7.54	6.54	6.94	4.38	-	-	4.44	-	-
Critical Hdwy Stg 1	6.54	5.54	-	6.54	5.54	-	-	-	-	-	-	-
Critical Hdwy Stg 2	6.54	5.54	-	6.54	5.54	-	-	-	-	-	-	-
Follow-up Hdwy	3.52	4.02	3.32	3.52	4.02	3.32	2.34	-	-	2.37	-	-
Pot Cap-1 Maneuver	59	28	598	29	26	329	708	-	-	343	-	-
Stage 1	335	387	-	97	148	-	-	-	-	-	-	-
Stage 2	304	148	-	581	365	-	-	-	-	-	-	-
Platoon blocked, %								-	-		-	-
Mov Cap-1 Maneuver	54	26	598	24	24	329	708	-	-	343	-	-
Mov Cap-2 Maneuver	54	26	-	24	24	-	-	-	-	-	-	-
Stage 1	313	377	-	91	138	-	-	-	-	-	-	-
Stage 2	279	138	-	533	356	-	-	-	-	-	-	-

Approach	EB	WB	NB	SB
HCM Control Delay, s	62.4	88.7	0.3	0.2
HCM LOS	F	F		

Minor Lane/Major Mvmt	NBL	NBT	NBR	EBLn1	WBLn1	SBL	SBT	SBR
Capacity (veh/h)	708	-	-	113	54	343	-	-
HCM Lane V/C Ratio	0.064	-	-	0.47	0.211	0.026	-	-
HCM Control Delay (s)	10.4	-	-	62.4	88.7	15.8	-	-
HCM Lane LOS	B	-	-	F	F	C	-	-
HCM 95th %tile Q(veh)	0.2	-	-	2.1	0.7	0.1	-	-

Intersection	
Int Delay, s/veh	3.9

Movement	EBL	EBR	NBL	NBT	SBT	SBR
Lane Configurations						
Traffic Vol, veh/h	127	4	8	53	67	217
Future Vol, veh/h	127	4	8	53	67	217
Conflicting Peds, #/hr	0	0	0	0	0	0
Sign Control	Stop	Stop	Free	Free	Free	Free
RT Channelized	-	None	-	None	-	None
Storage Length	0	-	-	-	-	-
Veh in Median Storage, #	0	-	-	0	0	-
Grade, %	0	-	-	0	0	-
Peak Hour Factor	64	64	64	64	64	64
Heavy Vehicles, %	2	2	2	2	2	2
Mvmt Flow	198	6	13	83	105	339

Major/Minor	Minor2		Major1		Major2	
Conflicting Flow All	384	275	444	0	-	0
Stage 1	275	-	-	-	-	-
Stage 2	109	-	-	-	-	-
Critical Hdwy	6.42	6.22	4.12	-	-	-
Critical Hdwy Stg 1	5.42	-	-	-	-	-
Critical Hdwy Stg 2	5.42	-	-	-	-	-
Follow-up Hdwy	3.518	3.318	2.218	-	-	-
Pot Cap-1 Maneuver	619	764	1116	-	-	-
Stage 1	771	-	-	-	-	-
Stage 2	916	-	-	-	-	-
Platoon blocked, %				-	-	-
Mov Cap-1 Maneuver	612	764	1116	-	-	-
Mov Cap-2 Maneuver	612	-	-	-	-	-
Stage 1	762	-	-	-	-	-
Stage 2	916	-	-	-	-	-

Approach	EB	NB	SB
HCM Control Delay, s	13.7	1.1	0
HCM LOS	B		

Minor Lane/Major Mvmt	NBL	NBT	EBLn1	SBT	SBR
Capacity (veh/h)	1116	-	616	-	-
HCM Lane V/C Ratio	0.011	-	0.332	-	-
HCM Control Delay (s)	8.3	0	13.7	-	-
HCM Lane LOS	A	A	B	-	-
HCM 95th %tile Q(veh)	0	-	1.5	-	-

Intersection	
Int Delay, s/veh	2.4

Movement	EBL	EBR	NBL	NBT	SBT	SBR
Lane Configurations						
Traffic Vol, veh/h	27	4	6	34	26	45
Future Vol, veh/h	27	4	6	34	26	45
Conflicting Peds, #/hr	0	0	0	0	0	0
Sign Control	Stop	Stop	Free	Free	Free	Free
RT Channelized	-	None	-	None	-	None
Storage Length	0	-	-	-	-	-
Veh in Median Storage, #	0	-	-	0	0	-
Grade, %	0	-	-	0	0	-
Peak Hour Factor	64	64	64	64	64	64
Heavy Vehicles, %	2	2	2	2	2	2
Mvmt Flow	42	6	9	53	41	70

Major/Minor	Minor2		Major1		Major2	
Conflicting Flow All	147	76	111	0	-	0
Stage 1	76	-	-	-	-	-
Stage 2	71	-	-	-	-	-
Critical Hdwy	6.42	6.22	4.12	-	-	-
Critical Hdwy Stg 1	5.42	-	-	-	-	-
Critical Hdwy Stg 2	5.42	-	-	-	-	-
Follow-up Hdwy	3.518	3.318	2.218	-	-	-
Pot Cap-1 Maneuver	845	985	1479	-	-	-
Stage 1	947	-	-	-	-	-
Stage 2	952	-	-	-	-	-
Platoon blocked, %				-	-	-
Mov Cap-1 Maneuver	840	985	1479	-	-	-
Mov Cap-2 Maneuver	840	-	-	-	-	-
Stage 1	941	-	-	-	-	-
Stage 2	952	-	-	-	-	-

Approach	EB	NB	SB
HCM Control Delay, s	9.5	1.1	0
HCM LOS	A		

Minor Lane/Major Mvmt	NBL	NBT	EBLn1	SBT	SBR
Capacity (veh/h)	1479	-	856	-	-
HCM Lane V/C Ratio	0.006	-	0.057	-	-
HCM Control Delay (s)	7.5	0	9.5	-	-
HCM Lane LOS	A	A	A	-	-
HCM 95th %tile Q(veh)	0	-	0.2	-	-

Appendix E

Intersection Mitigation Level of Service Calculations

SITE LAYOUT

Site: 1 [2. SR 124 and 5th Avenue / Gateway Road and US Highway 12 Eastbound Ramp (2033-PM-With_Both_Projects (Site Folder: 2033-PM-With_Both_Projects - Mitigation)]

SR 124 and 5th Avenue / Gateway Road and US Highway 12 Eastbound Ramp
Site Category: (None)
Roundabout

Layout pictures are schematic functional drawings reflecting input data. They are not design drawings.

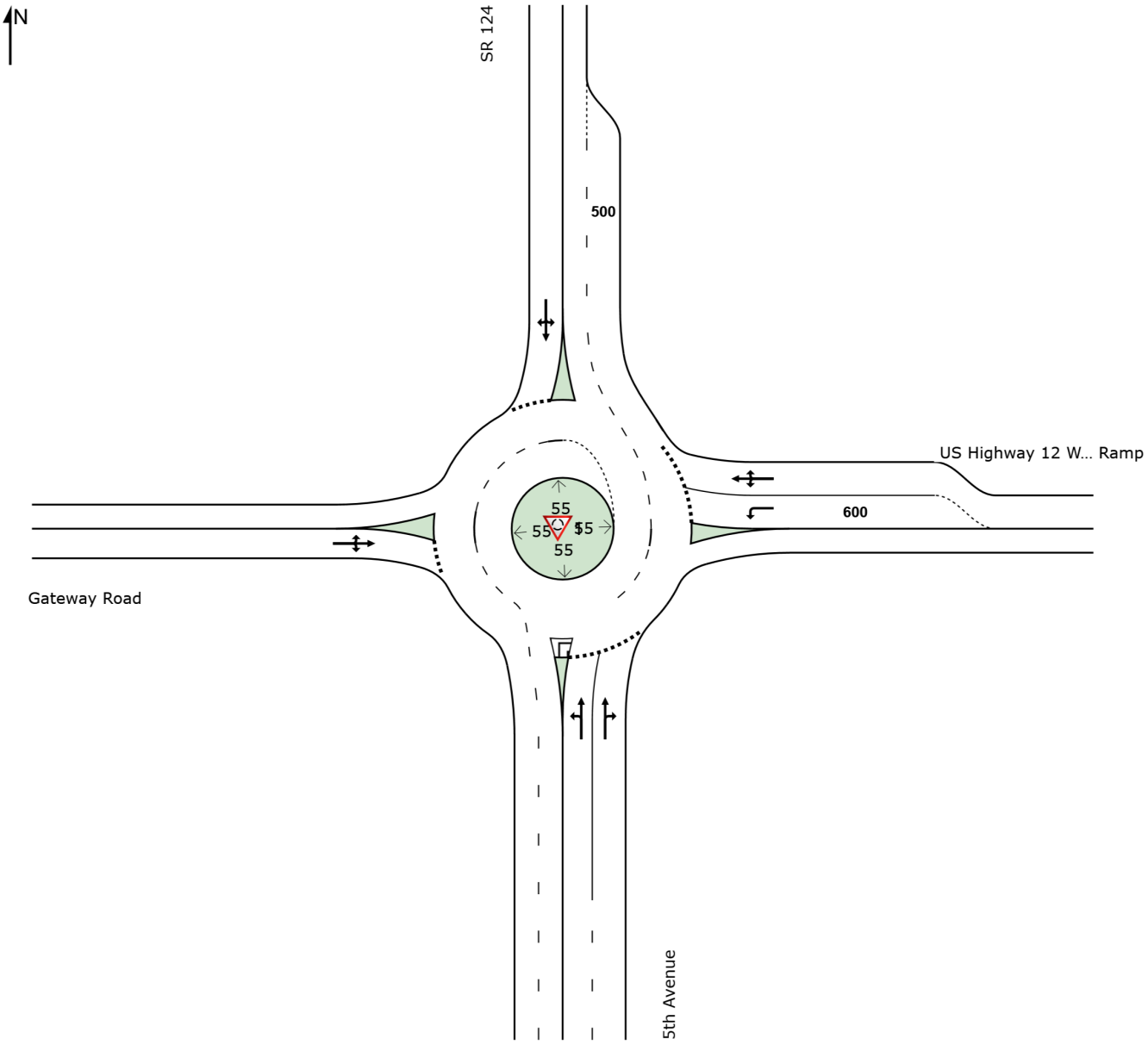

SITE LAYOUT

Site: 1 [1. SR 124 / US Highway 12 Westbound Ramp (2033-PM-With_Both_Projects - Mitigation) (Site Folder: 2033-PM-With_Both_Projects - Mitigation)]

SR 124 / US Highway 12 Westbound Ramp
Site Category: (None)
Roundabout

Layout pictures are schematic functional drawings reflecting input data. They are not design drawings.

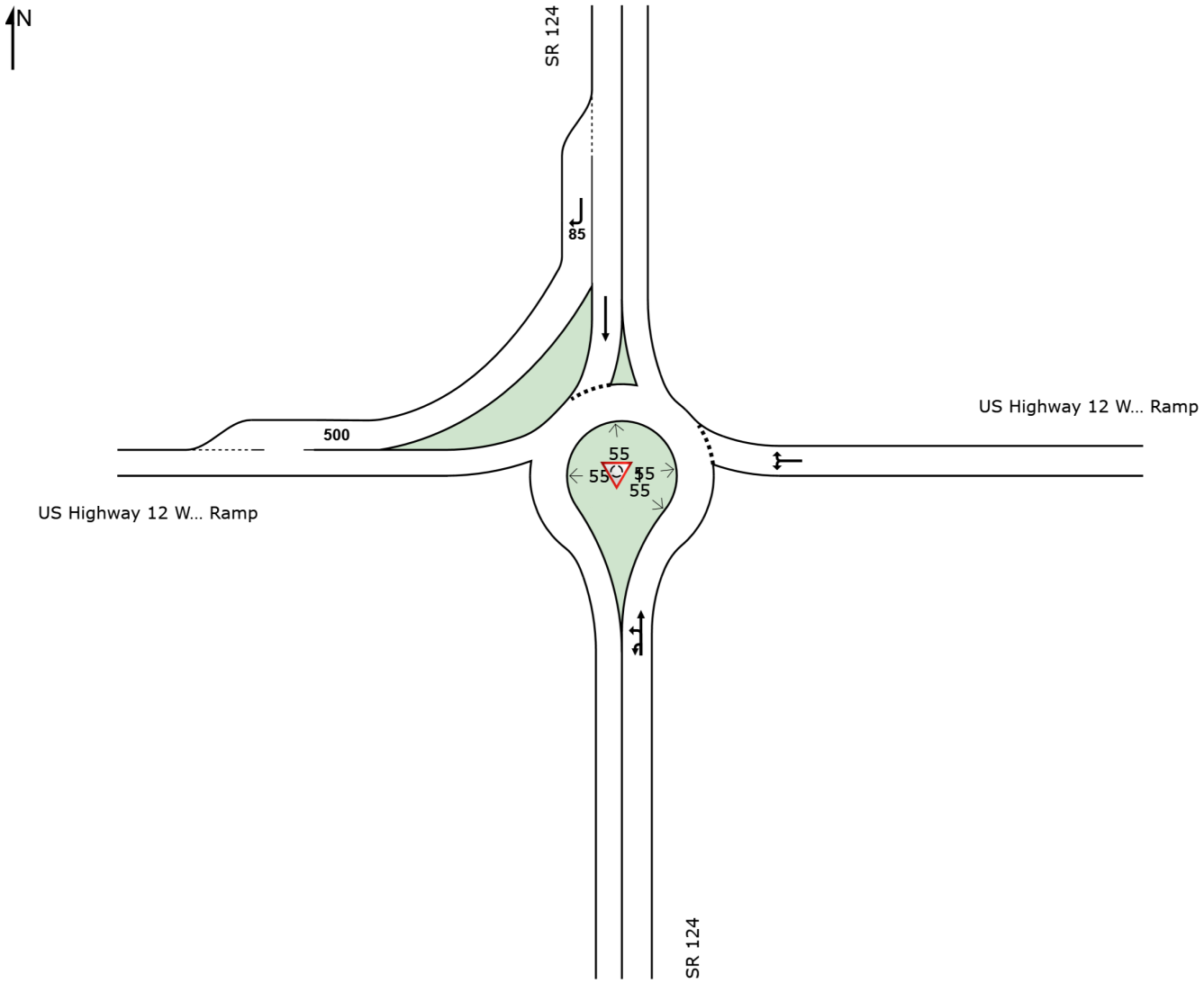

5th St
W Highway 12
12
5th Avenue
Jantz Road
Jantz Road
5th Avenue
Poplar Ave
Walnut St
Maple St
Cherry St
5th St

12
W Highway 12
Jantz Road
Humorist Road
Ray Boulevard
Apple Ln
Harrison Rd
Sage Rd
Piper Rd
Ray Blvd

Hanson Loop Road
US Highway 12
Hanson Loop Road
Quincy Road

MOVEMENT SUMMARY

Site: 1 [1. SR 124 / US Highway 12 Westbound Ramp (2033-AM-With_Both_Projects - Mitigation) (Site Folder: 2033-AM-With_Both_Projects - Mitigation)]

SR 124 / US Highway 12 Westbound Ramp
Site Category: (None)
Roundabout

Vehicle Movement Performance

Mov ID	Turn	INPUT VOLUMES [Total veh/h	HV] %	DEMAND FLOWS [Total veh/h	HV] %	Deg. Satn v/c	Aver. Delay sec	Level of Service	95% BACK OF QUEUE [Veh. veh	Dist] ft	Prop. Que	Effective Stop Rate	Aver. No. Cycles	Aver. Speed mph
South: SR 124														
3u	U	1	2.0	1	2.0	0.713	11.3	LOS B	0.0	0.0	0.00	0.64	0.00	34.8
3	L2	790	9.0	952	9.0	0.713	9.4	LOS A	0.0	0.0	0.00	0.64	0.00	34.1
8	T1	245	8.0	295	8.0	0.713	5.1	LOS A	0.0	0.0	0.00	0.64	0.00	34.3
Approach		1036	8.8	1248	8.8	0.713	8.4	LOS A	0.0	0.0	0.00	0.64	0.00	34.1
East: US Highway 12 Westbound Ramp														
1	L2	187	9.0	225	9.0	0.654	50.4	LOS D	7.1	191.7	1.00	1.37	1.94	19.7
16	R2	7	17.0	8	17.0	0.654	47.8	LOS D	7.1	191.7	1.00	1.37	1.94	19.5
Approach		194	9.3	234	9.3	0.654	50.3	LOS D	7.1	191.7	1.00	1.37	1.94	19.7
North: SR 124														
4	T1	131	6.0	158	6.0	0.312	18.4	LOS B	2.4	62.5	0.98	0.95	0.98	29.9
14	R2	169	5.0	204	5.0	0.128	8.4	LOS A	0.0	0.0	0.00	0.52	0.00	36.1
Approach		300	5.4	361	5.4	0.312	12.7	LOS B	2.4	62.5	0.43	0.71	0.43	33.1
All Vehicles		1530	8.2	1843	8.2	0.713	14.6	LOS B	7.1	191.7	0.21	0.75	0.33	31.0

Site Level of Service (LOS) Method: Delay & Degree of Saturation (SIDRA). Site LOS Method is specified in the Parameter Settings dialog (Site tab).
Roundabout LOS Method: Same as Signalised Intersections.
Vehicle movement LOS values are based on average delay and v/c ratio (degree of saturation) per movement.
Intersection and Approach LOS values are based on average delay for all movements (v/c not used).
Roundabout Capacity Model: SIDRA Standard.
Delay Model: SIDRA Standard (Geometric Delay is included).
Queue Model: HCM Queue Formula.
Gap-Acceptance Capacity: SIDRA Standard (Akçelik M3D).
HV (%) values are calculated for All Movement Classes of All Heavy Vehicle Model Designation.

MOVEMENT SUMMARY

Site: 1 [2. SR 124 and 5th Avenue / Gateway Road and US Highway 12 Eastbound Ramp (2033-AM-With_Both_Projects (Site Folder: 2033-AM-With_Both_Projects - Mitigation - 1% Growth)]

SR 124 and 5th Avenue / Gateway Road and US Highway 12 Eastbound Ramp
Site Category: (None)
Roundabout

Vehicle Movement Performance

Mov ID	Turn	INPUT VOLUMES [Total veh/h	HV] %	DEMAND FLOWS [Total veh/h	HV] %	Deg. Satn v/c	Aver. Delay sec	Level of Service	95% BACK OF QUEUE [Veh. veh	Dist] ft	Prop. Que	Effective Stop Rate	Aver. No. Cycles	Aver. Speed mph
South: 5th Avenue														
3	L2	12	2.0	12	2.0	0.333	6.0	LOS A	1.9	48.6	0.32	0.30	0.32	24.8
8	T1	731	3.0	731	3.0	0.333	2.8	LOS A	1.9	48.6	0.33	0.32	0.33	24.7
18	R2	57	33.0	57	33.0	0.291	4.6	LOS A	1.5	40.6	0.33	0.35	0.33	25.0
Approach		800	5.1	800	5.1	0.333	3.0	LOS A	1.9	48.6	0.33	0.32	0.33	24.7
East: US Highway 12 Westbound Ramp														
1	L2	736	2.0	736	2.0	0.594	11.9	LOS B	3.5	90.7	0.67	0.95	0.85	29.9
6	T1	170	2.0	170	2.0	0.594	7.5	LOS A	3.5	90.7	0.67	0.92	0.84	30.7
16	R2	161	10.0	161	10.0	0.594	10.3	LOS B	3.5	90.7	0.67	0.92	0.84	29.8
Approach		1067	3.2	1067	3.2	0.594	11.0	LOS B	3.5	90.7	0.67	0.94	0.84	30.0
North: SR 124														
7	L2	8	2.0	8	2.0	0.506	12.6	LOS B	2.4	67.4	0.69	0.88	0.82	34.0
4	T1	251	7.0	251	7.0	0.506	8.6	LOS A	2.4	67.4	0.69	0.88	0.82	34.1
14	R2	48	50.0	48	50.0	0.506	11.8	LOS B	2.4	67.4	0.69	0.88	0.82	31.9
Approach		307	13.6	307	13.6	0.506	9.2	LOS A	2.4	67.4	0.69	0.88	0.82	33.7
West: Gateway Road														
5	L2	93	20.0	93	20.0	0.241	9.9	LOS A	0.9	28.3	0.65	0.83	0.65	23.2
2	T1	12	100.0	12	100.0	0.241	11.7	LOS B	0.9	28.3	0.65	0.83	0.65	23.0
12	R2	8	17.0	8	17.0	0.241	6.2	LOS A	0.9	28.3	0.65	0.83	0.65	22.7
Approach		113	28.3	113	28.3	0.241	9.8	LOS A	0.9	28.3	0.65	0.83	0.65	23.1
All Vehicles		2287	6.5	2287	6.5	0.594	7.9	LOS A	3.5	90.7	0.55	0.71	0.65	27.9

Site Level of Service (LOS) Method: Delay & Degree of Saturation (SIDRA). Site LOS Method is specified in the Parameter Settings dialog (Site tab).
Roundabout LOS Method: Same as Signalised Intersections.
Vehicle movement LOS values are based on average delay and v/c ratio (degree of saturation) per movement.
Intersection and Approach LOS values are based on average delay for all movements (v/c not used).
Roundabout Capacity Model: SIDRA Standard.
Delay Model: SIDRA Standard (Geometric Delay is included).
Queue Model: HCM Queue Formula.
Gap-Acceptance Capacity: SIDRA Standard (Akçelik M3D).
HV (%) values are calculated for All Movement Classes of All Heavy Vehicle Model Designation.

HCM 6th Signalized Intersection Summary
3: 5th Avenue & Jantz Road

07/18/2022

Movement	EBL	EBT	EBR	WBL	WBT	WBR	NBL	NBT	NBR	SBL	SBT	SBR
Lane Configurations												
Traffic Volume (veh/h)	8	1	1	7	3	665	4	169	16	720	260	41
Future Volume (veh/h)	8	1	1	7	3	665	4	169	16	720	260	41
Initial Q (Qb), veh	0	0	0	0	0	0	0	0	0	0	0	0
Ped-Bike Adj(A_pbT)	1.00		1.00	1.00		1.00	1.00		1.00	1.00		1.00
Parking Bus, Adj	1.00	1.00	1.00	1.00	1.00	1.00	1.00	1.00	1.00	1.00	1.00	1.00
Work Zone On Approach		No			No			No			No	
Adj Sat Flow, veh/h/ln	1870	1870	1870	1870	1870	1781	1870	1870	1870	1811	1870	1870
Adj Flow Rate, veh/h	9	1	1	8	3	0	4	184	17	783	283	45
Peak Hour Factor	0.92	0.92	0.92	0.92	0.92	0.92	0.92	0.92	0.92	0.92	0.92	0.92
Percent Heavy Veh, %	2	2	2	2	2	8	2	2	2	6	2	2
Cap, veh/h	200	4	4	189	12		95	293	27	786	1173	187
Arrive On Green	0.03	0.03	0.03	0.03	0.03	0.00	0.18	0.18	0.18	0.46	0.75	0.75
Sat Flow, veh/h	1255	140	139	1149	431	1510	14	1666	152	1725	1575	250
Grp Volume(v), veh/h	11	0	0	11	0	0	205	0	0	783	0	328
Grp Sat Flow(s),veh/h/ln	1534	0	0	1580	0	1510	1832	0	0	1725	0	1825
Q Serve(g_s), s	0.0	0.0	0.0	0.0	0.0	0.0	0.0	0.0	0.0	17.9	0.0	2.2
Cycle Q Clear(g_c), s	0.2	0.0	0.0	0.2	0.0	0.0	4.1	0.0	0.0	17.9	0.0	2.2
Prop In Lane	0.82		0.09	0.73		1.00	0.02		0.08	1.00		0.14
Lane Grp Cap(c), veh/h	207	0	0	200	0		415	0	0	786	0	1360
V/C Ratio(X)	0.05	0.00	0.00	0.05	0.00		0.49	0.00	0.00	1.00	0.00	0.24
Avail Cap(c_a), veh/h	925	0	0	945	0		923	0	0	786	0	1870
HCM Platoon Ratio	1.00	1.00	1.00	1.00	1.00	1.00	1.00	1.00	1.00	1.00	1.00	1.00
Upstream Filter(I)	1.00	0.00	0.00	1.00	0.00	0.00	1.00	0.00	0.00	1.00	0.00	1.00
Uniform Delay (d), s/veh	18.8	0.0	0.0	18.8	0.0	0.0	15.1	0.0	0.0	10.7	0.0	1.6
Incr Delay (d2), s/veh	0.1	0.0	0.0	0.1	0.0	0.0	0.9	0.0	0.0	31.2	0.0	0.1
Initial Q Delay(d3),s/veh	0.0	0.0	0.0	0.0	0.0	0.0	0.0	0.0	0.0	0.0	0.0	0.0
%ile BackOfQ(50%),veh/ln	0.1	0.0	0.0	0.1	0.0	0.0	1.6	0.0	0.0	11.6	0.0	0.1
Unsig. Movement Delay, s/veh												
LnGrp Delay(d),s/veh	18.9	0.0	0.0	18.9	0.0	0.0	16.0	0.0	0.0	42.0	0.0	1.7
LnGrp LOS	B	A	A	B	A		B	A	A	D	A	A
Approach Vol, veh/h		11			11			205			1111	
Approach Delay, s/veh		18.9			18.9			16.0			30.1	
Approach LOS		B			B			B			C	

Timer - Assigned Phs	1	2		4		6		8
Phs Duration (G+Y+Rc), s	22.5	11.4		5.6		33.9		5.6
Change Period (Y+Rc), s	4.5	4.5		4.5		4.5		4.5
Max Green Setting (Gmax), s	18.0	18.0		20.5		40.5		20.5
Max Q Clear Time (g_c+I1), s	19.9	6.1		2.2		4.2		2.2
Green Ext Time (p_c), s	0.0	0.9		0.0		2.3		0.0

Intersection Summary	
HCM 6th Ctrl Delay	27.7
HCM 6th LOS	C

Notes

Unsignalized Delay for [WBR] is excluded from calculations of the approach delay and intersection delay.

Intersection	
Int Delay, s/veh	3.6

Movement	EBL	EBT	EBR	WBL	WBT	WBR	NBL	NBT	NBR	SBL	SBT	SBR
Lane Configurations												
Traffic Vol, veh/h	49	2	2	7	4	84	3	523	2	27	183	13
Future Vol, veh/h	49	2	2	7	4	84	3	523	2	27	183	13
Conflicting Peds, #/hr	0	0	0	0	0	0	0	0	0	0	0	0
Sign Control	Stop	Stop	Stop	Stop	Stop	Stop	Free	Free	Free	Free	Free	Free
RT Channelized	-	-	None	-	-	None	-	-	None	-	-	None
Storage Length	-	-	-	-	-	-	-	-	-	-	-	-
Veh in Median Storage, #	-	0	-	-	0	-	-	0	-	-	0	-
Grade, %	-	0	-	-	0	-	-	0	-	-	0	-
Peak Hour Factor	92	92	92	92	92	92	92	92	92	92	92	92
Heavy Vehicles, %	6	2	2	2	2	5	100	7	2	2	2	2
Mvmt Flow	53	2	2	8	4	91	3	568	2	29	199	14

Major/Minor	Minor2			Minor1			Major1			Major2		
Conflicting Flow All	887	840	206	841	846	569	213	0	0	570	0	0
Stage 1	264	264	-	575	575	-	-	-	-	-	-	-
Stage 2	623	576	-	266	271	-	-	-	-	-	-	-
Critical Hdwy	7.16	6.52	6.22	7.12	6.52	6.25	5.1	-	-	4.12	-	-
Critical Hdwy Stg 1	6.16	5.52	-	6.12	5.52	-	-	-	-	-	-	-
Critical Hdwy Stg 2	6.16	5.52	-	6.12	5.52	-	-	-	-	-	-	-
Follow-up Hdwy	3.554	4.018	3.318	3.518	4.018	3.345	3.1	-	-	2.218	-	-
Pot Cap-1 Maneuver	260	302	835	284	299	516	940	-	-	1002	-	-
Stage 1	732	690	-	503	503	-	-	-	-	-	-	-
Stage 2	467	502	-	739	685	-	-	-	-	-	-	-
Platoon blocked, %								-	-		-	-
Mov Cap-1 Maneuver	205	291	835	273	288	516	940	-	-	1002	-	-
Mov Cap-2 Maneuver	205	291	-	273	288	-	-	-	-	-	-	-
Stage 1	728	667	-	500	500	-	-	-	-	-	-	-
Stage 2	379	499	-	710	662	-	-	-	-	-	-	-

Approach	EB	WB	NB	SB
HCM Control Delay, s	28.1	14.8	0.1	1.1
HCM LOS	D	B		

Minor Lane/Major Mvmt	NBL	NBT	NBR	EBLn1	WBLn1	SBL	SBT	SBR
Capacity (veh/h)	940	-	-	213	470	1002	-	-
HCM Lane V/C Ratio	0.003	-	-	0.27	0.22	0.029	-	-
HCM Control Delay (s)	8.8	0	-	28.1	14.8	8.7	0	-
HCM Lane LOS	A	A	-	D	B	A	A	-
HCM 95th %tile Q(veh)	0	-	-	1.1	0.8	0.1	-	-

Intersection	
Int Delay, s/veh	0.7

Movement	EBL	EBT	EBR	WBL	WBT	WBR	NBL	NBT	NBR	SBL	SBT	SBR
Lane Configurations												
Traffic Vol, veh/h	19	0	30	1	0	5	15	532	0	6	466	5
Future Vol, veh/h	19	0	30	1	0	5	15	532	0	6	466	5
Conflicting Peds, #/hr	0	0	0	0	0	0	0	0	0	0	0	0
Sign Control	Stop	Stop	Stop	Stop	Stop	Stop	Free	Free	Free	Free	Free	Free
RT Channelized	-	-	Free	-	-	Stop	-	-	None	-	-	None
Storage Length	-	-	50	-	-	-	610	-	600	565	-	550
Veh in Median Storage, #	-	0	-	-	0	-	-	0	-	-	0	-
Grade, %	-	0	-	-	0	-	-	0	-	-	0	-
Peak Hour Factor	90	90	90	90	90	90	90	90	90	90	90	90
Heavy Vehicles, %	7	2	2	2	2	2	33	13	2	2	15	25
Mvmt Flow	21	0	33	1	0	6	17	591	0	7	518	6

Major/Minor	Minor2			Minor1			Major1			Major2		
Conflicting Flow All	862	1157	-	898	1163	296	524	0	0	591	0	0
Stage 1	532	532	-	625	625	-	-	-	-	-	-	-
Stage 2	330	625	-	273	538	-	-	-	-	-	-	-
Critical Hdwy	7.64	6.54	-	7.54	6.54	6.94	4.76	-	-	4.14	-	-
Critical Hdwy Stg 1	6.64	5.54	-	6.54	5.54	-	-	-	-	-	-	-
Critical Hdwy Stg 2	6.64	5.54	-	6.54	5.54	-	-	-	-	-	-	-
Follow-up Hdwy	3.57	4.02	-	3.52	4.02	3.32	2.53	-	-	2.22	-	-
Pot Cap-1 Maneuver	241	195	0	234	193	700	851	-	-	981	-	-
Stage 1	486	524	0	439	475	-	-	-	-	-	-	-
Stage 2	643	475	0	710	521	-	-	-	-	-	-	-
Platoon blocked, %								-	-		-	-
Mov Cap-1 Maneuver	234	190	-	229	188	700	851	-	-	981	-	-
Mov Cap-2 Maneuver	234	190	-	229	188	-	-	-	-	-	-	-
Stage 1	476	520	-	430	466	-	-	-	-	-	-	-
Stage 2	625	466	-	705	517	-	-	-	-	-	-	-

Approach	EB	WB	NB	SB
HCM Control Delay, s	21.9	9.3	0.3	0.1
HCM LOS	C	A		

Minor Lane/Major Mvmt	NBL	NBT	NBR	EBLn1	EBLn2	WBLn1	SBL	SBT	SBR
Capacity (veh/h)	851	-	-	234	-	840	981	-	-
HCM Lane V/C Ratio	0.02	-	-	0.09	-	0.008	0.007	-	-
HCM Control Delay (s)	9.3	-	-	21.9	0	9.3	8.7	-	-
HCM Lane LOS	A	-	-	C	A	A	A	-	-
HCM 95th %tile Q(veh)	0.1	-	-	0.3	-	0	0	-	-

MOVEMENT SUMMARY

Site: 1 [1. SR 124 / US Highway 12 Westbound Ramp (2033-PM-With_Both_Projects - Mitigation) (Site Folder: 2033-PM-With_Both_Projects - Mitigation)]

SR 124 / US Highway 12 Westbound Ramp
Site Category: (None)
Roundabout

Vehicle Movement Performance

Mov ID	Turn	INPUT VOLUMES [Total veh/h	HV] %	DEMAND FLOWS [Total veh/h	HV] %	Deg. Satn v/c	Aver. Delay sec	Level of Service	95% BACK OF QUEUE [Veh. veh	Dist] ft	Prop. Que	Effective Stop Rate	Aver. No. Cycles	Aver. Speed mph
South: SR 124														
3u	U	4	2.0	4	2.0	0.781	11.5	LOS B	0.0	0.0	0.00	0.64	0.00	34.7
3	L2	1055	6.0	1055	6.0	0.781	9.6	LOS A	0.0	0.0	0.00	0.64	0.00	34.0
8	T1	349	4.0	349	4.0	0.781	5.3	LOS A	0.0	0.0	0.00	0.64	0.00	34.3
Approach		1408	5.5	1408	5.5	0.781	8.5	LOS A	0.0	0.0	0.00	0.64	0.00	34.1
East: US Highway 12 Westbound Ramp														
1	L2	151	11.0	151	11.0	0.614	62.9	LOS E	5.5	150.0	1.00	1.33	1.88	17.8
16	R2	6	2.0	6	2.0	0.614	56.2	LOS E	5.5	150.0	1.00	1.33	1.88	17.7
Approach		157	10.7	157	10.7	0.614	62.6	LOS E	5.5	150.0	1.00	1.33	1.88	17.8
North: SR 124														
4	T1	90	11.0	90	11.0	0.185	18.5	LOS B	1.3	35.9	0.94	0.90	0.94	29.8
14	R2	602	3.0	602	3.0	0.370	24.2	LOS C	0.0	0.0	0.00	0.52	0.00	36.1
Approach		692	4.0	692	4.0	0.370	23.5	LOS C	1.3	35.9	0.12	0.57	0.12	35.1
All Vehicles		2257	5.4	2257	5.4	0.781	16.9	LOS B	5.5	150.0	0.11	0.67	0.17	32.3

Site Level of Service (LOS) Method: Delay & Degree of Saturation (SIDRA). Site LOS Method is specified in the Parameter Settings dialog (Site tab).
Roundabout LOS Method: Same as Signalised Intersections.
Vehicle movement LOS values are based on average delay and v/c ratio (degree of saturation) per movement.
Intersection and Approach LOS values are based on average delay for all movements (v/c not used).
Roundabout Capacity Model: SIDRA Standard.
Delay Model: SIDRA Standard (Geometric Delay is included).
Queue Model: HCM Queue Formula.
Gap-Acceptance Capacity: SIDRA Standard (Akçelik M3D).
HV (%) values are calculated for All Movement Classes of All Heavy Vehicle Model Designation.

MOVEMENT SUMMARY

Site: 1 [2. SR 124 and 5th Avenue / Gateway Road and US Highway 12 Eastbound Ramp (2033-PM-With_Both_Projects (Site Folder: 2033-PM-With_Both_Projects - Mitigation - 1% Growth)]

SR 124 and 5th Avenue / Gateway Road and US Highway 12 Eastbound Ramp
Site Category: (None)
Roundabout

Vehicle Movement Performance

Mov ID	Turn	INPUT VOLUMES [Total veh/h	HV] %	DEMAND FLOWS [Total veh/h	HV] %	Deg. Satn v/c	Aver. Delay sec	Level of Service	95% BACK OF QUEUE [Veh. veh	Dist] ft	Prop. Que	Effective Stop Rate	Aver. No. Cycles	Aver. Speed mph
South: 5th Avenue														
3	L2	4	2.0	4	2.0	0.500	6.5	LOS A	3.6	90.7	0.51	0.37	0.51	24.5
8	T1	943	2.0	943	2.0	0.500	3.9	LOS A	3.6	90.7	0.50	0.40	0.50	24.4
18	R2	216	2.0	216	2.0	0.438	3.7	LOS A	2.8	70.9	0.49	0.46	0.49	24.0
Approach		1163	2.0	1163	2.0	0.500	3.9	LOS A	3.6	90.7	0.50	0.41	0.50	24.3
East: US Highway 12 Westbound Ramp														
1	L2	930	2.0	930	2.0	0.880	22.5	LOS D	10.6	272.8	0.93	1.33	1.89	26.3
6	T1	96	7.0	96	7.0	0.880	17.9	LOS D	10.6	272.8	0.94	1.33	1.88	26.8
16	R2	226	6.0	226	6.0	0.880	22.7	LOS D	10.6	272.8	0.94	1.33	1.88	26.2
Approach		1252	3.1	1252	3.1	0.880	22.2	LOS C	10.6	272.8	0.94	1.33	1.89	26.3
North: SR 124														
7	L2	4	25.0	4	25.0	0.432	14.1	LOS B	2.1	55.1	0.73	0.87	0.82	33.4
4	T1	218	4.0	218	4.0	0.432	8.4	LOS A	2.1	55.1	0.73	0.87	0.82	34.4
14	R2	24	17.0	24	17.0	0.432	9.1	LOS A	2.1	55.1	0.73	0.87	0.82	33.2
Approach		246	5.6	246	5.6	0.432	8.5	LOS A	2.1	55.1	0.73	0.87	0.82	34.2
West: Gateway Road														
5	L2	178	4.0	178	4.0	0.441	10.7	LOS B	2.3	59.8	0.78	0.95	0.89	23.2
2	T1	45	2.0	45	2.0	0.441	6.6	LOS A	2.3	59.8	0.78	0.95	0.89	23.1
12	R2	11	2.0	11	2.0	0.441	7.0	LOS A	2.3	59.8	0.78	0.95	0.89	22.7
Approach		234	3.5	234	3.5	0.441	9.7	LOS A	2.3	59.8	0.78	0.95	0.89	23.1
All Vehicles		2895	2.9	2895	2.9	0.880	12.7	LOS B	10.6	272.8	0.73	0.89	1.16	25.7

Site Level of Service (LOS) Method: Delay & Degree of Saturation (SIDRA). Site LOS Method is specified in the Parameter Settings dialog (Site tab).
Roundabout LOS Method: Same as Signalised Intersections.
Vehicle movement LOS values are based on average delay and v/c ratio (degree of saturation) per movement.
Intersection and Approach LOS values are based on average delay for all movements (v/c not used).
Roundabout Capacity Model: SIDRA Standard.
Delay Model: SIDRA Standard (Geometric Delay is included).
Queue Model: HCM Queue Formula.
Gap-Acceptance Capacity: SIDRA Standard (Akçelik M3D).
HV (%) values are calculated for All Movement Classes of All Heavy Vehicle Model Designation.

HCM 6th Signalized Intersection Summary
3: 5th Avenue & Jantz Road

07/18/2022

Movement	EBL	EBT	EBR	WBL	WBT	WBR	NBL	NBT	NBR	SBL	SBT	SBR
Lane Configurations												
Traffic Volume (veh/h)	43	3	3	28	1	980	2	156	16	988	189	19
Future Volume (veh/h)	43	3	3	28	1	980	2	156	16	988	189	19
Initial Q (Qb), veh	0	0	0	0	0	0	0	0	0	0	0	0
Ped-Bike Adj(A_pbT)	1.00		1.00	1.00		1.00	1.00		1.00	1.00		1.00
Parking Bus, Adj	1.00	1.00	1.00	1.00	1.00	1.00	1.00	1.00	1.00	1.00	1.00	1.00
Work Zone On Approach		No			No			No			No	
Adj Sat Flow, veh/h/ln	1870	1870	1870	1870	1870	1856	1870	1870	1870	1870	1856	1870
Adj Flow Rate, veh/h	47	3	3	30	1	0	2	170	17	1074	205	21
Peak Hour Factor	0.92	0.92	0.92	0.92	0.92	0.92	0.92	0.92	0.92	0.92	0.92	0.92
Percent Heavy Veh, %	2	2	2	2	2	3	2	2	2	2	3	2
Cap, veh/h	160	5	5	173	4		47	222	22	1143	1378	141
Arrive On Green	0.05	0.05	0.05	0.05	0.05	0.00	0.13	0.13	0.13	0.64	0.83	0.83
Sat Flow, veh/h	1377	88	88	1558	82	1572	6	1666	165	1781	1655	170
Grp Volume(v), veh/h	53	0	0	31	0	0	189	0	0	1074	0	226
Grp Sat Flow(s),veh/h/ln	1553	0	0	1639	0	1572	1837	0	0	1781	0	1825
Q Serve(g_s), s	1.2	0.0	0.0	0.0	0.0	0.0	0.5	0.0	0.0	42.8	0.0	1.9
Cycle Q Clear(g_c), s	2.5	0.0	0.0	1.3	0.0	0.0	7.8	0.0	0.0	42.8	0.0	1.9
Prop In Lane	0.89		0.06	0.97		1.00	0.01		0.09	1.00		0.09
Lane Grp Cap(c), veh/h	169	0	0	178	0		291	0	0	1143	0	1519
V/C Ratio(X)	0.31	0.00	0.00	0.17	0.00		0.65	0.00	0.00	0.94	0.00	0.15
Avail Cap(c_a), veh/h	764	0	0	763	0		491	0	0	1830	0	2422
HCM Platoon Ratio	1.00	1.00	1.00	1.00	1.00	1.00	1.00	1.00	1.00	1.00	1.00	1.00
Upstream Filter(I)	1.00	0.00	0.00	1.00	0.00	0.00	1.00	0.00	0.00	1.00	0.00	1.00
Uniform Delay (d), s/veh	36.4	0.0	0.0	35.9	0.0	0.0	32.9	0.0	0.0	12.7	0.0	1.3
Incr Delay (d2), s/veh	1.0	0.0	0.0	0.5	0.0	0.0	2.4	0.0	0.0	6.9	0.0	0.0
Initial Q Delay(d3),s/veh	0.0	0.0	0.0	0.0	0.0	0.0	0.0	0.0	0.0	0.0	0.0	0.0
%ile BackOfQ(50%),veh/ln	1.0	0.0	0.0	0.6	0.0	0.0	3.6	0.0	0.0	16.1	0.0	0.3
Unsig. Movement Delay, s/veh												
LnGrp Delay(d),s/veh	37.4	0.0	0.0	36.3	0.0	0.0	35.4	0.0	0.0	19.6	0.0	1.3
LnGrp LOS	D	A	A	D	A		D	A	A	B	A	A
Approach Vol, veh/h		53			31			189			1300	
Approach Delay, s/veh		37.4			36.3			35.4			16.4	
Approach LOS		D			D			D			B	

Timer - Assigned Phs	1	2		4		6		8				
Phs Duration (G+Y+Rc), s	55.0	15.0		8.7		70.0		8.7				
Change Period (Y+Rc), s	4.5	4.5		4.5		4.5		4.5				
Max Green Setting (Gmax), s	80.8	19.1		36.6		104.4		36.6				
Max Q Clear Time (g_c+I1), s	44.8	9.8		4.5		3.9		3.3				
Green Ext Time (p_c), s	5.7	0.7		0.2		1.6		0.1				

Intersection Summary												
HCM 6th Ctrl Delay			19.8									
HCM 6th LOS			B									

Notes

Unsignalized Delay for [WBR] is excluded from calculations of the approach delay and intersection delay.

Intersection	
Int Delay, s/veh	2.1

Movement	EBL	EBT	EBR	WBL	WBT	WBR	NBL	NBT	NBR	SBL	SBT	SBR
Lane Configurations												
Traffic Vol, veh/h	14	4	9	12	5	35	3	340	4	67	601	28
Future Vol, veh/h	14	4	9	12	5	35	3	340	4	67	601	28
Conflicting Peds, #/hr	0	0	0	0	0	0	0	0	0	0	0	0
Sign Control	Stop	Stop	Stop	Stop	Stop	Stop	Free	Free	Free	Free	Free	Free
RT Channelized	-	-	None	-	-	None	-	-	None	-	-	None
Storage Length	-	-	-	-	-	-	-	-	-	-	-	-
Veh in Median Storage, #	-	0	-	-	0	-	-	0	-	-	0	-
Grade, %	-	0	-	-	0	-	-	0	-	-	0	-
Peak Hour Factor	92	92	92	92	92	92	92	92	92	92	92	92
Heavy Vehicles, %	2	2	2	14	2	2	2	2	2	2	2	2
Mvmt Flow	15	4	10	13	5	38	3	370	4	73	653	30

Major/Minor	Minor2			Minor1			Major1			Major2		
Conflicting Flow All	1214	1194	668	1199	1207	372	683	0	0	374	0	0
Stage 1	814	814	-	378	378	-	-	-	-	-	-	-
Stage 2	400	380	-	821	829	-	-	-	-	-	-	-
Critical Hdwy	7.12	6.52	6.22	7.24	6.52	6.22	4.12	-	-	4.12	-	-
Critical Hdwy Stg 1	6.12	5.52	-	6.24	5.52	-	-	-	-	-	-	-
Critical Hdwy Stg 2	6.12	5.52	-	6.24	5.52	-	-	-	-	-	-	-
Follow-up Hdwy	3.518	4.018	3.318	3.626	4.018	3.318	2.218	-	-	2.218	-	-
Pot Cap-1 Maneuver	158	187	458	153	183	674	910	-	-	1184	-	-
Stage 1	372	391	-	620	615	-	-	-	-	-	-	-
Stage 2	626	614	-	352	385	-	-	-	-	-	-	-
Platoon blocked, %								-	-		-	-
Mov Cap-1 Maneuver	134	168	458	135	164	674	910	-	-	1184	-	-
Mov Cap-2 Maneuver	134	168	-	135	164	-	-	-	-	-	-	-
Stage 1	371	352	-	618	613	-	-	-	-	-	-	-
Stage 2	583	612	-	306	347	-	-	-	-	-	-	-

Approach	EB	WB	NB	SB
HCM Control Delay, s	28.4	19.5	0.1	0.8
HCM LOS	D	C		

Minor Lane/Major Mvmt	NBL	NBT	NBR	EBLn1	WBLn1	SBL	SBT	SBR
Capacity (veh/h)	910	-	-	183	304	1184	-	-
HCM Lane V/C Ratio	0.004	-	-	0.16	0.186	0.062	-	-
HCM Control Delay (s)	9	0	-	28.4	19.5	8.2	0	-
HCM Lane LOS	A	A	-	D	C	A	A	-
HCM 95th %tile Q(veh)	0	-	-	0.6	0.7	0.2	-	-

Intersection	
Int Delay, s/veh	1

Movement	EBL	EBT	EBR	WBL	WBT	WBR	NBL	NBT	NBR	SBL	SBT	SBR
Lane Configurations												
Traffic Vol, veh/h	16	2	25	4	0	5	37	1260	1	7	634	42
Future Vol, veh/h	16	2	25	4	0	5	37	1260	1	7	634	42
Conflicting Peds, #/hr	0	0	0	0	0	0	0	0	0	0	0	0
Sign Control	Stop	Stop	Stop	Stop	Stop	Stop	Free	Free	Free	Free	Free	Free
RT Channelized	-	-	Free	-	-	Stop	-	-	None	-	-	None
Storage Length	-	-	50	-	-	-	610	-	600	565	-	550
Veh in Median Storage, #	-	0	-	-	0	-	-	0	-	-	0	-
Grade, %	-	0	-	-	0	-	-	0	-	-	0	-
Peak Hour Factor	92	92	92	92	92	92	92	92	92	92	92	92
Heavy Vehicles, %	2	2	2	2	2	2	14	6	2	17	19	6
Mvmt Flow	17	2	27	4	0	5	40	1370	1	8	689	46

Major/Minor	Minor2			Minor1			Major1			Major2		
Conflicting Flow All	1470	2156	-	1812	2201	685	735	0	0	1371	0	0
Stage 1	705	705	-	1450	1450	-	-	-	-	-	-	-
Stage 2	765	1451	-	362	751	-	-	-	-	-	-	-
Critical Hdwy	7.54	6.54	-	7.54	6.54	6.94	4.38	-	-	4.44	-	-
Critical Hdwy Stg 1	6.54	5.54	-	6.54	5.54	-	-	-	-	-	-	-
Critical Hdwy Stg 2	6.54	5.54	-	6.54	5.54	-	-	-	-	-	-	-
Follow-up Hdwy	3.52	4.02	-	3.52	4.02	3.32	2.34	-	-	2.37	-	-
Pot Cap-1 Maneuver	89	47	0	49	44	391	791	-	-	425	-	-
Stage 1	393	437	0	137	194	-	-	-	-	-	-	-
Stage 2	362	194	0	629	416	-	-	-	-	-	-	-
Platoon blocked, %								-	-		-	-
Mov Cap-1 Maneuver	83	44	-	45	41	391	791	-	-	425	-	-
Mov Cap-2 Maneuver	83	44	-	45	41	-	-	-	-	-	-	-
Stage 1	373	429	-	130	184	-	-	-	-	-	-	-
Stage 2	339	184	-	614	408	-	-	-	-	-	-	-

Approach	EB	WB	NB	SB
HCM Control Delay, s	68.1	44.4	0.3	0.1
HCM LOS	F	E		

Minor Lane/Major Mvmt	NBL	NBT	NBR	EBLn1	EBLn2	WBLn1	SBL	SBT	SBR
Capacity (veh/h)	791	-	-	76	-	101	425	-	-
HCM Lane V/C Ratio	0.051	-	-	0.257	-	0.097	0.018	-	-
HCM Control Delay (s)	9.8	-	-	68.1	0	44.4	13.6	-	-
HCM Lane LOS	A	-	-	F	A	E	B	-	-
HCM 95th %tile Q(veh)	0.2	-	-	0.9	-	0.3	0.1	-	-

Appendix F

Collision Rate Calculations and Data

OFFICER REPORTED CRASHES THAT OCCURRED ON ALL ROADS IN WALLA WALLA COUNTY

01/01/2016 - 12/31/2020

Under 23 U.S. Code § 148 and 23 U.S. Code § 409, safety data, reports, surveys, schedules, lists compiled or collected for the purpose of identifying, evaluating, or planning the safety enhancement of potential crash sites, hazardous roadway conditions, or railway-highway crossings are not subject to discovery or admitted into evidence in a Federal or State court

Int	JURISDICTION	COUNTY	CITY	PRIMARY TRAFFICWAY	INTERSECTING TRAFFICWAY	MILEPOST	SR ONLY HISTORY/ SUSPENSE	REPORT NUMBER	DATE	TIME	MOST SEVERE INJURY TYPE	# INJ	# FAT	# VEH	# PEDS	# BIKES	VEHICLE 1 TYPE	VEHICLE 2 TYPE	JUNCTION RELATIONSHIP	WEATHER	ROADWAY SURFACE CONDITION	LIGHTING CONDITION	FIRST COLLISION TYPE / OBJECT STRUCK	VEHICLE 1 ACTION	VEHICLE 2 ACTION	VEHICLE 1 COMPASS DIRECTION FROM	VEHICLE 1 COMPASS DIRECTION TO	VEHICLE 2 COMPASS DIRECTION FROM	VEHICLE 2 COMPASS DIRECTION TO	MV DRIVER CONTRIBUTING CIRCUMSTANCE 1 (UNIT 1)	MV DRIVER CONTRIBUTING CIRCUMSTANCE 2 (UNIT 1)	MV DRIVER CONTRIBUTING CIRCUMSTANCE 3 (UNIT 1)	MV DRIVER CONTRIBUTING CIRCUMSTANCE 1 (UNIT 2)	FIRST IMPACT LOCATION (City, County & Misc Trafficways - 2010 forward)	WA STATE PLANE SOUTH - X 2010 - FORWARD	WA STATE PLANE SOUTH - Y 2010 - FORWARD
1	State Route	Walla Walla		012S129495		0.00	No	E647561	02/28/2017	15:13	No Apparent Injury	0	0	1	0	0	Truck - Double Trailer Combinations		At Intersection and Related	Clear or Partly Cloudy	Dry	Daylight	Vehicle overturned	Making Left Turn		Southwest	Northwest			Operating Defective Equipment	Inattention			Lane 1 On Ramp Decreasing Milepost Side of Mainline	2017046.47	323048.05
1	State Route	Walla Walla		012S129495		0.00	No	E992687	12/05/2019	18:46	No Apparent Injury	0	0	2	0	0	Truck Tractor & Semi-Trailer	Passenger Car	Entering Roundabout	Clear	Dry	Dark-Street Lights On	Entering at angle	Making Right Turn	Going Straight Ahead	East	North	South	North	Did Not Grant RW to Vehicle			None	Lane 1 On Ramp Decreasing Milepost Side of Mainline	2017072.11	323030.68
1	State Route	Walla Walla		012S129495		0.02	No	E841238	09/18/2018	07:35	No Apparent Injury	0	0	2	0	0	Pickup,Panel Truck or Vanette under 10,000 lb	Passenger Car	At Intersection and Related	Clear or Partly Cloudy	Dry	Daylight	Same direction -- both turning right -- one stopped -- rear end	Making Right Turn	Stopped for Traffic	East	West	Vehicle Stopped	Vehicle Stopped	Inattention	Distractions Outside Vehicle	Follow Too Closely	None	Lane 1 On Ramp Decreasing Milepost Side of Mainline	2016993.45	323108.20
1	State Route	Walla Walla		124		0.07	No	E584613	09/11/2016	22:35	No Apparent Injury	0	0	1	0	0	Pickup,Panel Truck or Vanette under 10,000 lb		Entering Roundabout	Clear or Partly Cloudy	Dry	Dark-Street Lights On	Traffic Island	Going Straight Ahead		South	North			Inattention				Increasing Other Location	2017055.43	323048.79
1	State Route	Walla Walla		124		0.07	No	E677521	05/30/2017	13:07	No Apparent Injury	0	0	1	0	0	Motorcycle		At Intersection and Related	Clear or Partly Cloudy	Dry	Daylight	Vehicle overturned	Going Straight Ahead		East	West			None				Lane 1 Decreasing Milepost	2017046.51	323046.84
1	State Route	Walla Walla		124		0.07	No	E701863	08/14/2017	08:26	No Apparent Injury	0	0	1	0	0	Pickup,Panel Truck or Vanette under 10,000 lb		Entering Roundabout	Clear or Partly Cloudy	Dry	Daylight	Traffic Island	Going Straight Ahead		East	West			Apparently Asleep or Fatigued	Inattention			Increasing Other Location	2017048.72	323044.87
1	State Route	Walla Walla		124		0.07	No	E866077	11/10/2018	06:13	No Apparent Injury	0	0	2	0	0	Pickup,Panel Truck or Vanette under 10,000 lb	Pickup,Panel Truck or Vanette under 10,000 lb	Entering Roundabout	Clear or Partly Cloudy	Dry	Daylight	Entering at angle	Going Straight Ahead	Going Straight Ahead	West	South	South	North	Did Not Grant RW to Vehicle			None	Lane 1 Increasing Milepost	2017054.79	323045.53
1	State Route	Walla Walla		124		0.07	No	E927329	06/03/2019	20:31	No Apparent Injury	0	0	1	0	0	Pickup,Panel Truck or Vanette under 10,000 lb		Entering Roundabout	Clear or Partly Cloudy	Dry	Dusk	Linear Curb	Going Straight Ahead		West	East			Apparently Asleep or Fatigued	Apparently Fatigued			Increasing Other Location	2017081.95	323024.31
1	State Route	Walla Walla		124		0.07	No	EA19469	02/27/2020	23:56	Suspected Minor Injury	1	0	1	0	0	Passenger Car		Entering Roundabout	Clear	Dry	Dark-Street Lights On	Traffic Island	Going Straight Ahead		South	North			Exceeding Reas. Safe Speed				Increasing Other Location	2017081.04	323023.13
1	State Route	Walla Walla		124		0.07	No	EA67659	09/21/2020	07:05	Suspected Minor Injury	1	0	1	0	0	Passenger Car		Entering Roundabout	Clear	Dry	Daylight	Traffic Island	Going Straight Ahead		West	East			Apparently Asleep or Fatigued				Increasing Other Location	2017091.11	323021.68
1	State Route	Walla Walla		124		0.09	No	E948012	08/03/2019	16:51	No Apparent Injury	0	0	2	0	0	Passenger Car	Passenger Car	Intersection Related but Not at Intersection	Clear or Partly Cloudy	Dry	Daylight	From opposite direction - both moving - head-on	Going Straight Ahead	Slowing	West	East	East	West	Operating Defective Equipment	Non Motorist on Wrong Side of Road		None	Lane 2 Decreasing Milepost	2017117.13	323125.34
1	State Route	Walla Walla		124		0.12	No	E926195	06/01/2019	14:11	No Apparent Injury	0	0	2	0	0	Passenger Car	Passenger Car	Not at Intersection and Not Related	Clear or Partly Cloudy	Dry	Daylight	From same direction - all others	Making U-Turn	Going Straight Ahead	West	West	West	East	Improper U-Turn			None	Lane 1 Increasing Milepost	2017162.30	323260.66
2	State Route	Walla Walla		012LX29536		0.13	No	E873976	12/04/2018	18:10	Unknown	0	0	2	0	0	Passenger Car	Passenger Car	Roundabout Related but not at Roundabout	Clear or Partly Cloudy	Dry	Dark-Street Lights On	From same direction - both going straight - both moving - sideswipe	Merging (Entering Traffic)	Going Straight Ahead	South	North	South	North	Did Not Grant RW to Vehicle			None	Lane 1 LX Decreasing Milepost	2016836.28	322013.53
2	State Route	Walla Walla		012LX29536		0.19	No	E613645	11/26/2016	15:37	No Apparent Injury	0	0	2	0	0	Passenger Car	Passenger Car	Exiting Roundabout	Clear or Partly Cloudy	Dry	Daylight	Entering at angle	Going Straight Ahead	Going Straight Ahead	South	North	East	West	Did Not Grant RW to Vehicle			None	Lane 1 LX Decreasing Milepost	2016837.73	321708.01
2	State Route	Walla Walla		012LX29536		0.19	No	E830365	08/10/2018	23:54	Possible Injury	1	0	1	0	0	Pickup,Panel Truck or Vanette under 10,000 lb		Exiting Roundabout	Clear or Partly Cloudy	Dry	Dark-Street Lights On	Traffic Island	Going Straight Ahead		East	West			Apparently Ill				Increasing Other Location	2016840.81	321704.23
2	State Route	Walla Walla		012LX29536		0.19	No	E915445	04/09/2019	00:30	Unknown	0	0	1	0	0	Passenger Car		Circulating Roundabout	Overcast	Wet	Dark-Street Lights On	Over Embankment - No Guardrail Present	Other*		South	North			Exceeding Reas. Safe Speed				Past Right Shoulder LX Increasing Milepost (Prior to 2002 Impact Location Code was not lane specific)	2016840.81	321704.23
3	County Road	Walla Walla		14750		0.27	No	E774494	02/28/2018	07:54	Unknown	0	0	2	0	0	Passenger Car	Passenger Car	At Intersection and Related	Clear or Partly Cloudy	Dry	Daylight	From same direction - both going straight - one stopped - rear-end	Going Straight Ahead	Stopped for Traffic	East	West	East	South	Follow Too Closely			None	Lane of Primary Trafficway	2016843.08	321039.36
3	Miscellaneous T	Walla Walla		JANTZ	FIFTH AVE		No	E604226	09/19/2016	07:47	Possible Injury	1	0	2	0	0	Pickup,Panel Truck or Vanette under 10,000 lb	School Bus	At Intersection and Related	Clear or Partly Cloudy	Dry	Daylight	From same direction - both going straight - one stopped - rear-end	Going Straight Ahead	Stopped at Signal or Stop Sign	East	West	Vehicle Stopped	Vehicle Stopped	Inattention	Follow Too Closely		None	Lane of Primary Trafficway	2016832.12	321046.74
3	Miscellaneous T	Walla Walla		JANTZ RD	5TH AVE		No	EA50854	07/21/2020	13:48	No Apparent Injury	0	0	1	0	0	Truck Tractor & Semi-Trailer		At Intersection and Related	Clear	Dry	Daylight	Over Roadway Power Lines	Making Right Turn		East	North			Other Contributing Circ Not Listed				Lane of Primary Trafficway	2016841.11	321067.41
4	County Road	Walla Walla		14270	14290	0.18	No	E866312	11/10/2018	14:40	No Apparent Injury	0	0	2	0	0	Passenger Car	Passenger Car	At Intersection and Related	Clear or Partly Cloudy	Dry	Daylight	Entering at angle	Going Straight Ahead	Going Straight Ahead	North	South	West	East	Other Contributing Circ Not Listed			None	Lane of Primary Trafficway	2020233.28	318615.58
6	State Route	Walla Walla		012		298.64	No	EA35957	05/24/2020	12:59	Suspected Minor Injury	3	0	2	0	0	Passenger Car	Passenger Car	At Intersection and Related	Clear	Dry	Daylight	Entering at angle	Making Left Turn	Going Straight Ahead	South	West	West	East	Did Not Grant RW to Vehicle			None	Lane 2 Increasing Milepost	2029451.39	310790.52

Collision Rate Calculations at
SR 124 / US Highway 12 Westbound Ramp

Intersection:	SR 124 / US Highway 12 Westbound Ramp	Date	3/21/2022

Ra =	System Wide Average collision rate =	0.6
K =	Statistical Constant =	1.645
Average Daily cars passing Through intersection		
	ADT	5220
		140
		3890
		0
M=	Millions of Vehicles for a five year period =	**16.88125**
Rc=	Critical collision Rate =	**0.88**

Collision Rate

Number of collision s =	12
Number of years =	5
collision Rate =	**0.71**

Rc= Ra+(K*Ra/M)^.5)-1/(2*M)

ADT = 2021 PM Count X 10
PM Peak Hour= Approx. 10% ADT

Collision Rate Calculations at
5th Avenue / Gateway Road and US Highway 12 Eastbound Ramp

Intersection:	5th Avenue / Gateway Road and US-12 EB	Date	3/21/2022

Ra =	System Wide Average collision rate =	0.6
K =	Statistical Constant =	1.645
Average Daily cars passing Through intersection		
	ADT	560
		4360
		1510
		530
M=	Millions of Vehicles for a five year period =	**12.702**
Rc=	Critical collision Rate =	**0.92**

Collision Rate

Number of collision s =	4
Number of years =	5
collision Rate =	**0.31**

Rc= Ra+(K*Ra/M)^.5)-1/(2*M)

ADT = 2021 PM Count X 10
PM Peak Hour= Approx. 10% ADT

Collision Rate Calculations at
5th Avenue / Jantz Road

Intersection:	5th Avenue / Jantz Road	Date	3/21/2022

Ra =	System Wide Average collision rate =	0.6
K =	Statistical Constant =	1.645
Average Daily cars passing Through intersection		
	ADT	2460
		900
		870
		0
M=	Millions of Vehicles for a five year period =	**7.71975**
Rc=	Critical collision Rate =	**0.99**

Collision Rate

Number of collision s =	3
Number of years =	5
collision Rate =	**0.39**

Rc= Ra+(K*Ra/M)^.5)-1/(2*M)

ADT = 2021 PM Count X 10
PM Peak Hour= Approx. 10% ADT

Collision Rate Calculations at
Jantz Road and Ray Boulevard / Humorist Road

Intersection:	Jantz Rd and Ray Blvd / Humorist Rd	Date	3/21/2022

Ra =	System Wide Average collision rate =	0.6
K =	Statistical Constant =	1.645
Average Daily cars passing Through intersection		
	ADT	1280
		370
		360
		130
M=	Millions of Vehicles for a five year period =	**3.9055**
Rc=	Critical collision Rate =	**1.12**

Collision Rate

Number of collision s =	1
Number of years =	5
collision Rate =	**0.26**

Rc= Ra+(K*Ra/M)^.5)-1/(2*M)

ADT = 2021 PM Count X 10
PM Peak Hour= Approx. 10% ADT

Collision Rate Calculations at
Quincy Road / Hanson Loop Road

Intersection:	Quincy Road / Hanson Loop Road	Date	3/21/2022

Ra =	System Wide Average collision rate =	0.6
K =	Statistical Constant =	1.645
Average Daily cars passing Through intersection		
	ADT	150
		490
		50
		100
M=	Millions of Vehicles for a five year period =	**1.44175**
Rc=	Critical collision Rate =	**1.31**

Collision Rate

Number of collision s =	0
Number of years =	5
collision Rate =	**0.00**

Rc= Ra+(K*Ra/M)^.5)-1/(2*M)

ADT = 2021 PM Count X 10
PM Peak Hour= Approx. 10% ADT

Collision Rate Calculations at
US Highway 12 / Hanson Loop Road

Intersection:	US Highway 12 / Hanson Loop Road	Date	3/21/2022

Ra =	System Wide Average collision rate =	0.6
K =	Statistical Constant =	1.645
Average Daily cars passing Through intersection		
	ADT	3830
		70
		9590
		220
M=	Millions of Vehicles for a five year period =	**25.02075**
Rc=	Critical collision Rate =	**0.83**

Collision Rate

Number of collision s =	1
Number of years =	5
collision Rate =	**0.04**

Rc= Ra+(K*Ra/M)^.5)-1/(2*M)

ADT = 2021 PM Count X 10
PM Peak Hour= Approx. 10% ADT

Collision Rate Calculations at
Quincy Road / Road B

Intersection:	Quincy Road / South Drive	Date	3/21/2022

Ra =	System Wide Average collision rate =	0.6
K =	Statistical Constant =	1.645
Average Daily cars passing Through intersection		
	ADT	120
		110
		0
		0
M=	Millions of Vehicles for a five year period =	**0.41975**
Rc=	Critical collision Rate =	**1.38**

Collision Rate

Number of collision s =	0
Number of years =	5
collision Rate =	**0.00**

Rc= Ra+(K*Ra/M)^.5)-1/(2*M)

ADT = 2021 PM Count X 10
PM Peak Hour= Approx. 10% ADT

Collision Rate Calculations at
Quincy Road / Road C

Intersection:	Quincy Road / South Drive	Date	3/21/2022

Ra =	System Wide Average collision rate =	0.6
K =	Statistical Constant =	1.645
Average Daily cars passing Through intersection		
	ADT	120
		110
		0
		0
M=	Millions of Vehicles for a five year period =	**0.41975**
Rc=	Critical collision Rate =	**1.38**

Collision Rate

Number of collision s =	0
Number of years =	5
collision Rate =	**0.00**

Rc= Ra+(K*Ra/M)^.5)-1/(2*M)

ADT = 2021 PM Count X 10
PM Peak Hour= Approx. 10% ADT

Appendix G

Sensitivity Analysis Level of Service Calculations

MOVEMENT SUMMARY

Site: 1 [1. SR 124 / US Highway 12 Westbound Ramp (2025-AM-With_Phase_1_Both_Projects) (Site Folder: 2025-AM-With_Phase_1_Both_Projects)]

SR 124 / US Highway 12 Westbound Ramp
Site Category: (None)
Roundabout

Vehicle Movement Performance

Mov ID	Turn	INPUT VOLUMES [Total veh/h	HV] %	DEMAND FLOWS [Total veh/h	HV] %	Deg. Satn v/c	Aver. Delay sec	Level of Service	95% BACK OF QUEUE [Veh. veh	Dist] ft	Prop. Que	Effective Stop Rate	Aver. No. Cycles	Aver. Speed mph
South: SR 124														
3u	U	1	2.0	1	2.0	0.455	11.0	LOS B	0.0	0.0	0.00	0.64	0.00	35.2
3	L2	470	9.0	566	9.0	0.455	9.2	LOS A	0.0	0.0	0.00	0.64	0.00	34.4
8	T1	191	8.0	230	8.0	0.455	4.9	LOS A	0.0	0.0	0.00	0.64	0.00	34.7
Approach		662	8.7	798	8.7	0.455	7.9	LOS A	0.0	0.0	0.00	0.64	0.00	34.5
East: US Highway 12 Westbound Ramp														
1	L2	68	9.0	82	9.0	0.158	14.9	LOS B	0.8	21.1	0.70	0.85	0.70	28.6
16	R2	6	17.0	7	17.0	0.158	11.4	LOS B	0.8	21.1	0.70	0.85	0.70	28.0
Approach		74	9.6	89	9.6	0.158	14.6	LOS B	0.8	21.1	0.70	0.85	0.70	28.5
North: SR 124														
4	T1	89	6.0	107	6.0	0.128	8.4	LOS A	0.7	17.6	0.63	0.70	0.63	34.5
14	R2	140	5.0	169	5.0	0.184	7.6	LOS A	0.9	24.5	0.58	0.71	0.58	34.1
Approach		229	5.4	276	5.4	0.184	7.9	LOS A	0.9	24.5	0.60	0.71	0.60	34.2
All Vehicles		965	8.0	1163	8.0	0.455	8.4	LOS A	0.9	24.5	0.20	0.67	0.20	33.9

Site Level of Service (LOS) Method: Delay & Degree of Saturation (SIDRA). Site LOS Method is specified in the Parameter Settings dialog (Site tab).
Roundabout LOS Method: Same as Signalised Intersections.
Vehicle movement LOS values are based on average delay and v/c ratio (degree of saturation) per movement.
Intersection and Approach LOS values are based on average delay for all movements (v/c not used).
Roundabout Capacity Model: SIDRA Standard.
Delay Model: SIDRA Standard (Geometric Delay is included).
Queue Model: HCM Queue Formula.
Gap-Acceptance Capacity: SIDRA Standard (Akçelik M3D).
HV (%) values are calculated for All Movement Classes of All Heavy Vehicle Model Designation.

MOVEMENT SUMMARY

Site: 1 [2. SR 124 and 5th Avenue / Gateway Road and US Highway 12 Eastbound Ramp (2025-AM- With_Phase_1_Both (Site Folder: 2025-AM- With_Phase_1_Both_Projects)]

SR 124 and 5th Avenue / Gateway Road and US Highway 12 Eastbound Ramp
Site Category: (None)
Roundabout

Vehicle Movement Performance

Mov ID	Turn	INPUT VOLUMES [Total veh/h	HV] %	DEMAND FLOWS [Total veh/h	HV] %	Deg. Satn v/c	Aver. Delay sec	Level of Service	95% BACK OF QUEUE [Veh. veh	Dist] ft	Prop. Que	Effective Stop Rate	Aver. No. Cycles	Aver. Speed mph
South: 5th Avenue														
3	L2	7	2.0	8	2.0	0.534	6.5	LOS A	4.0	103.2	0.44	0.37	0.44	24.7
8	T1	449	3.0	528	3.0	0.534	2.5	LOS A	4.0	103.2	0.44	0.37	0.44	24.6
18	R2	25	33.0	29	33.0	0.534	4.7	LOS A	4.0	103.2	0.44	0.37	0.44	24.8
Approach		481	4.5	566	4.5	0.534	2.6	LOS A	4.0	103.2	0.44	0.37	0.44	24.6
East: US Highway 12 Westbound Ramp														
1	L2	346	2.0	407	2.0	0.544	12.3	LOS B	4.1	105.4	0.74	0.91	0.86	29.9
6	T1	84	2.0	99	2.0	0.544	8.0	LOS A	4.1	105.4	0.74	0.91	0.86	29.9
16	R2	148	10.0	174	10.0	0.544	3.8	LOS A	4.1	105.4	0.04	0.50	0.04	32.4
Approach		578	4.0	680	4.0	0.544	9.5	LOS A	4.1	105.4	0.56	0.80	0.65	30.5
North: SR 124														
7	L2	7	2.0	8	2.0	0.260	11.3	LOS B	1.3	35.4	0.60	0.74	0.60	34.5
4	T1	132	7.0	155	7.0	0.260	7.3	LOS A	1.3	35.4	0.60	0.74	0.60	34.6
14	R2	19	50.0	22	50.0	0.260	9.4	LOS A	1.3	35.4	0.60	0.74	0.60	32.4
Approach		158	11.9	186	11.9	0.260	7.7	LOS A	1.3	35.4	0.60	0.74	0.60	34.3
West: Gateway Road														
5	L2	64	20.0	75	20.0	0.166	9.7	LOS A	0.8	23.9	0.64	0.78	0.64	23.2
2	T1	7	100.0	8	100.0	0.166	10.6	LOS B	0.8	23.9	0.64	0.78	0.64	23.1
12	R2	6	17.0	7	17.0	0.166	6.0	LOS A	0.8	23.9	0.64	0.78	0.64	22.7
Approach		77	27.0	91	27.0	0.166	9.5	LOS A	0.8	23.9	0.64	0.78	0.64	23.2
All Vehicles		1294	6.6	1522	6.6	0.544	6.7	LOS A	4.1	105.4	0.52	0.63	0.56	27.9

Site Level of Service (LOS) Method: Delay & Degree of Saturation (SIDRA). Site LOS Method is specified in the Parameter Settings dialog (Site tab).
Roundabout LOS Method: Same as Signalised Intersections.
Vehicle movement LOS values are based on average delay and v/c ratio (degree of saturation) per movement.
Intersection and Approach LOS values are based on average delay for all movements (v/c not used).
Roundabout Capacity Model: SIDRA Standard.
Delay Model: SIDRA Standard (Geometric Delay is included).
Queue Model: HCM Queue Formula.
Gap-Acceptance Capacity: SIDRA Standard (Akçelik M3D).
HV (%) values are calculated for All Movement Classes of All Heavy Vehicle Model Designation.

Intersection	
Int Delay, s/veh	8.4

Movement	EBL	EBT	EBR	WBL	WBT	WBR	NBL	NBT	NBR	SBL	SBT	SBR
Lane Configurations												
Traffic Vol, veh/h	0	0	0	6	0	360	0	133	11	303	183	0
Future Vol, veh/h	0	0	0	6	0	360	0	133	11	303	183	0
Conflicting Peds, #/hr	0	0	0	0	0	0	0	0	0	0	0	0
Sign Control	Stop	Stop	Stop	Stop	Stop	Stop	Free	Free	Free	Free	Free	Free
RT Channelized	-	-	None	-	-	None	-	-	None	-	-	None
Storage Length	-	-	-	-	-	-	-	-	-	-	-	-
Veh in Median Storage, #	-	0	-	-	0	-	-	0	-	-	0	-
Grade, %	-	0	-	-	0	-	-	0	-	-	0	-
Peak Hour Factor	81	81	81	81	81	81	81	81	81	81	81	81
Heavy Vehicles, %	2	2	2	2	2	8	2	2	2	6	2	2
Mvmt Flow	0	0	0	7	0	444	0	164	14	374	226	0

Major/Minor	Minor2			Minor1			Major1			Major2		
Conflicting Flow All	1367	1152	226	1145	1145	171	226	0	0	178	0	0
Stage 1	974	974	-	171	171	-	-	-	-	-	-	-
Stage 2	393	178	-	974	974	-	-	-	-	-	-	-
Critical Hdwy	7.12	6.52	6.22	7.12	6.52	6.28	4.12	-	-	4.16	-	-
Critical Hdwy Stg 1	6.12	5.52	-	6.12	5.52	-	-	-	-	-	-	-
Critical Hdwy Stg 2	6.12	5.52	-	6.12	5.52	-	-	-	-	-	-	-
Follow-up Hdwy	3.518	4.018	3.318	3.518	4.018	3.372	2.218	-	-	2.254	-	-
Pot Cap-1 Maneuver	124	198	813	177	200	857	1342	-	-	1374	-	-
Stage 1	303	330	-	831	757	-	-	-	-	-	-	-
Stage 2	632	752	-	303	330	-	-	-	-	-	-	-
Platoon blocked, %								-	-		-	-
Mov Cap-1 Maneuver	45	136	813	134	138	857	1342	-	-	1374	-	-
Mov Cap-2 Maneuver	45	136	-	134	138	-	-	-	-	-	-	-
Stage 1	303	227	-	831	757	-	-	-	-	-	-	-
Stage 2	304	752	-	209	227	-	-	-	-	-	-	-

Approach	EB	WB	NB	SB
HCM Control Delay, s	0	15.6	0	5.4
HCM LOS	A	C		

Minor Lane/Major Mvmt	NBL	NBT	NBR	EBLn1	WBLn1	SBL	SBT	SBR
Capacity (veh/h)	1342	-	-	-	787	1374	-	-
HCM Lane V/C Ratio	-	-	-	-	0.574	0.272	-	-
HCM Control Delay (s)	0	-	-	0	15.6	8.6	0	-
HCM Lane LOS	A	-	-	A	C	A	A	-
HCM 95th %tile Q(veh)	0	-	-	-	3.7	1.1	-	-

Intersection	
Int Delay, s/veh	14.1

Movement	EBL	EBT	EBR	WBL	WBT	WBR	NBL	NBT	NBR	SBL	SBT	SBR
Lane Configurations												
Traffic Vol, veh/h	28	2	2	4	3	66	2	292	2	22	103	9
Future Vol, veh/h	28	2	2	4	3	66	2	292	2	22	103	9
Conflicting Peds, #/hr	0	0	0	0	0	0	0	0	0	0	0	0
Sign Control	Free	Free	Free	Free	Free	Free	Stop	Stop	Stop	Stop	Stop	Stop
RT Channelized	-	-	None	-	-	None	-	-	None	-	-	None
Storage Length	-	-	-	-	-	-	-	-	-	-	-	-
Veh in Median Storage, #	-	0	-	-	0	-	-	0	-	-	0	-
Grade, %	-	0	-	-	0	-	-	0	-	-	0	-
Peak Hour Factor	72	72	72	72	72	72	72	72	72	72	72	72
Heavy Vehicles, %	6	2	2	2	2	5	100	7	2	2	2	2
Mvmt Flow	39	3	3	6	4	92	3	406	3	31	143	13

Major/Minor	Major1			Major2			Minor1			Minor2		
Conflicting Flow All	96	0	0	6	0	0	223	191	5	349	146	50
Stage 1	-	-	-	-	-	-	83	83	-	62	62	-
Stage 2	-	-	-	-	-	-	140	108	-	287	84	-
Critical Hdwy	4.16	-	-	4.12	-	-	8.1	6.57	6.22	7.12	6.52	6.22
Critical Hdwy Stg 1	-	-	-	-	-	-	7.1	5.57	-	6.12	5.52	-
Critical Hdwy Stg 2	-	-	-	-	-	-	7.1	5.57	-	6.12	5.52	-
Follow-up Hdwy	2.254	-	-	2.218	-	-	4.4	4.063	3.318	3.518	4.018	3.318
Pot Cap-1 Maneuver	1473	-	-	1615	-	-	566	695	1078	606	745	1018
Stage 1	-	-	-	-	-	-	730	816	-	949	843	-
Stage 2	-	-	-	-	-	-	675	796	-	720	825	-
Platoon blocked, %		-	-		-	-						
Mov Cap-1 Maneuver	1473	-	-	1615	-	-	463	673	1078	308	722	1018
Mov Cap-2 Maneuver	-	-	-	-	-	-	463	673	-	308	722	-
Stage 1	-	-	-	-	-	-	710	794	-	923	840	-
Stage 2	-	-	-	-	-	-	551	793	-	342	803	-

Approach	EB	WB	NB	SB
HCM Control Delay, s	6.6	0.4	18.4	13.7
HCM LOS			C	B

Minor Lane/Major Mvmt	NBLn1	EBL	EBT	EBR	WBL	WBT	WBR	SBLn1
Capacity (veh/h)	673	1473	-	-	1615	-	-	601
HCM Lane V/C Ratio	0.611	0.026	-	-	0.003	-	-	0.31
HCM Control Delay (s)	18.4	7.5	0	-	7.2	0	-	13.7
HCM Lane LOS	C	A	A	-	A	A	-	B
HCM 95th %tile Q(veh)	4.2	0.1	-	-	0	-	-	1.3

Intersection	
Int Delay, s/veh	5.4

Movement	EBL	EBT	EBR	WBL	WBT	WBR	NBL	NBT	NBR	SBL	SBT	SBR
Lane Configurations												
Traffic Vol, veh/h	4	11	0	1	3	9	0	2	8	19	3	1
Future Vol, veh/h	4	11	0	1	3	9	0	2	8	19	3	1
Conflicting Peds, #/hr	0	0	0	0	0	0	0	0	0	0	0	0
Sign Control	Free	Free	Free	Free	Free	Free	Stop	Stop	Stop	Stop	Stop	Stop
RT Channelized	-	-	None	-	-	None	-	-	None	-	-	None
Storage Length	-	-	-	-	-	-	-	-	-	-	-	-
Veh in Median Storage, #	-	0	-	-	0	-	-	0	-	-	0	-
Grade, %	-	0	-	-	0	-	-	0	-	-	0	-
Peak Hour Factor	77	77	77	77	77	77	77	77	77	77	77	77
Heavy Vehicles, %	2	2	2	100	33	20	2	50	2	2	2	2
Mvmt Flow	5	14	0	1	4	12	0	3	10	25	4	1

Major/Minor	Major1			Major2			Minor1			Minor2		
Conflicting Flow All	16	0	0	14	0	0	39	42	14	43	36	10
Stage 1	-	-	-	-	-	-	24	24	-	12	12	-
Stage 2	-	-	-	-	-	-	15	18	-	31	24	-
Critical Hdwy	4.12	-	-	5.1	-	-	7.12	7	6.22	7.12	6.52	6.22
Critical Hdwy Stg 1	-	-	-	-	-	-	6.12	6	-	6.12	5.52	-
Critical Hdwy Stg 2	-	-	-	-	-	-	6.12	6	-	6.12	5.52	-
Follow-up Hdwy	2.218	-	-	3.1	-	-	3.518	4.45	3.318	3.518	4.018	3.318
Pot Cap-1 Maneuver	1602	-	-	1145	-	-	966	765	1066	960	856	1071
Stage 1	-	-	-	-	-	-	994	789	-	1009	886	-
Stage 2	-	-	-	-	-	-	1005	794	-	986	875	-
Platoon blocked, %		-	-		-	-						
Mov Cap-1 Maneuver	1602	-	-	1145	-	-	958	762	1066	946	853	1071
Mov Cap-2 Maneuver	-	-	-	-	-	-	958	762	-	946	853	-
Stage 1	-	-	-	-	-	-	991	787	-	1006	885	-
Stage 2	-	-	-	-	-	-	998	793	-	970	872	-

Approach	EB	WB	NB	SB
HCM Control Delay, s	1.9	0.6	8.7	9
HCM LOS			A	A

Minor Lane/Major Mvmt	NBLn1	EBL	EBT	EBR	WBL	WBT	WBR	SBLn1
Capacity (veh/h)	987	1602	-	-	1145	-	-	937
HCM Lane V/C Ratio	0.013	0.003	-	-	0.001	-	-	0.032
HCM Control Delay (s)	8.7	7.3	0	-	8.1	0	-	9
HCM Lane LOS	A	A	A	-	A	A	-	A
HCM 95th %tile Q(veh)	0	0	-	-	0	-	-	0.1

Intersection	
Int Delay, s/veh	0.6

Movement	EBL	EBT	EBR	WBL	WBT	WBR	NBL	NBT	NBR	SBL	SBT	SBR
Lane Configurations												
Traffic Vol, veh/h	15	0	17	1	0	4	10	358	0	1	366	4
Future Vol, veh/h	15	0	17	1	0	4	10	358	0	1	366	4
Conflicting Peds, #/hr	0	0	0	0	0	0	0	0	0	0	0	0
Sign Control	Stop	Stop	Stop	Stop	Stop	Stop	Free	Free	Free	Free	Free	Free
RT Channelized	-	-	Stop	-	-	Stop	-	-	None	-	-	None
Storage Length	-	-	-	-	-	-	610	-	600	565	-	550
Veh in Median Storage, #	-	0	-	-	0	-	-	0	-	-	0	-
Grade, %	-	0	-	-	0	-	-	0	-	-	0	-
Peak Hour Factor	90	90	90	90	90	90	90	90	90	90	90	90
Heavy Vehicles, %	7	2	2	2	2	2	33	13	2	2	15	25
Mvmt Flow	17	0	19	1	0	4	11	398	0	1	407	4

Major/Minor	Minor2			Minor1			Major1			Major2		
Conflicting Flow All	630	829	204	626	833	199	411	0	0	398	0	0
Stage 1	409	409	-	420	420	-	-	-	-	-	-	-
Stage 2	221	420	-	206	413	-	-	-	-	-	-	-
Critical Hdwy	7.64	6.54	6.94	7.54	6.54	6.94	4.76	-	-	4.14	-	-
Critical Hdwy Stg 1	6.64	5.54	-	6.54	5.54	-	-	-	-	-	-	-
Critical Hdwy Stg 2	6.64	5.54	-	6.54	5.54	-	-	-	-	-	-	-
Follow-up Hdwy	3.57	4.02	3.32	3.52	4.02	3.32	2.53	-	-	2.22	-	-
Pot Cap-1 Maneuver	356	305	803	369	303	809	951	-	-	1157	-	-
Stage 1	577	594	-	581	588	-	-	-	-	-	-	-
Stage 2	747	588	-	777	592	-	-	-	-	-	-	-
Platoon blocked, %								-	-		-	-
Mov Cap-1 Maneuver	351	301	803	357	299	809	951	-	-	1157	-	-
Mov Cap-2 Maneuver	351	301	-	357	299	-	-	-	-	-	-	-
Stage 1	570	593	-	574	581	-	-	-	-	-	-	-
Stage 2	734	581	-	758	591	-	-	-	-	-	-	-

Approach	EB	WB	NB	SB
HCM Control Delay, s	10	8.6	0.2	0
HCM LOS	B	A		

Minor Lane/Major Mvmt	NBL	NBT	NBR	EBLn1	WBLn1	SBL	SBT	SBR
Capacity (veh/h)	951	-	-	749	1011	1157	-	-
HCM Lane V/C Ratio	0.012	-	-	0.047	0.005	0.001	-	-
HCM Control Delay (s)	8.8	-	-	10	8.6	8.1	-	-
HCM Lane LOS	A	-	-	B	A	A	-	-
HCM 95th %tile Q(veh)	0	-	-	0.1	0	0	-	-

MOVEMENT SUMMARY

Site: 1 [1. SR 124 / US Highway 12 Westbound Ramp (2025-PM-With_Phase_1_Both_Projects) (Site Folder: 2025-PM-With_Phase_1_Both_Projects)]

SR 124 / US Highway 12 Westbound Ramp
Site Category: (None)
Roundabout

Vehicle Movement Performance

Mov ID	Turn	INPUT VOLUMES [Total veh/h	HV] %	DEMAND FLOWS [Total veh/h	HV] %	Deg. Satn v/c	Aver. Delay sec	Level of Service	95% BACK OF QUEUE [Veh. veh	Dist] ft	Prop. Que	Effective Stop Rate	Aver. No. Cycles	Aver. Speed mph
South: SR 124														
3u	U	3	6.0	3	6.0	0.475	11.1	LOS B	0.0	0.0	0.00	0.63	0.00	35.2
3	L2	486	4.0	565	4.0	0.475	9.1	LOS A	0.0	0.0	0.00	0.63	0.00	34.7
8	T1	267	2.0	310	2.0	0.475	4.8	LOS A	0.0	0.0	0.00	0.63	0.00	35.0
Approach		756	3.3	879	3.3	0.475	7.6	LOS A	0.0	0.0	0.00	0.63	0.00	34.8
East: US Highway 12 Westbound Ramp														
1	L2	56	11.0	65	11.0	0.131	15.5	LOS B	0.7	17.6	0.71	0.85	0.71	28.4
16	R2	5	2.0	6	2.0	0.131	10.4	LOS B	0.7	17.6	0.71	0.85	0.71	28.0
Approach		61	10.3	71	10.3	0.131	15.1	LOS B	0.7	17.6	0.71	0.85	0.71	28.4
North: SR 124														
4	T1	57	11.0	66	11.0	0.081	8.2	LOS A	0.4	10.9	0.59	0.66	0.59	34.5
14	R2	499	3.0	580	3.0	0.606	10.4	LOS B	5.4	138.2	0.76	0.92	0.96	32.7
Approach		556	3.8	647	3.8	0.606	10.2	LOS B	5.4	138.2	0.75	0.89	0.93	32.9
All Vehicles		1373	3.8	1597	3.8	0.606	9.0	LOS A	5.4	138.2	0.33	0.75	0.41	33.7

Site Level of Service (LOS) Method: Delay & Degree of Saturation (SIDRA). Site LOS Method is specified in the Parameter Settings dialog (Site tab).
Roundabout LOS Method: Same as Signalised Intersections.
Vehicle movement LOS values are based on average delay and v/c ratio (degree of saturation) per movement.
Intersection and Approach LOS values are based on average delay for all movements (v/c not used).
Roundabout Capacity Model: SIDRA Standard.
Delay Model: SIDRA Standard (Geometric Delay is included).
Queue Model: HCM Queue Formula.
Gap-Acceptance Capacity: SIDRA Standard (Akçelik M3D).
HV (%) values are calculated for All Movement Classes of All Heavy Vehicle Model Designation.

MOVEMENT SUMMARY

Site: 1 [2. SR 124 and 5th Avenue / Gateway Road and US Highway 12 Eastbound Ramp (2025-PM- With_Phase_1_Both (Site Folder: 2025-PM- With_Phase_1_Both_Projects)]

SR 124 and 5th Avenue / Gateway Road and US Highway 12 Eastbound Ramp
Site Category: (None)
Roundabout

Vehicle Movement Performance

Mov ID	Turn	INPUT VOLUMES [Total veh/h	HV] %	DEMAND FLOWS [Total veh/h	HV] %	Deg. Satn v/c	Aver. Delay sec	Level of Service	95% BACK OF QUEUE [Veh. veh	Dist] ft	Prop. Que	Effective Stop Rate	Aver. No. Cycles	Aver. Speed mph
South: 5th Avenue														
3	L2	3	2.0	3	2.0	0.526	6.5	LOS A	3.9	99.6	0.45	0.38	0.45	24.7
8	T1	446	2.0	474	2.0	0.526	2.5	LOS A	3.9	99.6	0.45	0.38	0.45	24.5
18	R2	83	2.0	88	2.0	0.526	3.1	LOS A	3.9	99.6	0.45	0.38	0.45	24.1
Approach		532	2.0	566	2.0	0.526	2.6	LOS A	3.9	99.6	0.45	0.38	0.45	24.5
East: US Highway 12 Westbound Ramp														
1	L2	508	2.0	540	2.0	0.640	12.9	LOS B	5.7	145.3	0.77	0.95	0.95	29.5
6	T1	61	7.0	65	7.0	0.640	8.9	LOS A	5.7	145.3	0.77	0.95	0.95	29.5
16	R2	209	6.0	222	6.0	0.640	4.0	LOS A	5.7	145.3	0.07	0.52	0.09	32.3
Approach		778	3.5	828	3.5	0.640	10.2	LOS B	5.7	145.3	0.58	0.84	0.72	30.2
North: SR 124														
7	L2	4	25.0	4	25.0	0.188	12.9	LOS B	1.0	25.2	0.64	0.75	0.64	33.6
4	T1	105	4.0	112	4.0	0.188	7.6	LOS A	1.0	25.2	0.64	0.75	0.64	34.6
14	R2	13	17.0	14	17.0	0.188	8.1	LOS A	1.0	25.2	0.64	0.75	0.64	33.4
Approach		122	6.1	130	6.1	0.188	7.8	LOS A	1.0	25.2	0.64	0.75	0.64	34.4
West: Gateway Road														
5	L2	91	4.0	97	4.0	0.189	9.5	LOS A	1.0	26.7	0.69	0.79	0.69	23.4
2	T1	17	2.0	18	2.0	0.189	5.4	LOS A	1.0	26.7	0.69	0.79	0.69	23.3
12	R2	7	2.0	7	2.0	0.189	5.9	LOS A	1.0	26.7	0.69	0.79	0.69	22.9
Approach		115	3.6	122	3.6	0.189	8.7	LOS A	1.0	26.7	0.69	0.79	0.69	23.4
All Vehicles		1547	3.2	1646	3.2	0.640	7.3	LOS A	5.7	145.3	0.55	0.67	0.62	27.6

Site Level of Service (LOS) Method: Delay & Degree of Saturation (SIDRA). Site LOS Method is specified in the Parameter Settings dialog (Site tab).
Roundabout LOS Method: Same as Signalised Intersections.
Vehicle movement LOS values are based on average delay and v/c ratio (degree of saturation) per movement.
Intersection and Approach LOS values are based on average delay for all movements (v/c not used).
Roundabout Capacity Model: SIDRA Standard.
Delay Model: SIDRA Standard (Geometric Delay is included).
Queue Model: HCM Queue Formula.
Gap-Acceptance Capacity: SIDRA Standard (Akçelik M3D).
HV (%) values are calculated for All Movement Classes of All Heavy Vehicle Model Designation.

Intersection	
Int Delay, s/veh	14.7

Movement	EBL	EBT	EBR	WBL	WBT	WBR	NBL	NBT	NBR	SBL	SBT	SBR
Lane Configurations												
Traffic Vol, veh/h	0	0	0	21	0	420	0	109	12	483	144	0
Future Vol, veh/h	0	0	0	21	0	420	0	109	12	483	144	0
Conflicting Peds, #/hr	0	0	0	0	0	0	0	0	0	0	0	0
Sign Control	Stop	Stop	Stop	Stop	Stop	Stop	Free	Free	Free	Free	Free	Free
RT Channelized	-	-	None	-	-	None	-	-	None	-	-	None
Storage Length	-	-	-	-	-	-	-	-	-	-	-	-
Veh in Median Storage, #	-	0	-	-	0	-	-	0	-	-	0	-
Grade, %	-	0	-	-	0	-	-	0	-	-	0	-
Peak Hour Factor	89	89	89	89	89	89	89	89	89	89	89	89
Heavy Vehicles, %	2	2	2	2	2	3	2	2	2	2	3	2
Mvmt Flow	0	0	0	24	0	472	0	122	13	543	162	0

Major/Minor	Minor2			Minor1			Major1			Major2		
Conflicting Flow All	1613	1383	162	1377	1377	129	162	0	0	135	0	0
Stage 1	1248	1248	-	129	129	-	-	-	-	-	-	-
Stage 2	365	135	-	1248	1248	-	-	-	-	-	-	-
Critical Hdwy	7.12	6.52	6.22	7.12	6.52	6.23	4.12	-	-	4.12	-	-
Critical Hdwy Stg 1	6.12	5.52	-	6.12	5.52	-	-	-	-	-	-	-
Critical Hdwy Stg 2	6.12	5.52	-	6.12	5.52	-	-	-	-	-	-	-
Follow-up Hdwy	3.518	4.018	3.318	3.518	4.018	3.327	2.218	-	-	2.218	-	-
Pot Cap-1 Maneuver	84	144	883	122	145	918	1417	-	-	1449	-	-
Stage 1	212	245	-	875	789	-	-	-	-	-	-	-
Stage 2	654	785	-	212	245	-	-	-	-	-	-	-
Platoon blocked, %								-	-		-	-
Mov Cap-1 Maneuver	28	85	883	83	85	918	1417	-	-	1449	-	-
Mov Cap-2 Maneuver	28	85	-	83	85	-	-	-	-	-	-	-
Stage 1	212	144	-	875	789	-	-	-	-	-	-	-
Stage 2	318	785	-	125	144	-	-	-	-	-	-	-

Approach	EB	WB	NB	SB
HCM Control Delay, s	0	29.7	0	6.9
HCM LOS	A	D		

Minor Lane/Major Mvmt	NBL	NBT	NBR	EBLn1	WBLn1	SBL	SBT	SBR
Capacity (veh/h)	1417	-	-	-	621	1449	-	-
HCM Lane V/C Ratio	-	-	-	-	0.798	0.375	-	-
HCM Control Delay (s)	0	-	-	0	29.7	9	0	-
HCM Lane LOS	A	-	-	A	D	A	A	-
HCM 95th %tile Q(veh)	0	-	-	-	7.9	1.8	-	-

Intersection	
Int Delay, s/veh	13.4

Movement	EBL	EBT	EBR	WBL	WBT	WBR	NBL	NBT	NBR	SBL	SBT	SBR
Lane Configurations												
Traffic Vol, veh/h	7	3	7	8	4	28	2	184	3	51	330	16
Future Vol, veh/h	7	3	7	8	4	28	2	184	3	51	330	16
Conflicting Peds, #/hr	0	0	0	0	0	0	0	0	0	0	0	0
Sign Control	Free	Free	Free	Free	Free	Free	Stop	Stop	Stop	Stop	Stop	Stop
RT Channelized	-	-	None	-	-	None	-	-	None	-	-	None
Storage Length	-	-	-	-	-	-	-	-	-	-	-	-
Veh in Median Storage, #	-	0	-	-	0	-	-	0	-	-	0	-
Grade, %	-	0	-	-	0	-	-	0	-	-	0	-
Peak Hour Factor	85	85	85	85	85	85	85	85	85	85	85	85
Heavy Vehicles, %	2	2	2	14	2	2	2	2	2	2	2	2
Mvmt Flow	8	4	8	9	5	33	2	216	4	60	388	19

Major/Minor	Major1			Major2			Minor1			Minor2		
Conflicting Flow All	38	0	0	12	0	0	267	80	8	174	68	22
Stage 1	-	-	-	-	-	-	24	24	-	40	40	-
Stage 2	-	-	-	-	-	-	243	56	-	134	28	-
Critical Hdwy	4.12	-	-	4.24	-	-	7.12	6.52	6.22	7.12	6.52	6.22
Critical Hdwy Stg 1	-	-	-	-	-	-	6.12	5.52	-	6.12	5.52	-
Critical Hdwy Stg 2	-	-	-	-	-	-	6.12	5.52	-	6.12	5.52	-
Follow-up Hdwy	2.218	-	-	2.326	-	-	3.518	4.018	3.318	3.518	4.018	3.318
Pot Cap-1 Maneuver	1572	-	-	1532	-	-	686	810	1074	789	823	1055
Stage 1	-	-	-	-	-	-	994	875	-	975	862	-
Stage 2	-	-	-	-	-	-	761	848	-	869	872	-
Platoon blocked, %		-	-		-	-						
Mov Cap-1 Maneuver	1572	-	-	1532	-	-	418	801	1074	617	814	1055
Mov Cap-2 Maneuver	-	-	-	-	-	-	418	801	-	617	814	-
Stage 1	-	-	-	-	-	-	989	871	-	970	857	-
Stage 2	-	-	-	-	-	-	406	843	-	648	868	-

Approach	EB	WB	NB	SB
HCM Control Delay, s	3	1.5	11.3	16
HCM LOS			B	C

Minor Lane/Major Mvmt	NBLn1	EBL	EBT	EBR	WBL	WBT	WBR	SBLn1
Capacity (veh/h)	796	1572	-	-	1532	-	-	789
HCM Lane V/C Ratio	0.279	0.005	-	-	0.006	-	-	0.592
HCM Control Delay (s)	11.3	7.3	0	-	7.4	0	-	16
HCM Lane LOS	B	A	A	-	A	A	-	C
HCM 95th %tile Q(veh)	1.1	0	-	-	0	-	-	4

Intersection	
Int Delay, s/veh	3.6

Movement	EBL	EBT	EBR	WBL	WBT	WBR	NBL	NBT	NBR	SBL	SBT	SBR
Lane Configurations												
Traffic Vol, veh/h	1	9	0	14	21	28	0	2	3	17	5	1
Future Vol, veh/h	1	9	0	14	21	28	0	2	3	17	5	1
Conflicting Peds, #/hr	0	0	0	0	0	0	0	0	0	0	0	0
Sign Control	Free	Free	Free	Free	Free	Free	Stop	Stop	Stop	Stop	Stop	Stop
RT Channelized	-	-	None	-	-	None	-	-	None	-	-	None
Storage Length	-	-	-	-	-	-	-	-	-	-	-	-
Veh in Median Storage, #	-	0	-	-	0	-	-	0	-	-	0	-
Grade, %	-	0	-	-	0	-	-	0	-	-	0	-
Peak Hour Factor	86	86	86	86	86	86	86	86	86	86	86	86
Heavy Vehicles, %	2	11	2	2	5	2	2	2	2	2	2	2
Mvmt Flow	1	10	0	16	24	33	0	2	3	20	6	1

Major/Minor	Major1			Major2			Minor1			Minor2		
Conflicting Flow All	57	0	0	10	0	0	88	101	10	88	85	41
Stage 1	-	-	-	-	-	-	12	12	-	73	73	-
Stage 2	-	-	-	-	-	-	76	89	-	15	12	-
Critical Hdwy	4.12	-	-	4.12	-	-	7.12	6.52	6.22	7.12	6.52	6.22
Critical Hdwy Stg 1	-	-	-	-	-	-	6.12	5.52	-	6.12	5.52	-
Critical Hdwy Stg 2	-	-	-	-	-	-	6.12	5.52	-	6.12	5.52	-
Follow-up Hdwy	2.218	-	-	2.218	-	-	3.518	4.018	3.318	3.518	4.018	3.318
Pot Cap-1 Maneuver	1547	-	-	1610	-	-	897	789	1071	897	805	1030
Stage 1	-	-	-	-	-	-	1009	886	-	937	834	-
Stage 2	-	-	-	-	-	-	933	821	-	1005	886	-
Platoon blocked, %		-	-		-	-						
Mov Cap-1 Maneuver	1547	-	-	1610	-	-	884	780	1071	884	796	1030
Mov Cap-2 Maneuver	-	-	-	-	-	-	884	780	-	884	796	-
Stage 1	-	-	-	-	-	-	1008	885	-	936	826	-
Stage 2	-	-	-	-	-	-	916	813	-	998	885	-

Approach	EB	WB	NB	SB
HCM Control Delay, s	0.7	1.6	8.9	9.3
HCM LOS			A	A

Minor Lane/Major Mvmt	NBLn1	EBL	EBT	EBR	WBL	WBT	WBR	SBLn1
Capacity (veh/h)	932	1547	-	-	1610	-	-	868
HCM Lane V/C Ratio	0.006	0.001	-	-	0.01	-	-	0.031
HCM Control Delay (s)	8.9	7.3	0	-	7.3	0	-	9.3
HCM Lane LOS	A	A	A	-	A	A	-	A
HCM 95th %tile Q(veh)	0	0	-	-	0	-	-	0.1

Intersection	
Int Delay, s/veh	0.8

Movement	EBL	EBT	EBR	WBL	WBT	WBR	NBL	NBT	NBR	SBL	SBT	SBR
Lane Configurations												
Traffic Vol, veh/h	13	2	15	3	0	4	20	1006	1	6	422	35
Future Vol, veh/h	13	2	15	3	0	4	20	1006	1	6	422	35
Conflicting Peds, #/hr	0	0	0	0	0	0	0	0	0	0	0	0
Sign Control	Stop	Stop	Stop	Stop	Stop	Stop	Free	Free	Free	Free	Free	Free
RT Channelized	-	-	Stop	-	-	Stop	-	-	None	-	-	None
Storage Length	-	-	-	-	-	-	610	-	600	565	-	550
Veh in Median Storage, #	-	0	-	-	0	-	-	0	-	-	0	-
Grade, %	-	0	-	-	0	-	-	0	-	-	0	-
Peak Hour Factor	79	79	79	79	79	79	79	79	79	79	79	79
Heavy Vehicles, %	2	2	2	2	2	2	14	6	2	17	19	6
Mvmt Flow	16	3	19	4	0	5	25	1273	1	8	534	44

Major/Minor	Minor2			Minor1			Major1			Major2		
Conflicting Flow All	1237	1874	267	1608	1917	637	578	0	0	1274	0	0
Stage 1	550	550	-	1323	1323	-	-	-	-	-	-	-
Stage 2	687	1324	-	285	594	-	-	-	-	-	-	-
Critical Hdwy	7.54	6.54	6.94	7.54	6.54	6.94	4.38	-	-	4.44	-	-
Critical Hdwy Stg 1	6.54	5.54	-	6.54	5.54	-	-	-	-	-	-	-
Critical Hdwy Stg 2	6.54	5.54	-	6.54	5.54	-	-	-	-	-	-	-
Follow-up Hdwy	3.52	4.02	3.32	3.52	4.02	3.32	2.34	-	-	2.37	-	-
Pot Cap-1 Maneuver	132	71	731	70	67	420	913	-	-	466	-	-
Stage 1	487	514	-	165	224	-	-	-	-	-	-	-
Stage 2	403	224	-	698	491	-	-	-	-	-	-	-
Platoon blocked, %								-	-		-	-
Mov Cap-1 Maneuver	126	68	731	64	64	420	913	-	-	466	-	-
Mov Cap-2 Maneuver	126	68	-	64	64	-	-	-	-	-	-	-
Stage 1	474	505	-	161	218	-	-	-	-	-	-	-
Stage 2	387	218	-	665	483	-	-	-	-	-	-	-

Approach	EB	WB	NB	SB
HCM Control Delay, s	24.1	30.7	0.2	0.2
HCM LOS	C	D		

Minor Lane/Major Mvmt	NBL	NBT	NBR	EBLn1	WBLn1	SBL	SBT	SBR
Capacity (veh/h)	913	-	-	226	149	466	-	-
HCM Lane V/C Ratio	0.028	-	-	0.168	0.059	0.016	-	-
HCM Control Delay (s)	9.1	-	-	24.1	30.7	12.9	-	-
HCM Lane LOS	A	-	-	C	D	B	-	-
HCM 95th %tile Q(veh)	0.1	-	-	0.6	0.2	0.1	-	-

MOVEMENT SUMMARY

Site: 1 [1. SR 124 / US Highway 12 Westbound Ramp (2025-AM-With_500_Dwelling_Units) (Site Folder: 2025-AM-With_500_Dwelling_Units)]

SR 124 / US Highway 12 Westbound Ramp
Site Category: (None)
Roundabout

Vehicle Movement Performance

Mov ID	Turn	INPUT VOLUMES [Total veh/h	HV] %	DEMAND FLOWS [Total veh/h	HV] %	Deg. Satn v/c	Aver. Delay sec	Level of Service	95% BACK OF QUEUE [Veh. veh	Dist] ft	Prop. Que	Effective Stop Rate	Aver. No. Cycles	Aver. Speed mph
South: SR 124														
3u	U	1	2.0	1	2.0	0.462	11.0	LOS B	0.0	0.0	0.00	0.64	0.00	35.2
3	L2	480	9.0	578	9.0	0.462	9.2	LOS A	0.0	0.0	0.00	0.64	0.00	34.4
8	T1	192	8.0	231	8.0	0.462	4.9	LOS A	0.0	0.0	0.00	0.64	0.00	34.7
Approach		673	8.7	811	8.7	0.462	7.9	LOS A	0.0	0.0	0.00	0.64	0.00	34.5
East: US Highway 12 Westbound Ramp														
1	L2	68	9.0	82	9.0	0.160	15.1	LOS B	0.8	21.5	0.70	0.86	0.70	28.5
16	R2	6	17.0	7	17.0	0.160	11.6	LOS B	0.8	21.5	0.70	0.86	0.70	28.0
Approach		74	9.6	89	9.6	0.160	14.8	LOS B	0.8	21.5	0.70	0.86	0.70	28.5
North: SR 124														
4	T1	89	6.0	107	6.0	0.129	8.5	LOS A	0.7	17.8	0.63	0.70	0.63	34.4
14	R2	140	5.0	169	5.0	0.186	7.7	LOS A	1.0	24.8	0.59	0.72	0.59	34.0
Approach		229	5.4	276	5.4	0.186	8.0	LOS A	1.0	24.8	0.61	0.71	0.61	34.2
All Vehicles		976	8.0	1176	8.0	0.462	8.5	LOS A	1.0	24.8	0.20	0.67	0.20	33.9

Site Level of Service (LOS) Method: Delay & Degree of Saturation (SIDRA). Site LOS Method is specified in the Parameter Settings dialog (Site tab).
Roundabout LOS Method: Same as Signalised Intersections.
Vehicle movement LOS values are based on average delay and v/c ratio (degree of saturation) per movement.
Intersection and Approach LOS values are based on average delay for all movements (v/c not used).
Roundabout Capacity Model: SIDRA Standard.
Delay Model: SIDRA Standard (Geometric Delay is included).
Queue Model: HCM Queue Formula.
Gap-Acceptance Capacity: SIDRA Standard (Akçelik M3D).
HV (%) values are calculated for All Movement Classes of All Heavy Vehicle Model Designation.

MOVEMENT SUMMARY

Site: 1 [2. SR 124 and 5th Avenue / Gateway Road and US Highway 12 Eastbound Ramp (2025-AM- With_500_Dwelling (Site Folder: 2025-AM- With_500_Dwelling_Units)]

SR 124 and 5th Avenue / Gateway Road and US Highway 12 Eastbound Ramp
Site Category: (None)
Roundabout

Vehicle Movement Performance

Mov ID	Turn	INPUT VOLUMES [Total veh/h	HV] %	DEMAND FLOWS [Total veh/h	HV] %	Deg. Satn v/c	Aver. Delay sec	Level of Service	95% BACK OF QUEUE [Veh. veh	Dist] ft	Prop. Que	Effective Stop Rate	Aver. No. Cycles	Aver. Speed mph
South: 5th Avenue														
3	L2	7	2.0	8	2.0	0.546	6.5	LOS A	4.2	107.6	0.45	0.38	0.45	24.7
8	T1	460	3.0	541	3.0	0.546	2.5	LOS A	4.2	107.6	0.45	0.38	0.45	24.6
18	R2	25	33.0	29	33.0	0.546	4.7	LOS A	4.2	107.6	0.45	0.38	0.45	24.8
Approach		492	4.5	579	4.5	0.546	2.7	LOS A	4.2	107.6	0.45	0.38	0.45	24.6
East: US Highway 12 Westbound Ramp														
1	L2	350	2.0	412	2.0	0.552	12.5	LOS B	4.3	109.5	0.75	0.92	0.88	29.8
6	T1	84	2.0	99	2.0	0.552	8.2	LOS A	4.3	109.5	0.75	0.92	0.88	29.8
16	R2	148	10.0	174	10.0	0.552	3.7	LOS A	4.3	109.5	0.03	0.49	0.03	32.5
Approach		582	4.0	685	4.0	0.552	9.7	LOS A	4.3	109.5	0.57	0.81	0.67	30.4
North: SR 124														
7	L2	7	2.0	8	2.0	0.262	11.3	LOS B	1.3	35.8	0.61	0.74	0.61	34.5
4	T1	132	7.0	155	7.0	0.262	7.3	LOS A	1.3	35.8	0.61	0.74	0.61	34.6
14	R2	19	50.0	22	50.0	0.262	9.5	LOS A	1.3	35.8	0.61	0.74	0.61	32.4
Approach		158	11.9	186	11.9	0.262	7.7	LOS A	1.3	35.8	0.61	0.74	0.61	34.3
West: Gateway Road														
5	L2	64	20.0	75	20.0	0.168	9.7	LOS A	0.8	24.2	0.64	0.78	0.64	23.2
2	T1	7	100.0	8	100.0	0.168	10.7	LOS B	0.8	24.2	0.64	0.78	0.64	23.1
12	R2	6	17.0	7	17.0	0.168	6.1	LOS A	0.8	24.2	0.64	0.78	0.64	22.7
Approach		77	27.0	91	27.0	0.168	9.5	LOS A	0.8	24.2	0.64	0.78	0.64	23.2
All Vehicles		1309	6.5	1540	6.5	0.552	6.8	LOS A	4.3	109.5	0.53	0.64	0.58	27.8

Site Level of Service (LOS) Method: Delay & Degree of Saturation (SIDRA). Site LOS Method is specified in the Parameter Settings dialog (Site tab).
Roundabout LOS Method: Same as Signalised Intersections.
Vehicle movement LOS values are based on average delay and v/c ratio (degree of saturation) per movement.
Intersection and Approach LOS values are based on average delay for all movements (v/c not used).
Roundabout Capacity Model: SIDRA Standard.
Delay Model: SIDRA Standard (Geometric Delay is included).
Queue Model: HCM Queue Formula.
Gap-Acceptance Capacity: SIDRA Standard (Akçelik M3D).
HV (%) values are calculated for All Movement Classes of All Heavy Vehicle Model Designation.

Intersection	
Int Delay, s/veh	8.5

Movement	EBL	EBT	EBR	WBL	WBT	WBR	NBL	NBT	NBR	SBL	SBT	SBR
Lane Configurations												
Traffic Vol, veh/h	0	0	0	6	0	371	0	133	11	308	183	0
Future Vol, veh/h	0	0	0	6	0	371	0	133	11	308	183	0
Conflicting Peds, #/hr	0	0	0	0	0	0	0	0	0	0	0	0
Sign Control	Stop	Stop	Stop	Stop	Stop	Stop	Free	Free	Free	Free	Free	Free
RT Channelized	-	-	None	-	-	None	-	-	None	-	-	None
Storage Length	-	-	-	-	-	-	-	-	-	-	-	-
Veh in Median Storage, #	-	0	-	-	0	-	-	0	-	-	0	-
Grade, %	-	0	-	-	0	-	-	0	-	-	0	-
Peak Hour Factor	81	81	81	81	81	81	81	81	81	81	81	81
Heavy Vehicles, %	2	2	2	2	2	8	2	2	2	6	2	2
Mvmt Flow	0	0	0	7	0	458	0	164	14	380	226	0

Major/Minor	Minor2			Minor1			Major1			Major2		
Conflicting Flow All	1386	1164	226	1157	1157	171	226	0	0	178	0	0
Stage 1	986	986	-	171	171	-	-	-	-	-	-	-
Stage 2	400	178	-	986	986	-	-	-	-	-	-	-
Critical Hdwy	7.12	6.52	6.22	7.12	6.52	6.28	4.12	-	-	4.16	-	-
Critical Hdwy Stg 1	6.12	5.52	-	6.12	5.52	-	-	-	-	-	-	-
Critical Hdwy Stg 2	6.12	5.52	-	6.12	5.52	-	-	-	-	-	-	-
Follow-up Hdwy	3.518	4.018	3.318	3.518	4.018	3.372	2.218	-	-	2.254	-	-
Pot Cap-1 Maneuver	120	194	813	173	196	857	1342	-	-	1374	-	-
Stage 1	298	326	-	831	757	-	-	-	-	-	-	-
Stage 2	626	752	-	298	326	-	-	-	-	-	-	-
Platoon blocked, %								-	-		-	-
Mov Cap-1 Maneuver	42	133	813	131	134	857	1342	-	-	1374	-	-
Mov Cap-2 Maneuver	42	133	-	131	134	-	-	-	-	-	-	-
Stage 1	298	223	-	831	757	-	-	-	-	-	-	-
Stage 2	291	752	-	204	223	-	-	-	-	-	-	-

Approach	EB	WB	NB	SB
HCM Control Delay, s	0	15.9	0	5.4
HCM LOS	A	C		

Minor Lane/Major Mvmt	NBL	NBT	NBR	EBLn1	WBLn1	SBL	SBT	SBR
Capacity (veh/h)	1342	-	-	-	788	1374	-	-
HCM Lane V/C Ratio	-	-	-	-	0.591	0.277	-	-
HCM Control Delay (s)	0	-	-	0	15.9	8.6	0	-
HCM Lane LOS	A	-	-	A	C	A	A	-
HCM 95th %tile Q(veh)	0	-	-	-	3.9	1.1	-	-

Intersection	
Int Delay, s/veh	16.8

Movement	EBL	EBT	EBR	WBL	WBT	WBR	NBL	NBT	NBR	SBL	SBT	SBR
Lane Configurations												
Traffic Vol, veh/h	38	2	2	5	3	74	2	314	2	25	111	11
Future Vol, veh/h	38	2	2	5	3	74	2	314	2	25	111	11
Conflicting Peds, #/hr	0	0	0	0	0	0	0	0	0	0	0	0
Sign Control	Free	Free	Free	Free	Free	Free	Stop	Stop	Stop	Stop	Stop	Stop
RT Channelized	-	-	None	-	-	None	-	-	None	-	-	None
Storage Length	-	-	-	-	-	-	-	-	-	-	-	-
Veh in Median Storage, #	-	0	-	-	0	-	-	0	-	-	0	-
Grade, %	-	0	-	-	0	-	-	0	-	-	0	-
Peak Hour Factor	72	72	72	72	72	72	72	72	72	72	72	72
Heavy Vehicles, %	6	2	2	2	2	5	100	7	2	2	2	2
Mvmt Flow	53	3	3	7	4	103	3	436	3	35	154	15

Major/Minor	Major1			Major2			Minor1			Minor2		
Conflicting Flow All	107	0	0	6	0	0	265	232	5	400	182	56
Stage 1	-	-	-	-	-	-	111	111	-	70	70	-
Stage 2	-	-	-	-	-	-	154	121	-	330	112	-
Critical Hdwy	4.16	-	-	4.12	-	-	8.1	6.57	6.22	7.12	6.52	6.22
Critical Hdwy Stg 1	-	-	-	-	-	-	7.1	5.57	-	6.12	5.52	-
Critical Hdwy Stg 2	-	-	-	-	-	-	7.1	5.57	-	6.12	5.52	-
Follow-up Hdwy	2.254	-	-	2.218	-	-	4.4	4.063	3.318	3.518	4.018	3.318
Pot Cap-1 Maneuver	1459	-	-	1615	-	-	528	659	1078	560	712	1011
Stage 1	-	-	-	-	-	-	703	794	-	940	837	-
Stage 2	-	-	-	-	-	-	662	786	-	683	803	-
Platoon blocked, %		-	-		-	-						
Mov Cap-1 Maneuver	1459	-	-	1615	-	-	417	632	1078	240	683	1011
Mov Cap-2 Maneuver	-	-	-	-	-	-	417	632	-	240	683	-
Stage 1	-	-	-	-	-	-	678	765	-	906	833	-
Stage 2	-	-	-	-	-	-	529	782	-	282	774	-

Approach	EB	WB	NB	SB
HCM Control Delay, s	6.8	0.4	22.8	16
HCM LOS			C	C

Minor Lane/Major Mvmt	NBLn1	EBL	EBT	EBR	WBL	WBT	WBR	SBLn1
Capacity (veh/h)	632	1459	-	-	1615	-	-	530
HCM Lane V/C Ratio	0.699	0.036	-	-	0.004	-	-	0.385
HCM Control Delay (s)	22.8	7.6	0	-	7.2	0	-	16
HCM Lane LOS	C	A	A	-	A	A	-	C
HCM 95th %tile Q(veh)	5.6	0.1	-	-	0	-	-	1.8

Intersection	
Int Delay, s/veh	5.4

Movement	EBL	EBT	EBR	WBL	WBT	WBR	NBL	NBT	NBR	SBL	SBT	SBR
Lane Configurations												
Traffic Vol, veh/h	5	12	0	1	3	10	0	2	8	21	3	1
Future Vol, veh/h	5	12	0	1	3	10	0	2	8	21	3	1
Conflicting Peds, #/hr	0	0	0	0	0	0	0	0	0	0	0	0
Sign Control	Free	Free	Free	Free	Free	Free	Stop	Stop	Stop	Stop	Stop	Stop
RT Channelized	-	-	None	-	-	None	-	-	None	-	-	None
Storage Length	-	-	-	-	-	-	-	-	-	-	-	-
Veh in Median Storage, #	-	0	-	-	0	-	-	0	-	-	0	-
Grade, %	-	0	-	-	0	-	-	0	-	-	0	-
Peak Hour Factor	77	77	77	77	77	77	77	77	77	77	77	77
Heavy Vehicles, %	2	2	2	100	33	20	2	50	2	2	2	2
Mvmt Flow	6	16	0	1	4	13	0	3	10	27	4	1

Major/Minor	Major1			Major2			Minor1			Minor2		
Conflicting Flow All	17	0	0	16	0	0	43	47	16	48	41	11
Stage 1	-	-	-	-	-	-	28	28	-	13	13	-
Stage 2	-	-	-	-	-	-	15	19	-	35	28	-
Critical Hdwy	4.12	-	-	5.1	-	-	7.12	7	6.22	7.12	6.52	6.22
Critical Hdwy Stg 1	-	-	-	-	-	-	6.12	6	-	6.12	5.52	-
Critical Hdwy Stg 2	-	-	-	-	-	-	6.12	6	-	6.12	5.52	-
Follow-up Hdwy	2.218	-	-	3.1	-	-	3.518	4.45	3.318	3.518	4.018	3.318
Pot Cap-1 Maneuver	1600	-	-	1143	-	-	960	760	1063	953	851	1070
Stage 1	-	-	-	-	-	-	989	786	-	1007	885	-
Stage 2	-	-	-	-	-	-	1005	793	-	981	872	-
Platoon blocked, %		-	-		-	-						
Mov Cap-1 Maneuver	1600	-	-	1143	-	-	951	756	1063	938	847	1070
Mov Cap-2 Maneuver	-	-	-	-	-	-	951	756	-	938	847	-
Stage 1	-	-	-	-	-	-	985	783	-	1003	884	-
Stage 2	-	-	-	-	-	-	998	792	-	964	869	-

Approach	EB	WB	NB	SB
HCM Control Delay, s	2.1	0.6	8.7	9
HCM LOS			A	A

Minor Lane/Major Mvmt	NBLn1	EBL	EBT	EBR	WBL	WBT	WBR	SBLn1
Capacity (veh/h)	983	1600	-	-	1143	-	-	931
HCM Lane V/C Ratio	0.013	0.004	-	-	0.001	-	-	0.035
HCM Control Delay (s)	8.7	7.3	0	-	8.2	0	-	9
HCM Lane LOS	A	A	A	-	A	A	-	A
HCM 95th %tile Q(veh)	0	0	-	-	0	-	-	0.1

Intersection	
Int Delay, s/veh	0.6

Movement	EBL	EBT	EBR	WBL	WBT	WBR	NBL	NBT	NBR	SBL	SBT	SBR
Lane Configurations												
Traffic Vol, veh/h	17	0	19	1	0	5	11	441	0	5	413	5
Future Vol, veh/h	17	0	19	1	0	5	11	441	0	5	413	5
Conflicting Peds, #/hr	0	0	0	0	0	0	0	0	0	0	0	0
Sign Control	Stop	Stop	Stop	Stop	Stop	Stop	Free	Free	Free	Free	Free	Free
RT Channelized	-	-	Stop	-	-	Stop	-	-	None	-	-	None
Storage Length	-	-	-	-	-	-	610	-	600	565	-	550
Veh in Median Storage, #	-	0	-	-	0	-	-	0	-	-	0	-
Grade, %	-	0	-	-	0	-	-	0	-	-	0	-
Peak Hour Factor	90	90	90	90	90	90	90	90	90	90	90	90
Heavy Vehicles, %	7	2	2	2	2	2	33	13	2	2	15	25
Mvmt Flow	19	0	21	1	0	6	12	490	0	6	459	6

Major/Minor	Minor2			Minor1			Major1			Major2		
Conflicting Flow All	740	985	230	756	991	245	465	0	0	490	0	0
Stage 1	471	471	-	514	514	-	-	-	-	-	-	-
Stage 2	269	514	-	242	477	-	-	-	-	-	-	-
Critical Hdwy	7.64	6.54	6.94	7.54	6.54	6.94	4.76	-	-	4.14	-	-
Critical Hdwy Stg 1	6.64	5.54	-	6.54	5.54	-	-	-	-	-	-	-
Critical Hdwy Stg 2	6.64	5.54	-	6.54	5.54	-	-	-	-	-	-	-
Follow-up Hdwy	3.57	4.02	3.32	3.52	4.02	3.32	2.53	-	-	2.22	-	-
Pot Cap-1 Maneuver	296	247	772	297	245	755	902	-	-	1070	-	-
Stage 1	529	558	-	511	534	-	-	-	-	-	-	-
Stage 2	700	534	-	740	554	-	-	-	-	-	-	-
Platoon blocked, %								-	-		-	-
Mov Cap-1 Maneuver	289	242	772	285	240	755	902	-	-	1070	-	-
Mov Cap-2 Maneuver	289	242	-	285	240	-	-	-	-	-	-	-
Stage 1	522	555	-	504	527	-	-	-	-	-	-	-
Stage 2	686	527	-	716	551	-	-	-	-	-	-	-

Approach	EB	WB	NB	SB
HCM Control Delay, s	11.3	9	0.2	0.1
HCM LOS	B	A		

Minor Lane/Major Mvmt	NBL	NBT	NBR	EBLn1	WBLn1	SBL	SBT	SBR
Capacity (veh/h)	902	-	-	612	906	1070	-	-
HCM Lane V/C Ratio	0.014	-	-	0.065	0.007	0.005	-	-
HCM Control Delay (s)	9	-	-	11.3	9	8.4	-	-
HCM Lane LOS	A	-	-	B	A	A	-	-
HCM 95th %tile Q(veh)	0	-	-	0.2	0	0	-	-

MOVEMENT SUMMARY

Site: 1 [1. SR 124 / US Highway 12 Westbound Ramp (2025-PM-With_500_Dwelling_Units) (Site Folder: 2025-PM-With_500_Dwelling_Units)]

SR 124 / US Highway 12 Westbound Ramp
Site Category: (None)
Roundabout

Vehicle Movement Performance

Mov ID	Turn	INPUT VOLUMES [Total veh/h	HV] %	DEMAND FLOWS [Total veh/h	HV] %	Deg. Satn v/c	Aver. Delay sec	Level of Service	95% BACK OF QUEUE [Veh. veh	Dist] ft	Prop. Que	Effective Stop Rate	Aver. No. Cycles	Aver. Speed mph
South: SR 124														
3u	U	3	6.0	3	6.0	0.480	11.1	LOS B	0.0	0.0	0.00	0.63	0.00	35.2
3	L2	493	4.0	573	4.0	0.480	9.1	LOS A	0.0	0.0	0.00	0.63	0.00	34.7
8	T1	267	2.0	310	2.0	0.480	4.8	LOS A	0.0	0.0	0.00	0.63	0.00	35.0
Approach		763	3.3	887	3.3	0.480	7.6	LOS A	0.0	0.0	0.00	0.63	0.00	34.8
East: US Highway 12 Westbound Ramp														
1	L2	56	11.0	65	11.0	0.132	15.7	LOS B	0.7	17.8	0.71	0.85	0.71	28.3
16	R2	5	2.0	6	2.0	0.132	10.5	LOS B	0.7	17.8	0.71	0.85	0.71	28.0
Approach		61	10.3	71	10.3	0.132	15.3	LOS B	0.7	17.8	0.71	0.85	0.71	28.3
North: SR 124														
4	T1	58	11.0	67	11.0	0.083	8.3	LOS A	0.4	11.2	0.60	0.67	0.60	34.4
14	R2	499	3.0	580	3.0	0.609	10.6	LOS B	5.5	140.3	0.77	0.93	0.98	32.6
Approach		557	3.8	648	3.8	0.609	10.4	LOS B	5.5	140.3	0.75	0.90	0.94	32.8
All Vehicles		1381	3.8	1606	3.8	0.609	9.1	LOS A	5.5	140.3	0.33	0.75	0.41	33.7

Site Level of Service (LOS) Method: Delay & Degree of Saturation (SIDRA). Site LOS Method is specified in the Parameter Settings dialog (Site tab).
Roundabout LOS Method: Same as Signalised Intersections.
Vehicle movement LOS values are based on average delay and v/c ratio (degree of saturation) per movement.
Intersection and Approach LOS values are based on average delay for all movements (v/c not used).
Roundabout Capacity Model: SIDRA Standard.
Delay Model: SIDRA Standard (Geometric Delay is included).
Queue Model: HCM Queue Formula.
Gap-Acceptance Capacity: SIDRA Standard (Akçelik M3D).
HV (%) values are calculated for All Movement Classes of All Heavy Vehicle Model Designation.

MOVEMENT SUMMARY

Site: 1 [2. SR 124 and 5th Avenue / Gateway Road and US Highway 12 Eastbound Ramp (2025-PM- With_500_Dwelling (Site Folder: 2025-PM- With_500_Dwelling_Units)]

SR 124 and 5th Avenue / Gateway Road and US Highway 12 Eastbound Ramp
Site Category: (None)
Roundabout

Vehicle Movement Performance

Mov ID	Turn	INPUT VOLUMES [Total veh/h	HV] %	DEMAND FLOWS [Total veh/h	HV] %	Deg. Satn v/c	Aver. Delay sec	Level of Service	95% BACK OF QUEUE [Veh. veh	Dist] ft	Prop. Que	Effective Stop Rate	Aver. No. Cycles	Aver. Speed mph
South: 5th Avenue														
3	L2	3	2.0	3	2.0	0.533	6.5	LOS A	4.0	102.3	0.46	0.38	0.46	24.7
8	T1	453	2.0	482	2.0	0.533	2.5	LOS A	4.0	102.3	0.46	0.38	0.46	24.5
18	R2	83	2.0	88	2.0	0.533	3.1	LOS A	4.0	102.3	0.46	0.38	0.46	24.1
Approach		539	2.0	573	2.0	0.533	2.6	LOS A	4.0	102.3	0.46	0.38	0.46	24.4
East: US Highway 12 Westbound Ramp														
1	L2	521	2.0	554	2.0	0.654	13.2	LOS B	6.0	153.1	0.78	0.97	0.99	29.4
6	T1	61	7.0	65	7.0	0.654	9.2	LOS A	6.0	153.1	0.78	0.97	0.99	29.4
16	R2	209	6.0	222	6.0	0.654	3.9	LOS A	6.0	153.1	0.06	0.51	0.07	32.3
Approach		791	3.4	841	3.4	0.654	10.4	LOS B	6.0	153.1	0.59	0.85	0.74	30.1
North: SR 124														
7	L2	4	25.0	4	25.0	0.193	13.1	LOS B	1.0	26.2	0.65	0.75	0.65	33.6
4	T1	106	4.0	113	4.0	0.193	7.7	LOS A	1.0	26.2	0.65	0.75	0.65	34.6
14	R2	13	17.0	14	17.0	0.193	8.2	LOS A	1.0	26.2	0.65	0.75	0.65	33.4
Approach		123	6.1	131	6.1	0.193	7.9	LOS A	1.0	26.2	0.65	0.75	0.65	34.4
West: Gateway Road														
5	L2	91	4.0	97	4.0	0.193	9.7	LOS A	1.1	27.5	0.71	0.80	0.71	23.4
2	T1	17	2.0	18	2.0	0.193	5.6	LOS A	1.1	27.5	0.71	0.80	0.71	23.3
12	R2	7	2.0	7	2.0	0.193	6.1	LOS A	1.1	27.5	0.71	0.80	0.71	22.9
Approach		115	3.6	122	3.6	0.193	8.8	LOS A	1.1	27.5	0.71	0.80	0.71	23.3
All Vehicles		1568	3.2	1668	3.2	0.654	7.4	LOS A	6.0	153.1	0.56	0.68	0.64	27.6

Site Level of Service (LOS) Method: Delay & Degree of Saturation (SIDRA). Site LOS Method is specified in the Parameter Settings dialog (Site tab).
Roundabout LOS Method: Same as Signalised Intersections.
Vehicle movement LOS values are based on average delay and v/c ratio (degree of saturation) per movement.
Intersection and Approach LOS values are based on average delay for all movements (v/c not used).
Roundabout Capacity Model: SIDRA Standard.
Delay Model: SIDRA Standard (Geometric Delay is included).
Queue Model: HCM Queue Formula.
Gap-Acceptance Capacity: SIDRA Standard (Akçelik M3D).
HV (%) values are calculated for All Movement Classes of All Heavy Vehicle Model Designation.

Intersection	
Int Delay, s/veh	16

Movement	EBL	EBT	EBR	WBL	WBT	WBR	NBL	NBT	NBR	SBL	SBT	SBR
Lane Configurations												
Traffic Vol, veh/h	0	0	0	21	0	427	0	109	12	498	144	0
Future Vol, veh/h	0	0	0	21	0	427	0	109	12	498	144	0
Conflicting Peds, #/hr	0	0	0	0	0	0	0	0	0	0	0	0
Sign Control	Stop	Stop	Stop	Stop	Stop	Stop	Free	Free	Free	Free	Free	Free
RT Channelized	-	-	None	-	-	None	-	-	None	-	-	None
Storage Length	-	-	-	-	-	-	-	-	-	-	-	-
Veh in Median Storage, #	-	0	-	-	0	-	-	0	-	-	0	-
Grade, %	-	0	-	-	0	-	-	0	-	-	0	-
Peak Hour Factor	89	89	89	89	89	89	89	89	89	89	89	89
Heavy Vehicles, %	2	2	2	2	2	3	2	2	2	2	3	2
Mvmt Flow	0	0	0	24	0	480	0	122	13	560	162	0

Major/Minor	Minor2			Minor1			Major1			Major2		
Conflicting Flow All	1651	1417	162	1411	1411	129	162	0	0	135	0	0
Stage 1	1282	1282	-	129	129	-	-	-	-	-	-	-
Stage 2	369	135	-	1282	1282	-	-	-	-	-	-	-
Critical Hdwy	7.12	6.52	6.22	7.12	6.52	6.23	4.12	-	-	4.12	-	-
Critical Hdwy Stg 1	6.12	5.52	-	6.12	5.52	-	-	-	-	-	-	-
Critical Hdwy Stg 2	6.12	5.52	-	6.12	5.52	-	-	-	-	-	-	-
Follow-up Hdwy	3.518	4.018	3.318	3.518	4.018	3.327	2.218	-	-	2.218	-	-
Pot Cap-1 Maneuver	79	137	883	116	138	918	1417	-	-	1449	-	-
Stage 1	203	236	-	875	789	-	-	-	-	-	-	-
Stage 2	651	785	-	203	236	-	-	-	-	-	-	-
Platoon blocked, %								-	-		-	-
Mov Cap-1 Maneuver	25	79	883	77	79	918	1417	-	-	1449	-	-
Mov Cap-2 Maneuver	25	79	-	77	79	-	-	-	-	-	-	-
Stage 1	203	136	-	875	789	-	-	-	-	-	-	-
Stage 2	311	785	-	117	136	-	-	-	-	-	-	-

Approach	EB	WB	NB	SB
HCM Control Delay, s	0	33.3	0	7
HCM LOS	A	D		

Minor Lane/Major Mvmt	NBL	NBT	NBR	EBLn1	WBLn1	SBL	SBT	SBR
Capacity (veh/h)	1417	-	-	-	607	1449	-	-
HCM Lane V/C Ratio	-	-	-	-	0.829	0.386	-	-
HCM Control Delay (s)	0	-	-	0	33.3	9	0	-
HCM Lane LOS	A	-	-	A	D	A	A	-
HCM 95th %tile Q(veh)	0	-	-	-	8.7	1.9	-	-

Intersection	
Int Delay, s/veh	13.8

Movement	EBL	EBT	EBR	WBL	WBT	WBR	NBL	NBT	NBR	SBL	SBT	SBR
Lane Configurations												
Traffic Vol, veh/h	7	3	7	8	4	28	2	193	3	51	345	16
Future Vol, veh/h	7	3	7	8	4	28	2	193	3	51	345	16
Conflicting Peds, #/hr	0	0	0	0	0	0	0	0	0	0	0	0
Sign Control	Free	Free	Free	Free	Free	Free	Stop	Stop	Stop	Stop	Stop	Stop
RT Channelized	-	-	None	-	-	None	-	-	None	-	-	None
Storage Length	-	-	-	-	-	-	-	-	-	-	-	-
Veh in Median Storage, #	-	0	-	-	0	-	-	0	-	-	0	-
Grade, %	-	0	-	-	0	-	-	0	-	-	0	-
Peak Hour Factor	85	85	85	85	85	85	85	85	85	85	85	85
Heavy Vehicles, %	2	2	2	14	2	2	2	2	2	2	2	2
Mvmt Flow	8	4	8	9	5	33	2	227	4	60	406	19

Major/Minor	Major1			Major2			Minor1			Minor2		
Conflicting Flow All	38	0	0	12	0	0	276	80	8	180	68	22
Stage 1	-	-	-	-	-	-	24	24	-	40	40	-
Stage 2	-	-	-	-	-	-	252	56	-	140	28	-
Critical Hdwy	4.12	-	-	4.24	-	-	7.12	6.52	6.22	7.12	6.52	6.22
Critical Hdwy Stg 1	-	-	-	-	-	-	6.12	5.52	-	6.12	5.52	-
Critical Hdwy Stg 2	-	-	-	-	-	-	6.12	5.52	-	6.12	5.52	-
Follow-up Hdwy	2.218	-	-	2.326	-	-	3.518	4.018	3.318	3.518	4.018	3.318
Pot Cap-1 Maneuver	1572	-	-	1532	-	-	676	810	1074	782	823	1055
Stage 1	-	-	-	-	-	-	994	875	-	975	862	-
Stage 2	-	-	-	-	-	-	752	848	-	863	872	-
Platoon blocked, %		-	-		-	-						
Mov Cap-1 Maneuver	1572	-	-	1532	-	-	400	801	1074	604	814	1055
Mov Cap-2 Maneuver	-	-	-	-	-	-	400	801	-	604	814	-
Stage 1	-	-	-	-	-	-	989	871	-	970	857	-
Stage 2	-	-	-	-	-	-	386	843	-	633	868	-

Approach	EB	WB	NB	SB
HCM Control Delay, s	3	1.5	11.4	16.6
HCM LOS			B	C

Minor Lane/Major Mvmt	NBLn1	EBL	EBT	EBR	WBL	WBT	WBR	SBLn1
Capacity (veh/h)	796	1572	-	-	1532	-	-	787
HCM Lane V/C Ratio	0.293	0.005	-	-	0.006	-	-	0.616
HCM Control Delay (s)	11.4	7.3	0	-	7.4	0	-	16.6
HCM Lane LOS	B	A	A	-	A	A	-	C
HCM 95th %tile Q(veh)	1.2	0	-	-	0	-	-	4.3

Intersection	
Int Delay, s/veh	3.6

Movement	EBL	EBT	EBR	WBL	WBT	WBR	NBL	NBT	NBR	SBL	SBT	SBR
Lane Configurations												
Traffic Vol, veh/h	1	9	0	14	21	29	0	2	3	17	5	1
Future Vol, veh/h	1	9	0	14	21	29	0	2	3	17	5	1
Conflicting Peds, #/hr	0	0	0	0	0	0	0	0	0	0	0	0
Sign Control	Free	Free	Free	Free	Free	Free	Stop	Stop	Stop	Stop	Stop	Stop
RT Channelized	-	-	None	-	-	None	-	-	None	-	-	None
Storage Length	-	-	-	-	-	-	-	-	-	-	-	-
Veh in Median Storage, #	-	0	-	-	0	-	-	0	-	-	0	-
Grade, %	-	0	-	-	0	-	-	0	-	-	0	-
Peak Hour Factor	86	86	86	86	86	86	86	86	86	86	86	86
Heavy Vehicles, %	2	11	2	2	5	2	2	2	2	2	2	2
Mvmt Flow	1	10	0	16	24	34	0	2	3	20	6	1

Major/Minor	Major1			Major2			Minor1			Minor2		
Conflicting Flow All	58	0	0	10	0	0	89	102	10	88	85	41
Stage 1	-	-	-	-	-	-	12	12	-	73	73	-
Stage 2	-	-	-	-	-	-	77	90	-	15	12	-
Critical Hdwy	4.12	-	-	4.12	-	-	7.12	6.52	6.22	7.12	6.52	6.22
Critical Hdwy Stg 1	-	-	-	-	-	-	6.12	5.52	-	6.12	5.52	-
Critical Hdwy Stg 2	-	-	-	-	-	-	6.12	5.52	-	6.12	5.52	-
Follow-up Hdwy	2.218	-	-	2.218	-	-	3.518	4.018	3.318	3.518	4.018	3.318
Pot Cap-1 Maneuver	1546	-	-	1610	-	-	896	788	1071	897	805	1030
Stage 1	-	-	-	-	-	-	1009	886	-	937	834	-
Stage 2	-	-	-	-	-	-	932	820	-	1005	886	-
Platoon blocked, %		-	-		-	-						
Mov Cap-1 Maneuver	1546	-	-	1610	-	-	883	779	1071	884	796	1030
Mov Cap-2 Maneuver	-	-	-	-	-	-	883	779	-	884	796	-
Stage 1	-	-	-	-	-	-	1008	885	-	936	826	-
Stage 2	-	-	-	-	-	-	915	812	-	998	885	-

Approach	EB	WB	NB	SB
HCM Control Delay, s	0.7	1.6	8.9	9.3
HCM LOS			A	A

Minor Lane/Major Mvmt	NBLn1	EBL	EBT	EBR	WBL	WBT	WBR	SBLn1
Capacity (veh/h)	931	1546	-	-	1610	-	-	868
HCM Lane V/C Ratio	0.006	0.001	-	-	0.01	-	-	0.031
HCM Control Delay (s)	8.9	7.3	0	-	7.3	0	-	9.3
HCM Lane LOS	A	A	A	-	A	A	-	A
HCM 95th %tile Q(veh)	0	0	-	-	0	-	-	0.1

Intersection	
Int Delay, s/veh	0.8

Movement	EBL	EBT	EBR	WBL	WBT	WBR	NBL	NBT	NBR	SBL	SBT	SBR
Lane Configurations												
Traffic Vol, veh/h	13	2	15	3	0	4	21	1006	1	6	422	35
Future Vol, veh/h	13	2	15	3	0	4	21	1006	1	6	422	35
Conflicting Peds, #/hr	0	0	0	0	0	0	0	0	0	0	0	0
Sign Control	Stop	Stop	Stop	Stop	Stop	Stop	Free	Free	Free	Free	Free	Free
RT Channelized	-	-	Stop	-	-	Stop	-	-	None	-	-	None
Storage Length	-	-	-	-	-	-	610	-	600	565	-	550
Veh in Median Storage, #	-	0	-	-	0	-	-	0	-	-	0	-
Grade, %	-	0	-	-	0	-	-	0	-	-	0	-
Peak Hour Factor	79	79	79	79	79	79	79	79	79	79	79	79
Heavy Vehicles, %	2	2	2	2	2	2	14	6	2	17	19	6
Mvmt Flow	16	3	19	4	0	5	27	1273	1	8	534	44

Major/Minor	Minor2			Minor1			Major1			Major2		
Conflicting Flow All	1241	1878	267	1612	1921	637	578	0	0	1274	0	0
Stage 1	550	550	-	1327	1327	-	-	-	-	-	-	-
Stage 2	691	1328	-	285	594	-	-	-	-	-	-	-
Critical Hdwy	7.54	6.54	6.94	7.54	6.54	6.94	4.38	-	-	4.44	-	-
Critical Hdwy Stg 1	6.54	5.54	-	6.54	5.54	-	-	-	-	-	-	-
Critical Hdwy Stg 2	6.54	5.54	-	6.54	5.54	-	-	-	-	-	-	-
Follow-up Hdwy	3.52	4.02	3.32	3.52	4.02	3.32	2.34	-	-	2.37	-	-
Pot Cap-1 Maneuver	131	71	731	69	66	420	913	-	-	466	-	-
Stage 1	487	514	-	164	223	-	-	-	-	-	-	-
Stage 2	401	223	-	698	491	-	-	-	-	-	-	-
Platoon blocked, %								-	-		-	-
Mov Cap-1 Maneuver	125	68	731	63	63	420	913	-	-	466	-	-
Mov Cap-2 Maneuver	125	68	-	63	63	-	-	-	-	-	-	-
Stage 1	472	505	-	159	216	-	-	-	-	-	-	-
Stage 2	384	216	-	665	483	-	-	-	-	-	-	-

Approach	EB	WB	NB	SB
HCM Control Delay, s	24.2	31.1	0.2	0.2
HCM LOS	C	D		

Minor Lane/Major Mvmt	NBL	NBT	NBR	EBLn1	WBLn1	SBL	SBT	SBR
Capacity (veh/h)	913	-	-	225	147	466	-	-
HCM Lane V/C Ratio	0.029	-	-	0.169	0.06	0.016	-	-
HCM Control Delay (s)	9.1	-	-	24.2	31.1	12.9	-	-
HCM Lane LOS	A	-	-	C	D	B	-	-
HCM 95th %tile Q(veh)	0.1	-	-	0.6	0.2	0.1	-	-