Exhibit 6

DISH WIRELESS, LLC. SITE ID:

SEGEG00028B

DISH WIRELESS, LLC. SITE ADDRESS:

2301 RUSSELL CREEK RD
WALLA WALLA, WA 99362

SITE INFORMATION

PROPERTY OWNER:	DUANE DEPPING
ADDRESS:	2301 RUSSELL CREEK RD WALLA WALLA, WA 99362
TOWER TYPE:	MONOPOLE
COUNTY:	WALLA WALLA COUNTY
LATITUDE (NAD 83):	46° 03' 10.87" N
LONGITUDE (NAD 83):	118° 17' 31.46" W
ZONING JURISDICTION:	WALLA WALLA COUNTY
ZONING DISTRICT:	INDUSTRIAL AGRICULTURE HEAVY
PARCEL NUMBER:	360727440004
OCCUPANCY GROUP:	U
CONSTRUCTION TYPE:	V–B
POWER COMPANY:	TBD
FIBER COMPANY:	TBD

PROJECT DIRECTORY

APPLICANT:	DISH WIRELESS, LLC. 5701 SOUTH SANTA FE DRIVE LITTLETON, CO 80120 (800) 454–0843
SITE DESIGNER:	MORRISON HERSHFIELD 600 STEWART ST, SUITE 200 SEATTLE, WA 98101 (206) 268–7370
SITE ACQUISITION:	RYKA CONSULTING JEFF SMITH (208) 255–9905
CONSTRUCTION MANAGER:	DISH WIRELESS, LLC. DAVID DUFFY (425) 299–3121
RF ENGINEER:	DISH WIRELESS, LLC. MEHMET CAN BALCI mehmetcan.balci@dish.com

SCOPE OF WORK

THIS IS NOT AN ALL INCLUSIVE LIST. CONTRACTOR SHALL UTILIZE SPECIFIED EQUIPMENT PART OR ENGINEER APPROVED EQUIVALENT. CONTRACTOR SHALL VERIFY ALL NEEDED EQUIPMENT TO PROVIDE A FUNCTIONAL SITE. THE PROJECT GENERALLY CONSISTS OF THE FOLLOWING:

TOWER SCOPE OF WORK:
- INSTALL 100' MONOPOLE
- INSTALL (3) PROPOSED PANEL ANTENNAS (1 PER SECTOR)
- INSTALL (1) PROPOSED ANTENNA MOUNT
- INSTALL PROPOSED JUMPERS
- INSTALL (6) PROPOSED RRUs (2 PER SECTOR)
- INSTALL (1) PROPOSED OVP DEVICE
- INSTALL (1) PROPOSED HYBRID CABLE

GROUND SCOPE OF WORK:
- INSTALL ACCESS ROAD/DRIVE
- INSTALL PROPOSED CHAIN LINK FENCE
- INSTALL (1) PROPOSED CONCRETE PAD
- INSTALL (1) PROPOSED ICE BRIDGE
- INSTALL (1) PROPOSED PPC CABINET
- INSTALL (1) PROPOSED EQUIPMENT CABINET
- INSTALL (1) PROPOSED POWER CONDUIT
- INSTALL (1) PROPOSED TELCO CONDUIT
- INSTALL (1) PROPOSED TELCO–FIBER BOX
- INSTALL (1) PROPOSED GPS UNIT
- INSTALL (1) PROPOSED SAFETY SWITCH (IF REQUIRED)
- INSTALL (1) PROPOSED CIENA BOX (IF REQUIRED)
- INSTALL (1) PROPOSED METER SOCKET

WASHINGTON CODE COMPLIANCE

ALL WORK SHALL BE PERFORMED AND MATERIALS INSTALLED IN ACCORDANCE WITH THE CURRENT EDITIONS OF THE FOLLOWING CODES AS ADOPTED BY THE LOCAL GOVERNING AUTHORITIES. NOTHING IN THESE PLANS IS TO BE CONSTRUED TO PERMIT WORK NOT CONFORMING TO THESE CODES:

CODE TYPE	CODE
BUILDING	2018 IBC W/ W.A.C. AMENDMENTS
MECHANICAL	2018 IMC W/ W.A.C. AMENDMENTS
ELECTRICAL	2020 NEC W/ W.A.C. AMENDMENTS

SITE PHOTO

DIRECTIONS

DIRECTIONS FROM SPOKANE AIRPORT:

FOLLOW SIGNS FOR I–90 WEST AND HEAD TOWARD RITZVILLE; AT EXIT 221, HEAD RIGHT ON THE RAMP FOR WA–261 SOUTH TOWARD WASHTUCNA; TURN LEFT ONTO WA–261 / S DIVISION ST TOWARD WASHTUCNA / WA–261 SOUTH (NAME CHANGES TO WA–260 / WA–261 / N MAIN ST); TURN LEFT ONTO WA–261; TURN RIGHT ONTO LYONS FERRY RD (NAME CHANGES TO HARVEY SHAW RD); TURN RIGHT ONTO WA–125 / N 13TH AVE; TURN LEFT TO STAY ON WA–125 / W PINE ST; TURN RIGHT ONTO N 2ND AVE (ROAD NAME CHANGES TO S 2ND AVE); TURN LEFT ONTO E CHESTNUT ST; TURN RIGHT ONTO S HOWARD ST; TURN LEFT ONTO BRYANT AVE; TURN RIGHT ONTO SCHOOL AVE; TURN LEFT ONTO RUSSELL CREEK RD; ARRIVE AT RUSSELL CREEK RD ON THE RIGHT

SHEET INDEX

SHEET NO.	SHEET TITLE
T–1	TITLE SHEET
SV1	SITE SURVEY
A–1	OVERALL SITE PLAN
A–2	ENLARGED SITE PLAN
A–3	ELEVATION, ANTENNA LAYOUT AND SCHEDULE
CIVIL DRAWINGS (BY OTHERS)	
C1	ACCESS AND GRADING PLAN
C2	SWPPP/TESC PLAN, TRUCK AND CRANE STAGING PLAN
C3	DETAILS

UNDERGROUND SERVICE ALERT
UTILITY NOTIFICATION CENTER OF (STATE)
1 (800) 424-5555
http://www.callbeforeyoudig.org/washington/

CALL 2 WORKING DAYS UTILITY NOTIFICATION PRIOR TO CONSTRUCTION

811

GENERAL NOTES

THE FACILITY IS UNMANNED AND NOT FOR HUMAN HABITATION. A TECHNICIAN WILL VISIT THE SITE AS REQUIRED FOR ROUTINE MAINTENANCE. THE PROJECT WILL NOT RESULT IN ANY SIGNIFICANT DISTURBANCE OR EFFECT ON DRAINAGE. NO SANITARY SEWER SERVICE, POTABLE WATER, OR TRASH DISPOSAL IS REQUIRED AND NO COMMERCIAL SIGNAGE IS PROPOSED.

11"x17" PLOT WILL BE HALF SCALE UNLESS OTHERWISE NOTED

CONTRACTOR SHALL VERIFY ALL PLANS, EXISTING DIMENSIONS, AND CONDITIONS ON THE JOB SITE, AND SHALL IMMEDIATELY NOTIFY THE ENGINEER IN WRITING OF ANY DISCREPANCIES BEFORE PROCEEDING WITH THE WORK.

VICINITY MAP

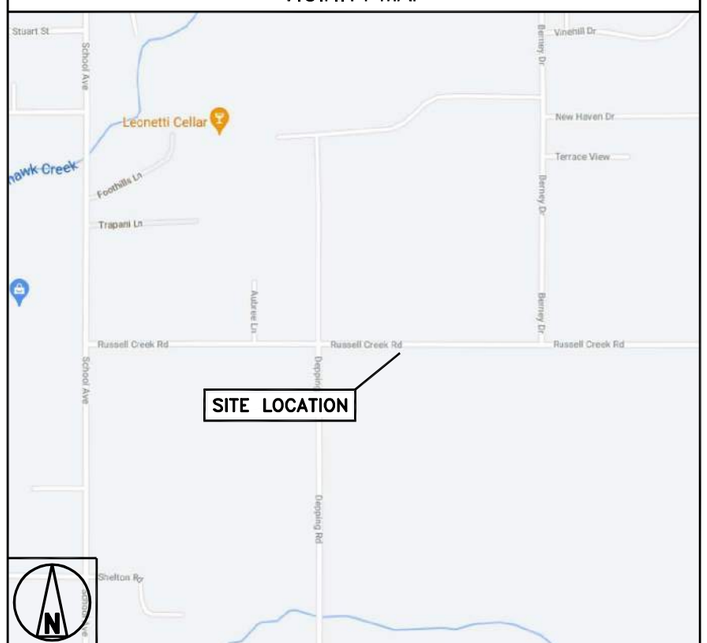

NO SCALE

dish wireless.
5701 SOUTH SANTA FE DRIVE
LITTLETON, CO 80120

MORRISON HERSHFIELD
600 STEWART STREET, SUITE 200
SEATTLE, WA 98101
Tel: 206.268.7370
www.morrisonhershfield.com

IT IS A VIOLATION OF LAW FOR ANY PERSON, UNLESS THEY ARE ACTING UNDER THE DIRECTION OF A LICENSED PROFESSIONAL ENGINEER, TO ALTER THIS DOCUMENT.

DRAWN BY:	CHECKED BY:	APPROVED BY:
LW	RKL	RL

RFDS REV #: 5

ZONING DOCUMENTS

SUBMITTALS

REV	DATE	DESCRIPTION
A	09/20/21	ISSUED FOR REVIEW
B	10/22/21	ISSUED FOR REVIEW
0	11/16/21	ISSUED FOR SUBMITTAL
0	04/25/22	ISSUED FOR SUBMITTAL
0	04/28/22	ISSUED FOR SUBMITTAL
0	06/07/22	ISSUED FOR SUBMITTAL

A&E PROJECT NUMBER

210019400

DISH WIRELESS, LLC. PROJECT INFORMATION

SEGEG00028B
DEPPING
2301 RUSSELL CREEK RD
WALLA WALLA, WA 99362

SHEET TITLE

TITLE SHEET

SHEET NUMBER

T-1

LEGAL DESCRIPTION

THE SOUTH HALF OF THE SOUTHEAST QUARTER OF SECTION 27 AND THE NORTHEAST QUARTER OF SECTION 34, TOWNSHIP 7 NORTH, RANGE 36 EAST, OF THE WILLAMETTE MERIDIAN. SITUATED IN THE COUNTY OF WALLA WALLA, STATE OF WASHINGTON.

EASEMENTS

(#) CORRESPONDS WITH ITEM NUMBER IN 'SCHEDULE B' OF TITLE REPORT.

THE FOLLOWING EASEMENTS FROM THE REFERENCED TITLE REPORT CONTAIN SUFFICIENT INFORMATION TO BE DEPICTED ON THE PLAN. OTHER EASEMENTS OR ENCUMBRANCES, IF ANY, MAY AFFECT THE PROPERTY, BUT LACK SUFFICIENT INFORMATION TO BE SHOWN.

NO EXCEPTIONS IN DOCUMENT PROVIDED

NOTES

1) TITLE REPORT PREPARED AND PROVIDED BY PROTITLE USA, ORDER #795527.
2) FIELD WORK CONDUCTED IN MARCH 2022.
3) BASIS OF BEARING: WASHINGTON STATE PLANE COORDINATE SYSTEM, SOUTH ZONE (NAD83/91).
4) UNDERGROUND UTILITIES SHOWN HEREON, IF ANY, WERE DELINEATED FROM SURFACE EVIDENCE AND/OR UTILITY COMPANY RECORDS. CRITICAL LOCATIONS SHOULD BE VERIFIED PRIOR TO DESIGN AND CONSTRUCTION.

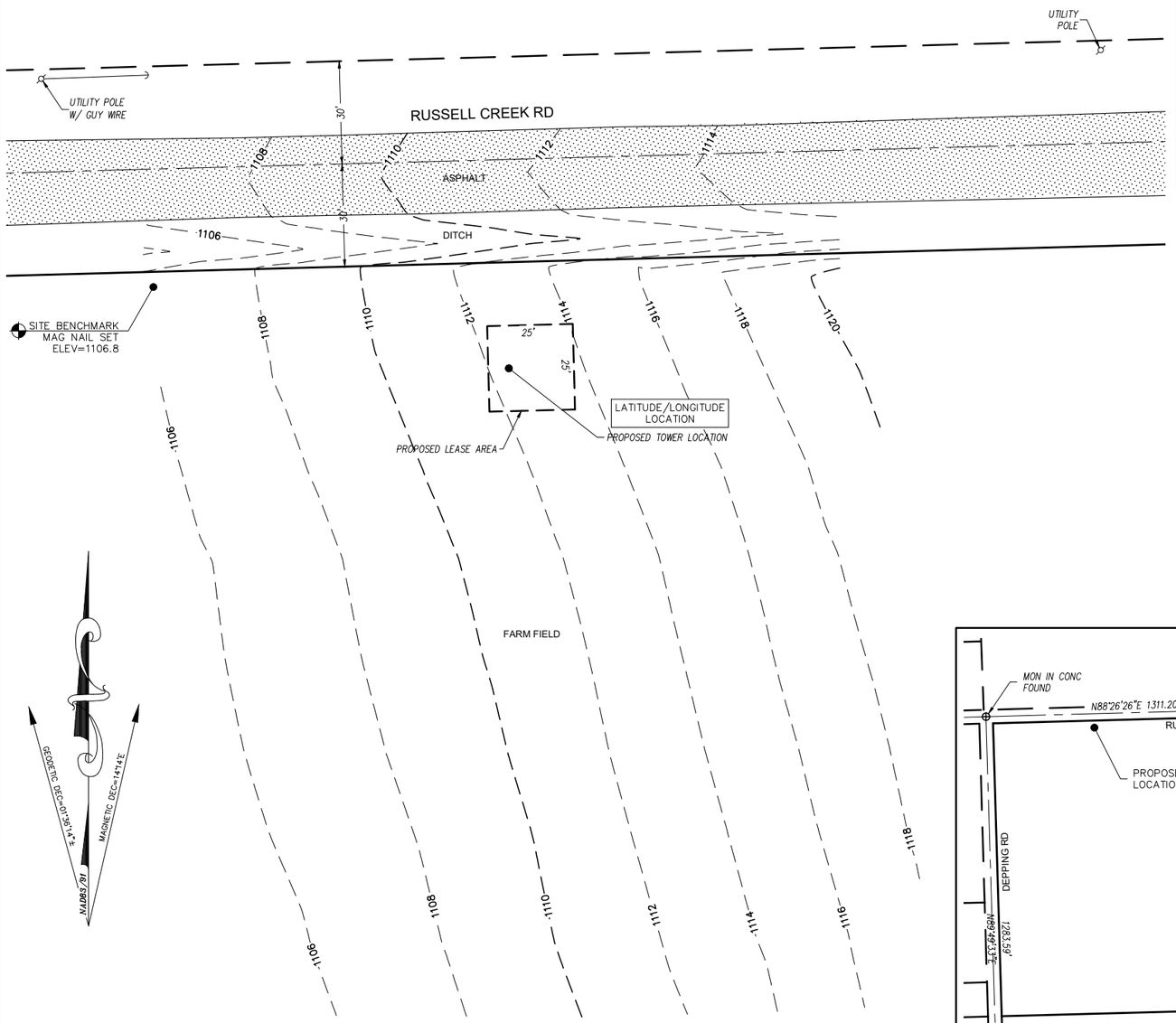

GRAPHIC SCALE

20 0 10 20 40 80

(IN FEET)
1 inch = 20 ft.
1 inch = 40 ft. (11x17 SHEET)

SITE DETAIL

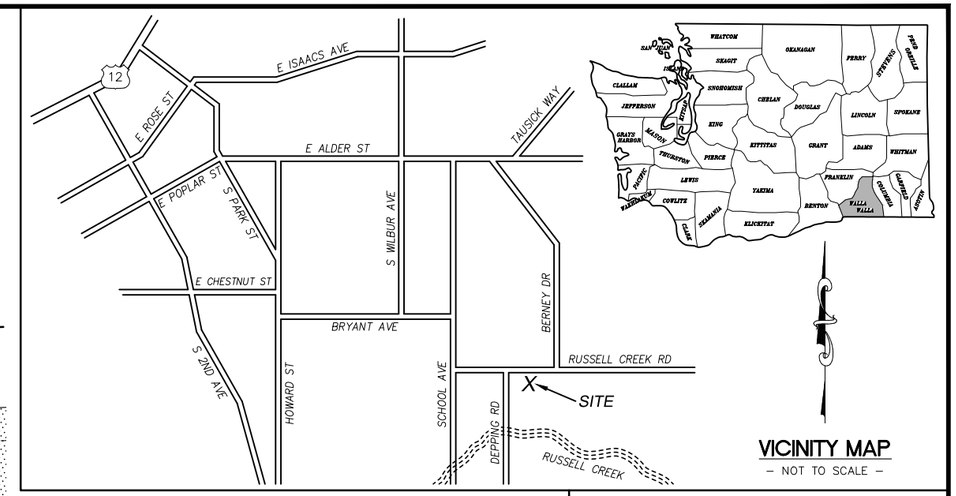

VICINITY MAP

– NOT TO SCALE –

LATITUDE/LONGITUDE POSITION

COORDINATE DATA AT PROPOSED TOWER LOCATION:
NAD 83/91
LAT – 46°03'10.59" N
LONG – 118°17'31.44" W

LAT – 46.052941° N
LONG – 118.292068° W

NAVD 88
ELEV= 1112.5 FEET

NAVD 88

BENCHMARK IS BASED ON WSRN PUGET SOUND REFERENCE NETWORK.

ELEVATION DERIVED USING GPS. ACCURACY MEETS OR EXCEEDS 1A STANDARDS AS DEFINED ON THE FAA ASAC INFORMATION SHEET 91:003.

SITE INFORMATION

TAX LOT NUMBER	360727440004 & 360734110001
SITE ADDRESS	2301 RUSSELL CREEK RD WALLA WALLA, WA 99362
SITE CONTACT	DAVID DUFFY
PHONE NUMBER	425-299-3121
ZONING	INDUSTRIAL AGRICULTURE HEAVY
TOTAL LOT AREA	77.3± ACRES
PROJECT AREA	625± S.F.

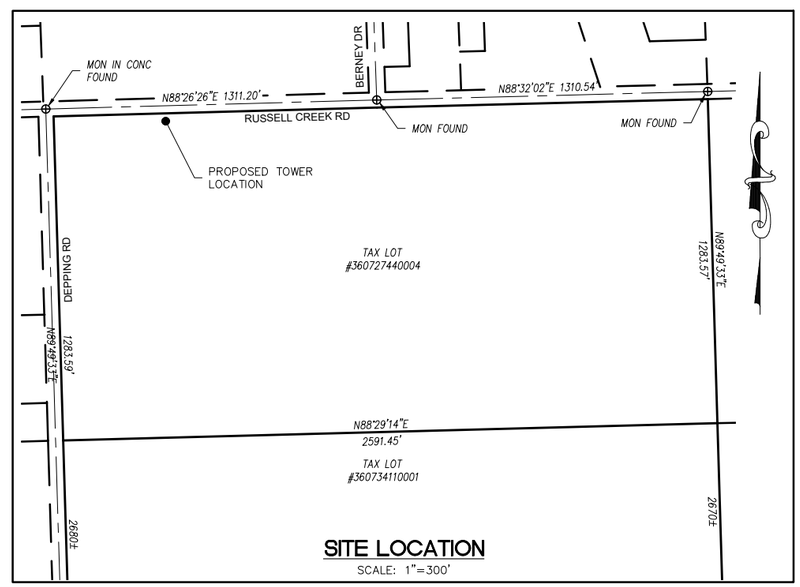

SITE LOCATION

SCALE: 1"=300'

LEGEND

	SUBJECT BOUNDARY LINE
	RIGHT-OF-WAY CENTERLINE
	RIGHT-OF-WAY LINE
	ADJACENT BOUNDARY LINE
	SECTIONAL BREAKDOWN LINE
OP	OVERHEAD POWER LINE
UP	BURIED POWER LINE
G	BURIED GAS LINE
OT	OVERHEAD TELEPHONE LINE
UT	BURIED TELEPHONE LINE
W	BURIED WATER LINE
SS	BURIED SANITARY SEWER
SD	BURIED STORM DRAIN
	DITCH LINE/FLOW LINE

TRANSFORMER	FIRE HYDRANT
LIGHT STANDARD	GATE VALVE
POWER VAULT	WATER METER
UTILITY BOX	FIRE STAND PIPE
UTILITY POLE	IRRIGATION CONTROL
POLE GUY WIRE	CATCH BASIN, TYPE I
GAS VALVE	CATCH BASIN, TYPE II
GAS METER	SIGN
TELEPHONE VAULT	BOLLARD
TEL. MANHOLE	MAIL BOX
TELEPHONE RISER	234.21 SPOT ELEVATION

NOTE:
1) ALL ELEVATIONS SHOWN ARE ABOVE MEAN SEA LEVEL (AMSL) AND ARE REFERENCED TO THE NAVD88 DATUM.
2) ALL TOWER, TREE AND APPURTENANCE HEIGHTS ARE ABOVE GROUND LEVEL (AGL) AND ARE ACCURATE TO ± 0.5 FEET OR ± 1% OF TOTAL HEIGHT, WHICHEVER IS GREATER.

SURVEY REFERENCE

1. LEASE PARCEL SURVEY, RECORDED AUG 2004, BOOK 9 OF SURVEYS, PAGE 145, WALLA WALLA CO RECORDS.
2. BOUNDARY LINE ADJUSTMENT, RECORDED SEPT 2003, BOOK 9 OF SURVEYS, PAGE 52, WALLA WALLA CO RECORDS.
3. BOUNDARY ADJUSTMENT, RECORDED FEB 2012, BOOK 11 OF SURVEYS, PAGE 306, WALLA WALLA CO RECORDS.

BOUNDARY DISCLAIMER

THIS PLAN DOES NOT REPRESENT A BOUNDARY SURVEY. SUBJECT AND ADJACENT PROPERTY LINES ARE DEPICTED USING FIELD-FOUND EVIDENCE AND RECORD INFORMATION.

UNDERGROUND UTILITIES EXIST IN THE AREA AND UTILITY INFORMATION SHOWN MAY BE INCOMPLETE. STATE LAW REQUIRES THAT CONTRACTOR CONTACT THE ONE-CALL UTILITY LOCATE SERVICE AT LEAST 48 HOURS BEFORE STARTING ANY CONSTRUCTION.

811 Know what's below. Call before you dig.

dish WIRELESS

MORRISON HERSHFIELD
600 Stewart Street, Suite 200
Seattle, WA 98101
Tel: 206.268.7370
www.morrisonhershfield.com

DUNCANSON
Company, Inc.
145 SW 155th Street, Suite 102
Seattle, Washington 98166
Phone 206.244.4141
Fax 206.244.4455

SITE
SEGEG00028B
DEPPING
2301 RUSSELL CREEK RD
WALLA WALLA, WA 99362
WALLA WALLA COUNTY

THIS DRAWING WAS CREATED FOR THE EXCLUSIVE USE OF THE CLIENT NAMED HEREON, AND IS NOT TO BE USED IN WHOLE OR IN PART WITHOUT WRITTEN AUTHORIZATION FROM SAID CLIENT.
© 2022, DUNCANSON COMPANY, INC.

FLD. CREW:	DC/JW
FLD. BOOK:	587/72
DRAWN BY:	DAS
JOB #:	20135.054
DATE:	5/11/22

REVISIONS

DATE	DESCRIPTION	BY

KEVIN J WALKER, STATE OF WASHINGTON, 41038, REGISTERED PROFESSIONAL LAND SURVEYOR
5/13/22

SHEET TITLE
EXISTING SITE SURVEY
SEC 27, TWP 7 N, RNG 36 E, WM

SHEET NUMBER
SV1

NOTES

1. THIS IS NOT A SURVEY. ALL INFORMATION AND TRUE NORTH HAVE BEEN OBTAINED FROM EXISTING DRAWINGS AND JURISDICTIONAL GIS INFORMATION AND ARE APPROXIMATE.
2. CONTRACTOR SHALL FIELD VERIFY ALL DIMENSIONS.
3. ANTENNAS AND MOUNTS OMITTED FOR CLARITY.

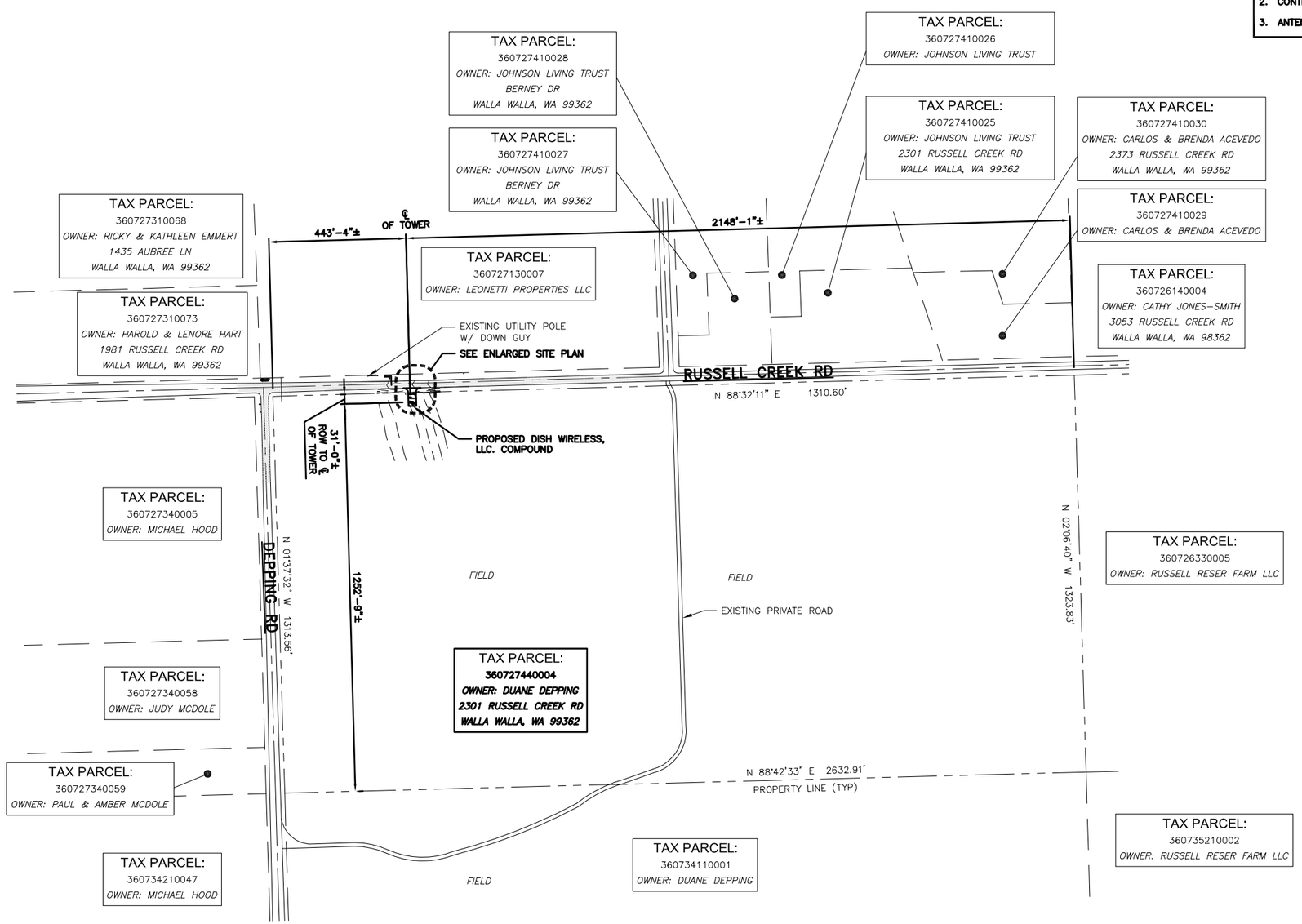

OVERALL SITE PLAN

200' 100' 0 200' 400'
1"=200'

1

dish wireless.
5701 SOUTH SANTA FE DRIVE
LITTLETON, CO 80120

MORRISON HERSHFIELD
600 STEWART STREET, SUITE 200
SEATTLE, WA 98101
Tel: 206.268.7370
www.morrisonhershfield.com

IT IS A VIOLATION OF LAW FOR ANY PERSON, UNLESS THEY ARE ACTING UNDER THE DIRECTION OF A LICENSED PROFESSIONAL ENGINEER, TO ALTER THIS DOCUMENT.

DRAWN BY:	CHECKED BY:	APPROVED BY:
LW	RKL	RL

RFDS REV #: 5

ZONING DOCUMENTS

SUBMITTALS

REV	DATE	DESCRIPTION
A	09/20/21	ISSUED FOR REVIEW
B	10/22/21	ISSUED FOR REVIEW
0	11/16/21	ISSUED FOR SUBMITTAL
0	04/25/22	ISSUED FOR SUBMITTAL
0	04/28/22	ISSUED FOR SUBMITTAL
0	06/07/22	ISSUED FOR SUBMITTAL

A&E PROJECT NUMBER
210019400

DISH WIRELESS, LLC. PROJECT INFORMATION
SEGEG00028B
DEPPING
2301 RUSSELL CREEK RD
WALLA WALLA, WA 99362

SHEET TITLE
OVERALL SITE PLAN

SHEET NUMBER
A-1

NOTES

1. CONTRACTOR SHALL FIELD VERIFY ALL DIMENSIONS.
2. CONTRACTOR SHALL MAINTAIN A 10'-0" MINIMUM SEPARATION BETWEEN THE PROPOSED GPS UNIT, TRANSMITTING ANTENNAS AND EXISTING GPS UNITS.
3. ANTENNAS AND MOUNTS OMITTED FOR CLARITY.

SEE CIVIL DRAWINGS FOR GRADING, DRIVEWAY AND CULVERT DESIGN

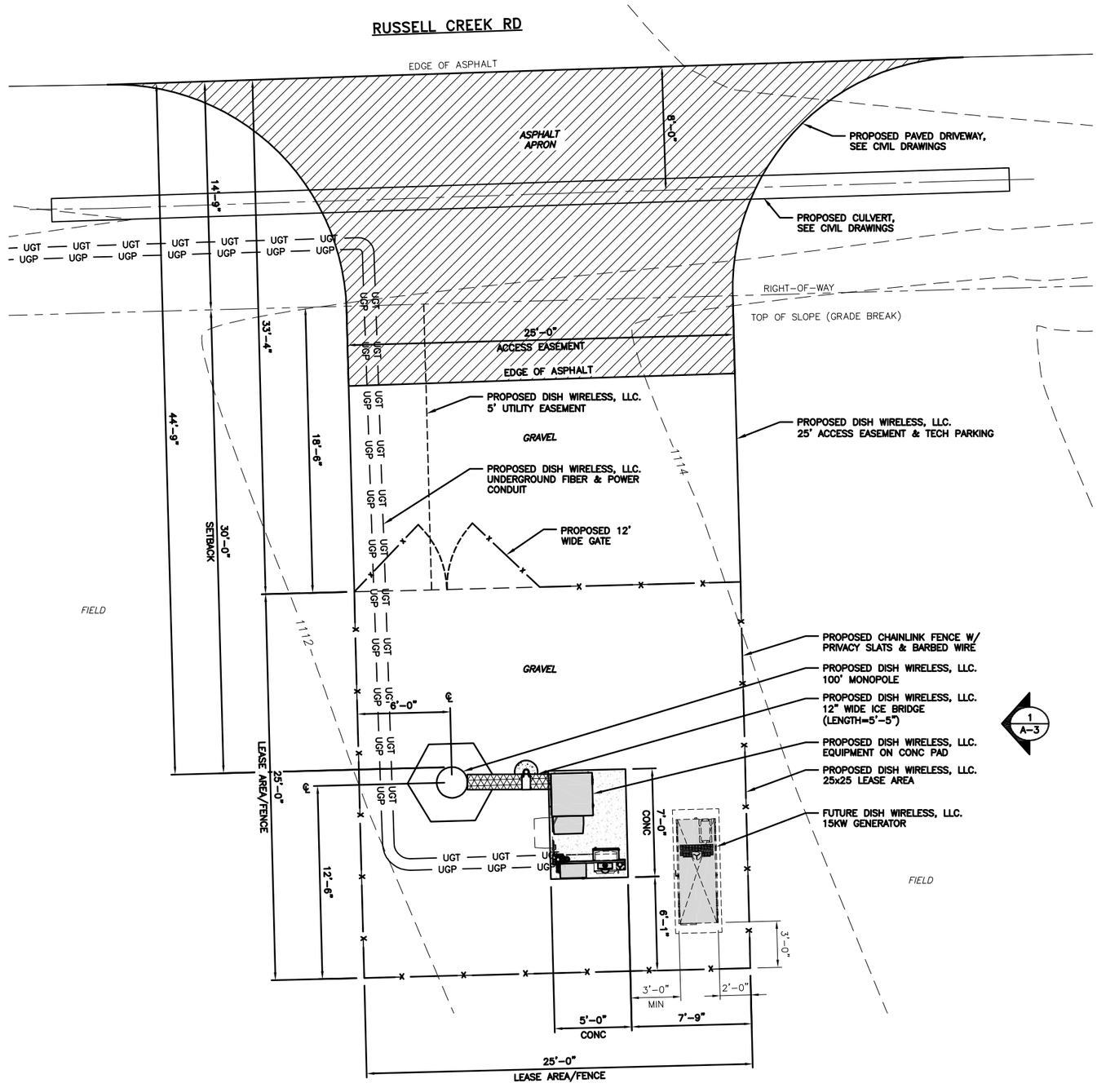

ENLARGED SITE PLAN

4' 2' 0 4' 8'
1/4"=1'-0"

1

dish wireless.

5701 SOUTH SANTA FE DRIVE
LITTLETON, CO 80120

MORRISON HERSHFIELD
600 STEWART STREET, SUITE 200
SEATTLE, WA 98101
Tel: 206.268.7370
www.morrisonhershfield.com

IT IS A VIOLATION OF LAW FOR ANY PERSON, UNLESS THEY ARE ACTING UNDER THE DIRECTION OF A LICENSED PROFESSIONAL ENGINEER, TO ALTER THIS DOCUMENT.

DRAWN BY:	CHECKED BY:	APPROVED BY:
LW	RKL	RL

RFDS REV #: 5

ZONING DOCUMENTS

SUBMITTALS

REV	DATE	DESCRIPTION
A	09/20/21	ISSUED FOR REVIEW
B	10/22/21	ISSUED FOR REVIEW
0	11/16/21	ISSUED FOR SUBMITTAL
0	04/25/22	ISSUED FOR SUBMITTAL
0	04/28/22	ISSUED FOR SUBMITTAL
0	06/07/22	ISSUED FOR SUBMITTAL

A&E PROJECT NUMBER

210019400

DISH WIRELESS, LLC. PROJECT INFORMATION

SEGEG00028B
DEPPING
2301 RUSSELL CREEK RD
WALLA WALLA, WA 99362

SHEET TITLE

ENLARGED SITE PLAN

SHEET NUMBER

A-2

NOTES

1. CONTRACTOR SHALL FIELD VERIFY ALL DIMENSIONS.
2. ANTENNA AND MW DISH SPECIFICATIONS REFER TO ANTENNA SCHEDULE AND TO FINAL CONSTRUCTION RFDS FOR ALL RF DETAILS
3. ANTENNA MOUNT: ANTENNA MOUNTING BRACKETS WILL NEED 2 POINTS OF CONNECTION TO THE MOUNTING PIPE (TOP/BOTTOM); ALL MOUNTING PIPES TO BE GALV SCH40 2-3/8" O.D.

   (9) ANTENNA MOUNTING PIPES, 9'-6" LENGTH
4. POLE & ANTENNAS WILL BE PAINTED WITH A NON-REFLECTIVE PAINT

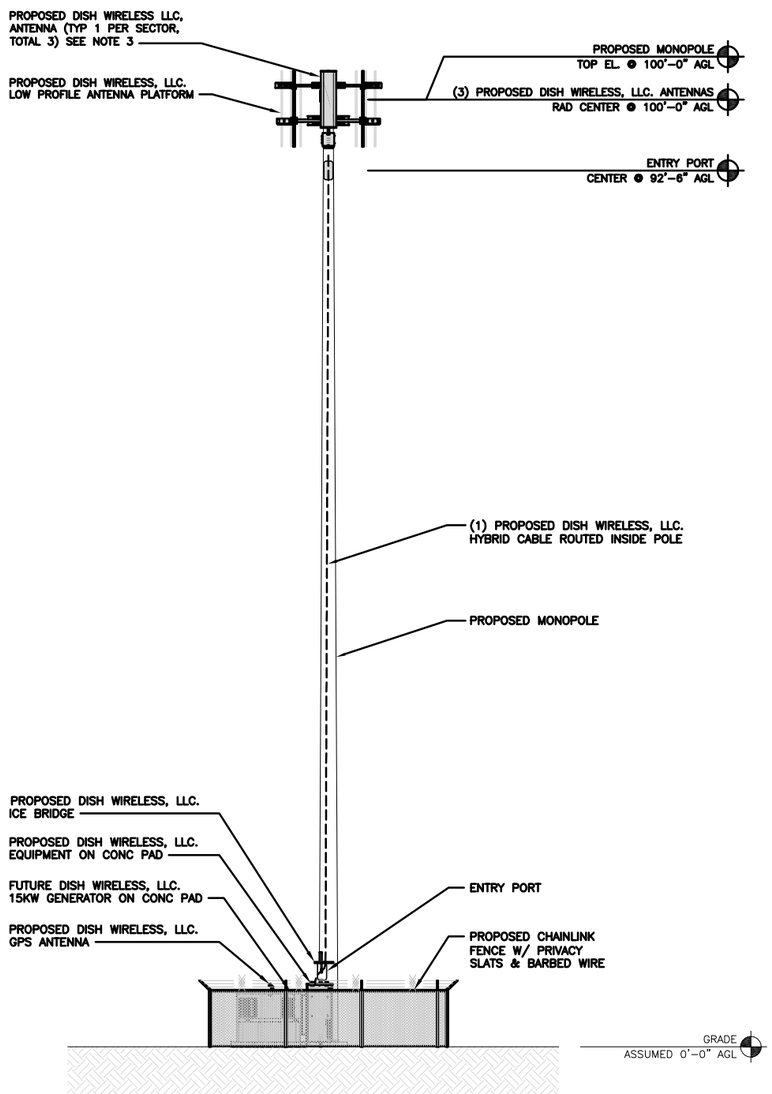

PROPOSED SOUTH ELEVATION

8' 4' 0 8' 16'
1/8"=1'-0"

1

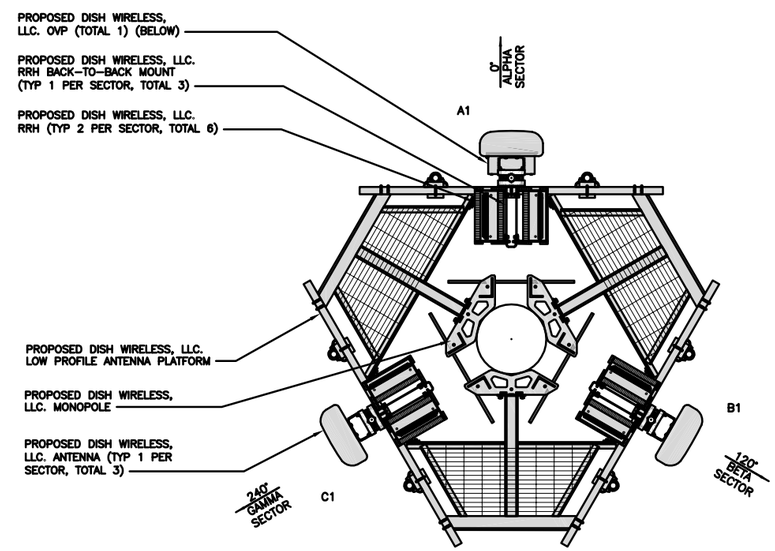

ANTENNA RAD CENTER @ 100'-0" A.G.L.

ANTENNA LAYOUT

12" 6" 0 1' 2' 3'
3/4"=1'-0"

2

SECTOR	POSITION	ANTENNA						TRANSMISSION CABLE
		EXISTING OR PROPOSED	MANUFACTURER – MODEL NUMBER	TECHNOLOGY	SIZE (HxW)	AZMUITH	RAD CENTER	FEED LINE TYPE AND LENGTH
ALPHA	A1	PROPOSED	JMA-MX08FRO665-21	5G	72.0" x 20.0"	0°	100'-0"	(1) HYBRID (130' LONG, CONTRACTOR TO VERIFY)
BETA	B1	PROPOSED	JMA-MX08FRO665-21	5G	72.0" x 20.0"	120°	100'-0"	
GAMMA	C1	PROPOSED	JMA-MX08FRO665-21	5G	72.0" x 20.0"	240°	100'-0"	

SECTOR	POSITION	RRH	
		MANUFACTURER – MODEL NUMBER	TECHNOLOGY
ALPHA	A1	FUJITSU – TA08025-B605	N71/N29
	A1	FUJITSU – TA08025-B604	N70/N66
BETA	B1	FUJITSU – TA08025-B605	N71/N29
	B1	FUJITSU – TA08025-B604	N70/N66
GAMMA	C1	FUJITSU – TA08025-B605	N71/N29
	C1	FUJITSU – TA08025-B604	N70/N66

NOTES

1. CONTRACTOR TO REFER TO FINAL CONSTRUCTION RFDS FOR ALL RF DETAILS.
2. ANTENNA AND RRH MODELS MAY CHANGE DUE TO EQUIPMENT AVAILABILITY. ALL EQUIPMENT CHANGES MUST BE APPROVED AND REMAIN IN COMPLIANCE WITH THE PROPOSED DESIGN AND STRUCTURAL ANALYSES.

ANTENNA SCHEDULE

NO SCALE

3

dish wireless.
5701 SOUTH SANTA FE DRIVE
LITTLETON, CO 80120

MORRISON HERSHFIELD
600 STEWART STREET, SUITE 200
SEATTLE, WA 98101
Tel: 206.268.7370
www.morrisonhershfield.com

IT IS A VIOLATION OF LAW FOR ANY PERSON, UNLESS THEY ARE ACTING UNDER THE DIRECTION OF A LICENSED PROFESSIONAL ENGINEER, TO ALTER THIS DOCUMENT.

DRAWN BY:	CHECKED BY:	APPROVED BY:
LW	RKL	RL

RFDS REV #: 5

ZONING DOCUMENTS

SUBMITTALS

REV	DATE	DESCRIPTION
A	09/20/21	ISSUED FOR REVIEW
B	10/22/21	ISSUED FOR REVIEW
0	11/16/21	ISSUED FOR SUBMITTAL
0	04/25/22	ISSUED FOR SUBMITTAL
0	04/28/22	ISSUED FOR SUBMITTAL
0	06/07/22	ISSUED FOR SUBMITTAL

A&E PROJECT NUMBER

210019400

DISH WIRELESS, LLC. PROJECT INFORMATION

SEGEG00028B
DEPPING
2301 RUSSELL CREEK RD
WALLA WALLA, WA 99362

SHEET TITLE

ELEVATION, ANTENNA LAYOUT & SCHEDULE

SHEET NUMBER

A-3

SECTION 27, TOWNSHIP 7 NORTH, RANGE 36 EAST, W.M.

DISH WIRELESS NEW SITE BUILD - DEPPING

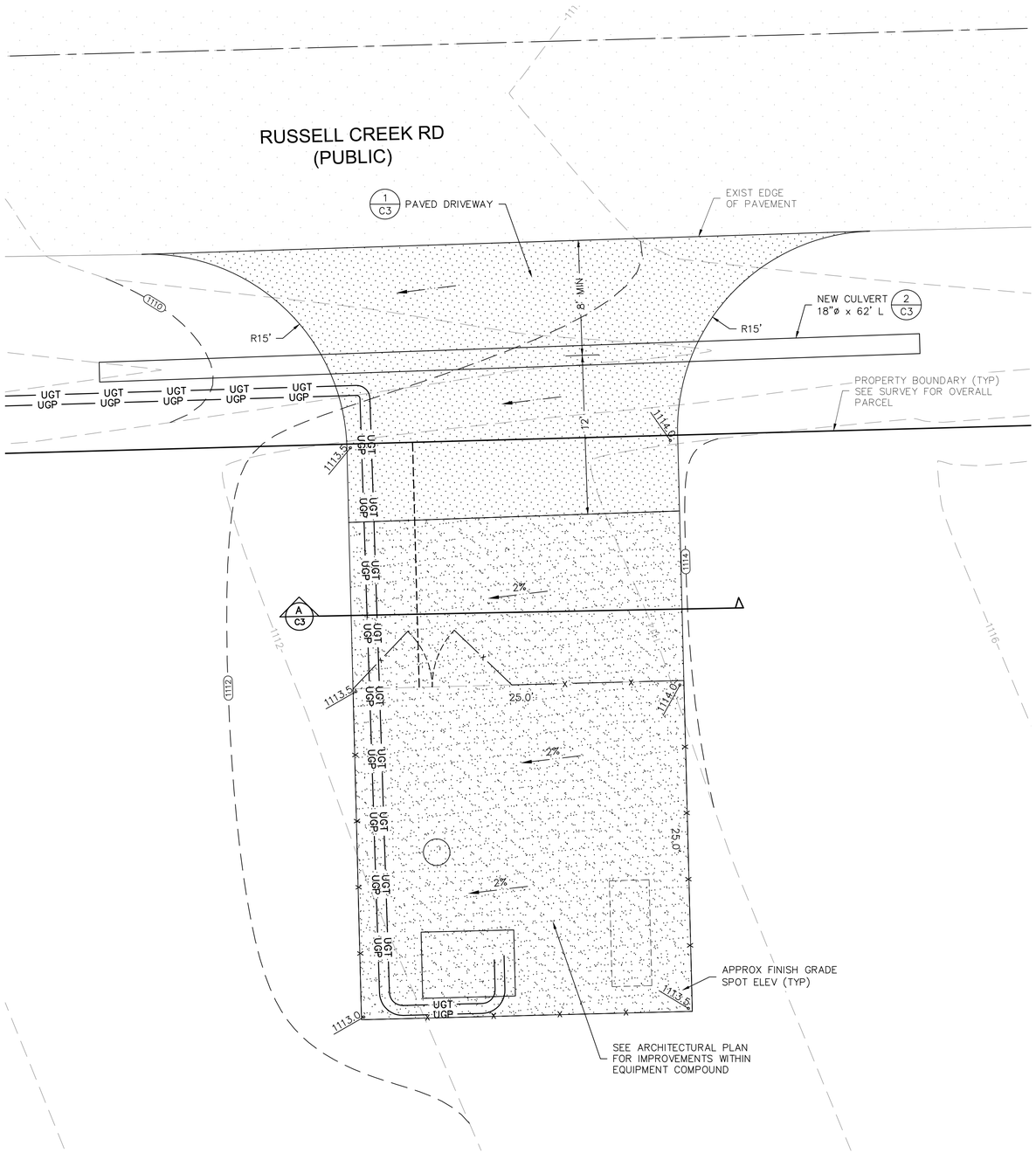

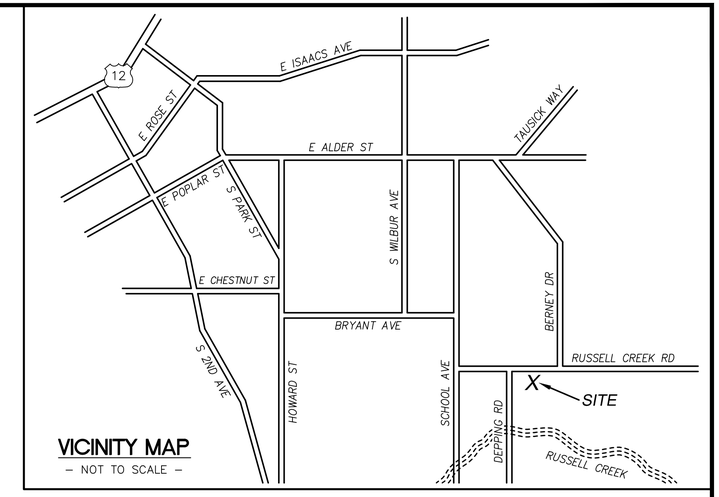

VICINITY MAP

– NOT TO SCALE –

SITE LOCATION

SCALE: 1"=300'

CONTACT INFORMATION

PROPERTY OWNER:	DUANE DEPPING 450 TUTTLE LN BURBANK, WA 99323
APPLICANT:	DISH WIRELESS, LLC 5701 SOUTH SANTA FE DRIVE LITTLETOWN, CO 80120 (800) 454–0843
PROJECT CONSULTANT:	MORRISON HERSHFIELD 600 STEWART ST, SUITE 200 SEATTLE, WA 98101 (206) 268–7370
ENGINEER/SURVEYOR:	DUNCANSON COMPANY, INC. 145 SW 155TH ST, SUITE 102 SEATTLE, WA 98166 CONTACT: HAROLD DUNCANSON 206–244–4141 HAROLDD@DUNCANSONCO.COM

SITE INFORMATION

SITE ADDRESS:	2301 RUSSELL CREEK RD WALLA WALLA, WA 99362
TAX LOT NUMBER:	360727440004
TOTAL LOT AREA:	77.3± ACRES
ZONING:	INDUSTRIAL AGRICULTURE HEAVY
DISTURBED AREA:	2,600± SF
NEW/REPLACED IMPERVIOUS AREA:	1,600± SF

SHEET INDEX

C1 ABBREVIATED DRAINAGE/GRADING PLAN
C2 SWPPP/TESC PLAN
C3 DETAILS

GENERAL NOTES

1. ALL WORK SHALL CONFORM TO WALLA WALLA COUNTY REQUIREMENTS, AND THE WSDOT/APWA STANDARD SPECIFICATIONS FOR ROAD, BRIDGE AND MUNICIPAL CONSTRUCTION.
2. CONTACT DUNCANSON COMPANY IF ANY CONFLICTS ARE DISCOVERED THAT MAY NECESSITATE CHANGES TO THE WORK.
3. SLOPE GROUND AWAY FROM BUILDING/STRUCTURES AT 2% MIN FOR 5 FEET. GRADE TO AVOID PONDING OR LOW SPOTS.
4. ALL WORK SHALL CONFORM TO THE RECOMMENDATIONS IN THE GEOTECHNICAL ENGINEERING REPORT.
5. CONTRACTOR SHALL COORDINATE WITH CONSTRUCTION MANAGER AND LAND OWNER REGARDING DISPOSAL OF CLEARING DEBRIS, SOIL STRIPPING MATERIAL AND ANY EXCESS CUT MATERIAL. SUBJECT TO ANY CLEARING RESTRICTIONS, THE ROAD CUT AND FILL SLOPES MAY BE ADJUSTED TO BETTER BALANCE CUT AND FILL.

GRAPHIC SCALE

5 0 2.5 5 10 20

(IN FEET)
1 inch = 5 ft.
1 inch = 10 ft. (11x17 SHEET)

NAVD 88

BENCHMARK IS BASED ON WSRN PUGET SOUND REFERENCE NETWORK.

811 Know what's **below.** **Call** 48 hours before you dig.

DUNCANSON
Company, Inc.
145 SW 155th Street, Suite 102
Seattle, Washington 98166
Phone 206.244.4141
Fax 206.244.4455

dish WIRELESS
2301 RUSSELL CREEK RD
WALLA WALLA, WA 99362
WALLA WALLA COUNTY

REVISIONS

NO.	DATE	DESCRIPTION	BY
–			–

SEGEG00028B
DEPPING

ACCESS AND GRADING PLAN

DRAWN: DAS
DCI NO: 20135.054
DATE: 6/3/22

HAROLD M. DUNCANSON
STATE OF WASHINGTON
29647
6/3/2022
REGISTERED PROFESSIONAL ENGINEER

C1

X:\PROJECTS\2020 PROJECTS\20135 DISH\LDT 001–099\20135054 SEGEG00028B DEPPING\20135054 C3D\20135054 DEPPING MODEL.DWG

SECTION 27, TOWNSHIP 7 NORTH, RANGE 36 EAST, W.M.

DISH WIRELESS NEW SITE BUILD - DEPPING

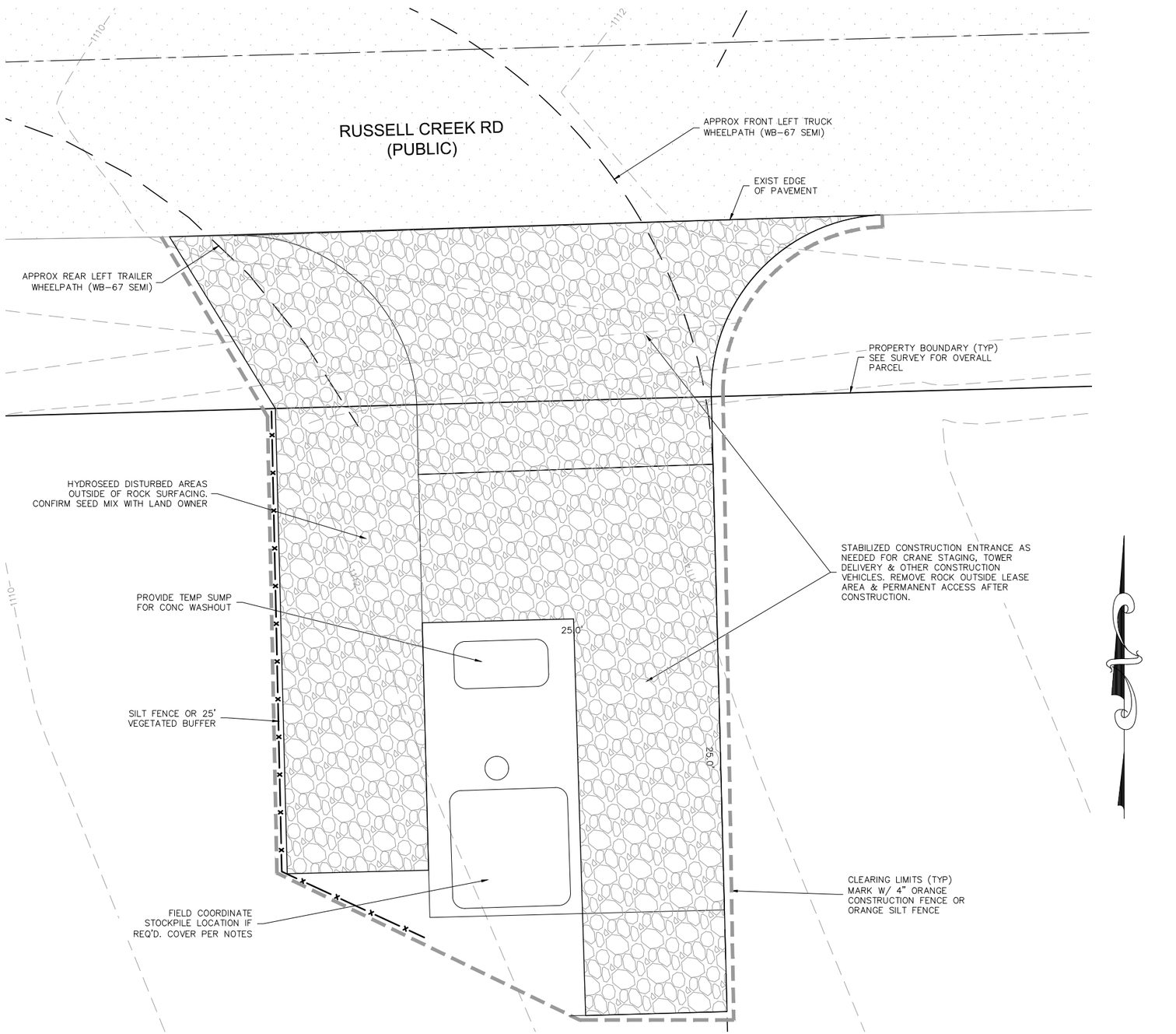

GRAPHIC SCALE

5 0 2.5 5 10 20

(IN FEET)
1 inch = 5 ft.
1 inch = 10 ft. (11x17 SHEET)

SWPPP STANDARD NOTES

1. APPROVAL OF THIS EROSION/SEDIMENTATION CONTROL (ESC) PLAN DOES NOT CONSTITUTE AN APPROVAL OF PERMANENT ROAD OR DRAINAGE DESIGN (E.G. SIZE AND LOCATION OF ROADS, PIPES, RESTRICTORS, CHANNELS, RETENTION FACILITIES, UTILITIES).
2. THE IMPLEMENTATION OF THIS ESC PLAN AND THE CONSTRUCTION, MAINTENANCE, REPLACEMENT, AND UPGRADING OF THESE ESC BMPS IS THE RESPONSIBILITY OF THE APPLICANT UNTIL ALL CONSTRUCTION IS COMPLETED AND APPROVED AND VEGETATION/LANDSCAPING IS ESTABLISHED.
3. CLEARLY FLAG THE BOUNDARIES OF THE CLEARING LIMITS SHOWN ON THIS PLAN IN THE FIELD PRIOR TO CONSTRUCTION. DURING THE CONSTRUCTION PERIOD, NO DISTURBANCE BEYOND THE FLAGGED CLEARING LIMITS SHALL BE PERMITTED. THE FLAGGING SHALL BE MAINTAINED BY THE APPLICANT FOR THE DURATION OF CONSTRUCTION.
4. CONSTRUCT THE ESC BMPS SHOWN ON THIS PLAN IN CONJUNCTION WITH ALL CLEARING AND GRADING ACTIVITIES, AND IN SUCH A MANNER AS TO ENSURE THAT SEDIMENT AND SEDIMENT LADEN WATER DO NOT ENTER THE DRAINAGE SYSTEM, ROADWAYS, OR VIOLATE APPLICABLE WATER STANDARDS. (CEP V/SDOT SWMEW APPENDIX 1-A)
5. THE ESC BMPS SHOWN ON THIS PLAN ARE THE MINIMUM REQUIREMENTS FOR ANTICIPATED SITE CONDITIONS. DURING THE CONSTRUCTION PERIOD, UPGRADE THESE ESC BMPS AS NEEDED FOR UNEXPECTED STORM EVENTS AND TO ENSURE THAT SEDIMENT AND SEDIMENT-LADEN WATER DO NOT LEAVE THE SITE.
6. THE APPLICANT SHALL INSPECT THE ESC BMPS DAILY AND MAINTAIN THEM AS NECESSARY TO ENSURE THEIR CONTINUED FUNCTIONING.
7. INSPECT AND MAINTAIN THE ESC BMPS ON INACTIVE SITES A MINIMUM OF ONCE A MONTH OR WITHIN THE 48 HOURS FOLLOWING A MAJOR STORM EVENT (I.E. A 24-HOUR STORM EVENT WITH A 10-YR OR GREATER RECURRENCE INTERVAL).
8. AT NO TIME SHALL THE SEDIMENT EXCEED 60-PERCENT OF THE SUMP DEPTH OR HAVE LESS THAN 6-INCHES OF CLEARANCE FROM THE SEDIMENT SURFACE TO THE INVERT OF THE LOWEST PIPE. ALL CATCH BASINS AND CONVEYANCE LINES SHALL BE CLEANED PRIOR TO PAVING. THE CLEANING OPERATION SHALL NOT FLUSH SEDIMENT LADEN WATER INTO THE DOWNSTREAM SYSTEM.
9. INSTALL STABILIZED CONSTRUCTION ENTRANCES AT THE BEGINNING OF CONSTRUCTION AND MAINTAINED FOR THE DURATION OF THE PROJECT. ADDITIONAL MEASURES MAY BE REQUIRED TO ENSURE THAT ALL PAVED AREAS ARE KEPT CLEAN FOR THE DURATION OF THE PROJECT.

SOURCE CONTROL NOTES

1. CONTRACTOR SHALL DEVELOP A SPILL PREVENTION PLAN AND MAINTAIN APPROPRIATE SPILL RESPONSE SUPPLIES FOR ANY TOXIC OR HAZARDOUS LIQUIDS STORED OR USED ON SITE.
2. PROVIDE PLASTIC COVERING OR OTHER SUITABLE MEANS OF KEEPING RAINFALL AND RUNOFF OFF OF POTENTIALLY POLLUTING MATERIALS AND WASTES.
3. PROVIDE A 10'x25' CONSTRUCTION EQUIPMENT FUELING AREA (FIELD LOCATE), IF FUELING OCCURS ON SITE,
4. LIGHTING IS REQUIRED IF FUELING (PROVIDED BY SERVICE TRUCKS) OCCURS AT NIGHT.
5. DRIP PANS OR PLASTIC SHEETING IS REQUIRED WHEN EQUIPMENT MAINTENANCE IS PERFORMED ON SITE.
6. PROVIDE A 5'x10'x1'D SUMP FOR CONCRETE SLURRY AND TOOL WASH WATER (FIELD LOCATE), IF WASHING OF TOOLS OCCURS ON SITE.

CONSTRUCTION SEQUENCE

1. INSTALL SILT FENCE AND CONSTRUCTION ENTRANCE
2. GRADE TOWER SITE AND ACCESS DRIVEWAY
3. CONSTRUCT TOWER AND OTHER UTILITIES
4. INSTALL FINAL SURFACING
5. REMOVE SILT FENCE
6. CLEAN UP

NOTE: ADDITIONAL EROSION AND SEDIMENT CONTROL MEASURES MAY BE REQUIRED DEPENDING ON ACTUAL SITE CONDITIONS, WEATHER AND CONSTRUCTION SCHEDULING. THE CONTRACTOR IS RESPONSIBLE FOR PREVENTING SEDIMENT FROM LEAVING THE SITE THROUGH EITHER SURFACE WATER FLOW, TRACKING ONTO ROADS, DUST OR OTHERWISE

RE-SEED MIX OPTIONS

HYDROSEED W/WOOD FIBER MULCH @ 1,500 LB/AC AND TACKIFIER.

COMMON NAME	MIXTURES (LBS/AC)*
BUNCH WHEATGRASS (N)	14
SHEEP FESCUE (I)	2
BIG BLUEGRASS (N)	2
TOTAL	18
SEEDS/SQ FT/MIXTURE	112

*EXPRESSED AS PURE LIVE SEED (PLS)
(N) = NATIVE PLANT SPECIES
(I) = INTRODUCED, NON-NATIVE PLANT SPECIES

NOTE: CONFIRM SEED MIX COMPATIBILITY WITH LAND OWNER PRIOR TO WORK.

811
Know what's **below.**
Call 48 hours before you dig.

DUNCANSON
Company, Inc.
145 SW 155th Street, Suite 102
Seattle, Washington 98166
Phone 206.244.4141
Fax 206.244.4455

dish WIRELESS
2301 RUSSELL CREEK RD
WALLA WALLA, WA 99362
WALLA WALLA COUNTY

REVISIONS

NO.	DATE	DESCRIPTION	BY
-	-	-	-

SEGEG00028B
DEPPING
SWPPP/TESC PLAN
TRUCK AND CRANE STAGING PLAN

DRAWN: DAS
DCI NO: 20135.054
DATE: 6/3/22

HAROLD M. DUNCANSON
STATE OF WASHINGTON
29647
6/3/2022
REGISTERED PROFESSIONAL ENGINEER

C2

X:\PROJECTS\2020 PROJECTS\20135 DISH\LDT 001-099\20135054 SEGEG00028B DEPPING\20135054 C3D\20135054 DEPPING MODEL.DWG

SECTION 27, TOWNSHIP 7 NORTH, RANGE 36 EAST, W.M.

DISH WIRELESS NEW SITE BUILD - DEPPING

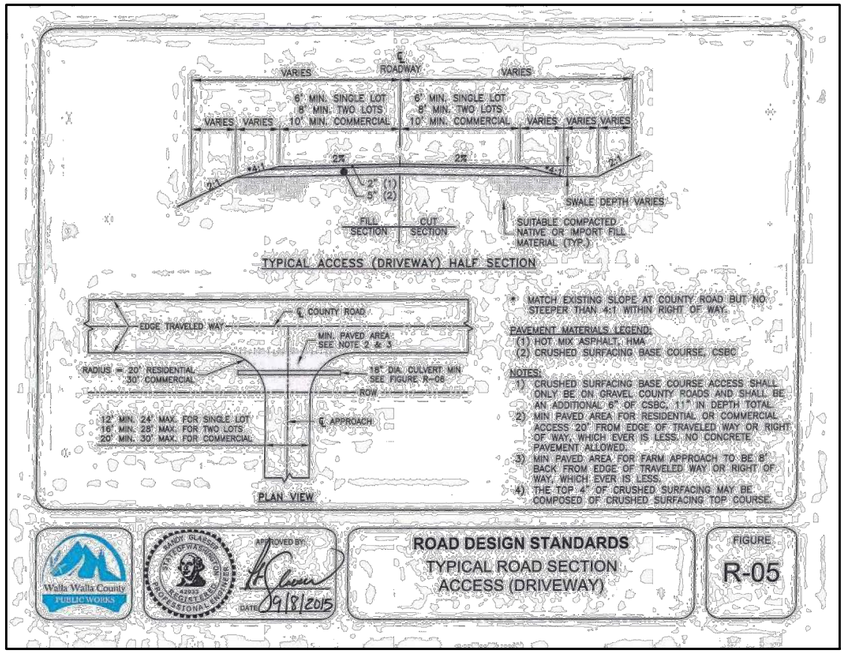

DRIVEWAY

1 NOT TO SCALE

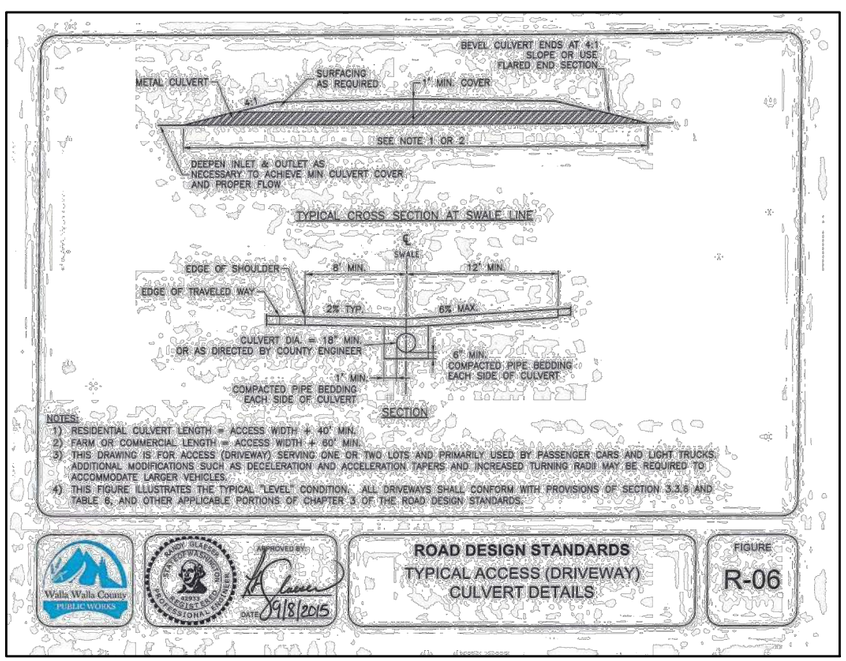

CULVERT DETAIL

2 NOT TO SCALE

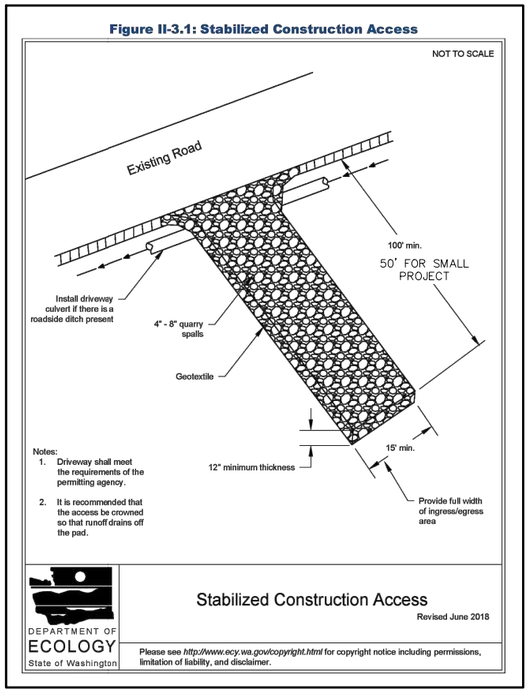

STABILIZED CONSTRUCTION ENTRANCE

3 NOT TO SCALE

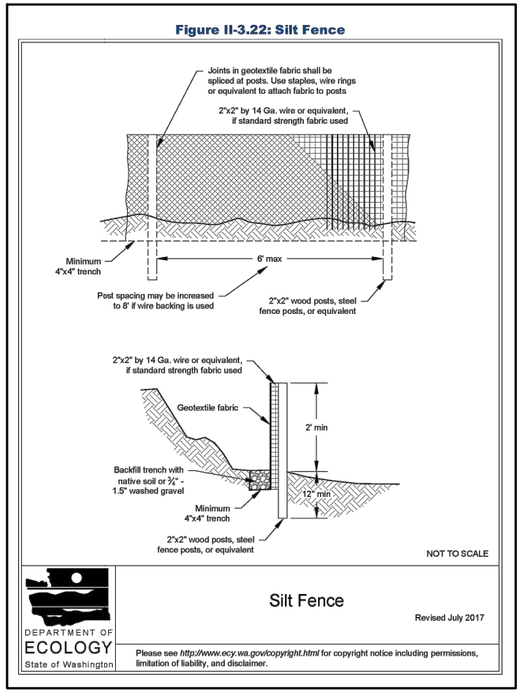

SILT FENCE

4 NOT TO SCALE

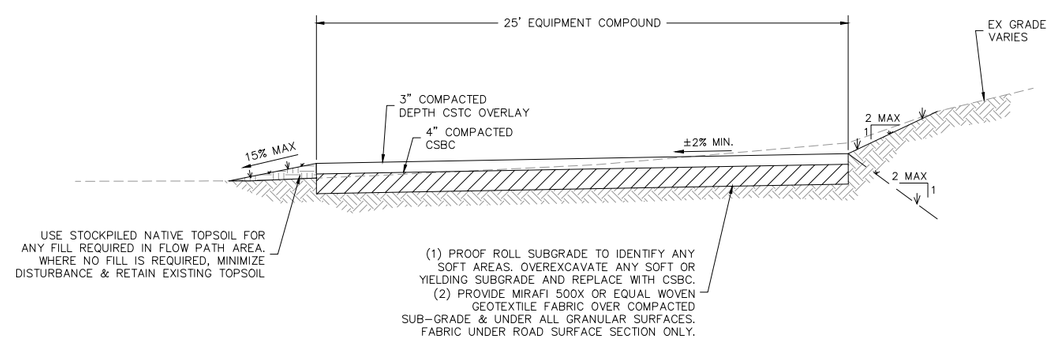

SECTION

A NOT TO SCALE

811 Know what's below. Call 48 hours before you dig.

DUNCANSON Company, Inc.
145 SW 155th Street, Suite 102
Seattle, Washington 98166
Phone 206.244.4141
Fax 206.244.4455

dish WIRELESS
2301 RUSSELL CREEK RD
WALLA WALLA, WA 99362
WALLA WALLA COUNTY

REVISIONS

NO.	DATE	DESCRIPTION	BY

SEGEG00028B DEPPING

DETAILS

DRAWN: DAS
DCI NO: 20135.054
DATE: 6/2/22

HAROLD M. DUNCANSON STATE OF WASHINGTON 29647 REGISTERED PROFESSIONAL ENGINEER

C3

3 OF 3 SHEETS

\\RAINIER\X\PROJECTS\2020 PROJECTS\20135 DISH\LDT 001-099\20135054 SEGEG00028B DEPPING\20135054 C3D\20135054 DEPPING MODEL.DWG